HONG YAN AUTO PARTS

NINGBO YINZHOU HONG YAN AUTO PARTS FACTORY



CATALOGUE 2017-2018


宁波市鄞州红岩汽配
Ning Bo Shi Yin Zhou Hong Yan Qi Pei

Company Profile

NINGBO YINZHOU HONGYAN AUTO PARTS FACTORY is a professional auto radiator plastic tank manufacturer in china who is capable of designing ,developing and production .The company situates in a beautiful and convenient location in NINGBO Yinzhou county .

Mainly produce **TOYOTA, HONDA, NISSAN, MITSUBISH, MAZDA, BMW, BENZ, HYNDAI, AUDI, GM, FORD, PEUGEOT** and so on. Our company has advanced producing equipment, and highly experienced technicians. Including advanced CNC, electric pulse, annual mold manufacture quantity is 100–120 sets.

We have long been in persistent pursuit for high quality, and meanwhile we already passed the **ISO/TS16949:2009** quality system certification. Development as well as innovation while striving for expanding its markets.

We are looking forward to working together with you to make tomorrow a better day. Welcome your enquiry if you are interested in our products.





注塑车间
Plastic-injecting workshop



模具库
Mold Warehouse



仓库（一）
Warehouse



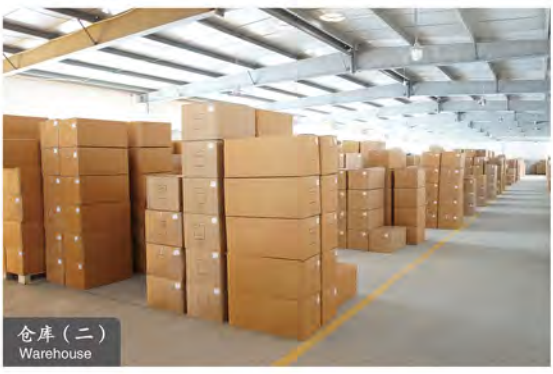

仓库（二）
Warehouse

CATALOG

ART.NO	DESCRIPTION	ABBREVIATIONS
1	ALFA	AF
2	AUDI	AU
3	BMW	BM
4	BYD	BY
5	CHRYSLER/DODGE/JEEP	CH
6	CHERY	CHE
7	CITROEN	CI
8	DAEWOO	DA
9	DAIHATSU	DAI
10	FIAT	FI
11	FORD/LINCOLN/MERCURY	FO
12	FORKLIFT	FL
13	GEELY	GE
14	CHEVROLET/BUICK/CADILLAC/SATURN/GMC	GM
15	HONDA/ACURA	HO
16	HOLDEN	HOL
17	HYUNDAI	HY
18	ISUZU	IS
19	IVECO	IV
20	JAGUAR	JA
21	KIA	KI
22	LADA	LA
23	MASERATI	MAS
24	MAZDA	MA
25	MERCEDES BENZ	ME
26	MITSUBISHI	MI
27	MORRIS GARAGES	MG
28	NISSAN/INFINITI	NI
29	OPEL	OP
30	PEUGEOT	PE
31	PORSCHE	PO
32	RENAULT	RE
33	LAND ROVER	RO
34	ROEWE	RW
35	SAAB	SA
36	SSANGYONG	SS
37	SUBARU	SU
38	SUZUKI	SUZ
39	TATA	TA
40	TOYOTA/LEXUS/HINO/SCION	TO
41	VOLKSWAGEN	VW
42	VOLVO	VO
43	CHINSES CAR	GCH
44	TRUCK	TR
45	INTERCOOLER TANK	IN

PRODUCT DESCRIPTION

TANK SIZE:R9X4X5X48X794

① Length

② Width

③ Base Height

④ Base Width

⑤ R

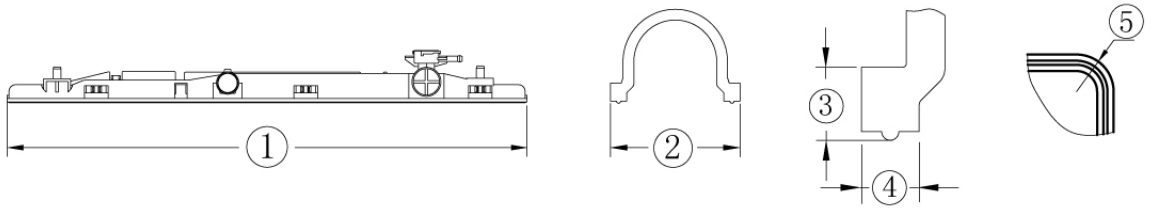

TANK SIZE:R9X4X5X33/48X794

Down or right width

Up or left width

 Without seal line

 Seal line in the middle

 Seal line inside

Model	DPI	NISSENS	OEM	Hongyan		Page
ACURA						
CL(97-98) 3.0L	1776			HO-0136	HO-0137	HO-24
RDX(13-14) 3.5L	2989			HO-0133	HO-0135	HO-24
TL(09-11) 3.5L	13179 +			HO-0133	HO-0134	HO-24
TLX（15-16)3.5L	13516			HO-0211	HO-0212	HO-36
TSX(04-05) 2.4L	2680 +		19010RBBE01 +	HO-0082	HO-0083	HO-14
TSX(09-14) 2.4/3.5L	13082			HO-0131	HO-0132	HO-24
INTEGRA(90-93)1.7/1.8L	292			HO-0241	HO-0242	HO-41
INTEGRA(90-93)1.7/1.8L				HO-0243	HO-0242	HO-41
INTEGRA(94-99）				HO-0205	HO-0206	HO-35
INTEGRA(94-99)	1568		19010P72010/091	HO-0123	HO-0234	HO-39
AUDI						
80(88-90) 2.0L	1090	60487A	893121251	AU-0040	AU-0041	AU-7
80/90(91-) 1.6/1.9/2.0L	1992	60465A	8A0121251	AU-0029	AU-0030	AU-6
80/90(91-) 1.6/1.9/2.0L	1993	60448A	8A0121251A	AU-0029	AU-0030	AU-6
100(90-) 1.6L		60460	4A0121251/E	AU-0021	AU-0022	AU-5
100(90-) 2.8L		60458	4A0121251G/J	AU-0023	AU-0024	AU-5
A1(10-15)		640012	6R0121253 +	VW-0055	VW-0056	VW-9
A1(10-15)				VW-0076	VW-0077	VW-13
A3(00-03) 1.8/2.0L	2265 +	652011	1E0121253 +	VW-0014	VW-0015	VW-3
A3(00-03) 1.8/2.0L				VW-0016	VW-0015	VW-3
A3(00-03) 1.8/2.0L				VW-0017	VW-0015	VW-3
A3(00-03) 1.8/2.0L				VW-0018	VW-0015	VW-3
A3(00-03) 1.8/2.0L				VW-0014	VW-0034	VW-7
A3(03-) 1.6L		65277A	1K0121251P +	AU-0027	AU-0028	AU-5
A3(03-13) 1.9L		65280A	1K0121251AA +	VW-0028	VW-0029	VW-6
A3(03-13) 1.9L				VW-0030	VW-0029	VW-6
A3(04-08) 2.0L	2822	65281A	1K0121251AB +	VW-0039	VW-0040	VW-7
A3(04-15) 1.9L		65279A	1K0121251BB/CS +	VW-0024	VW-0025	VW-5
A3(04-15) 1.9L				VW-0026	VW-0025	VW-5
A3(12-15)		64106	5Q0121251EC	VW-0053	VW-0054	VW-9
A3(05-10) 1.4/1.6/1.8/1.9L			1K0121251AT/DN/AA/BB/AP	AU-0073	AU-0074	AU-12
A3				VW-0129	VW-0130	VW-20
A4/S4(94-) 1.6/1.8/2.0L	2192	60849	8D012125AP/BC	AU-0001	AU-0002	AU-1
A4/S4(94-) 1.6/1.8/2.0L				AU-0003	AU-0002	AU-1
A4/S4(96-01) 1.8L	2034	60229 +	BD0121251BC	AU-0001	AU-0004	AU-1
A4/S4(96-01) 1.8/2.8L	2648		8D0121251B	AU-0005	AU-0006	AU-1
A4/S4(96-01) 1.8/2.8L				AU-0007	AU-0006	AU-2
A4/S4(96-01) 1.8/2.8L				AU-0005	AU-0008	AU-2
A4/S4（00-05）3.0/3.2L		60306A	8E0121251C	AU-0019	AU-0071	AU-12
A4/S4(02-08) 1.8/2.0L	2556		8E0121251L	AU-0009	AU-0010	AU-2
A4/S4(03-08) 1.8/4.2L	2557		8E012125A +	AU-0009	AU-0011	AU-2
A4/S4(02-08) 3.0/3.2L	2590	60307A	8E0121251M/S/AR	AU-0012	AU-0013	AU-3
A4/S4(02-08) 3.0/3.2L			8E0121251M/S/AR	AU-0019	AU-0020	AU-4
A4/S4(04-) 2.0L		60235A	4F0121251Q	AU-0015	AU-0016	AU-3
A4/S4(04-) 2.0L				AU-0017	AU-0016	AU-3
A4/S4(09-14) 1.8/2.0L	13188	60321 +	8K0121151K +	AU-0031	AU-0032	AU-6
A4/S4(11-14) 3.0/3.2L	13278	60317 +	8R0121251A	AU-0033	AU-0034	AU-6
A4/S4（96-01）1.8/2.8L	2034		BD0121251BC	AU-0053	AU-0055	AU-10
A4/S4(00-)		60300A	8E0121251P	AU-0061	AU-0062	AU-11

Model	DPI	NISSENS	OEM	Hongyan		Page
A4/S4(10-14)2.0L		13188+	8K0121251H	AU-0046	AU-0034	AU-8
A4/S4(08-14) 1.8/2.0L	13188	60321	8K0121251K +	AU-0072	AU-0032	AU-12
A4/S4（94-）1.6/1.8L	2192		8D012125AP/BC	AU-0053	AU-0054	AU-9
A4/S4(94-95)		60495	4B0121251AF +	AU-0067	AU-0068	AU-11
A5(10-14) 1.8/2.0/3.2L	13188	60321 +	8K0121151K +	AU-0031	AU-0032	AU-6
A5(12-14) 3.0L	13278	60317 +	8R0121251A	AU-0033	AU-0034	AU-6
A5/S5(08-14) 1.8/2.0L	13188	60321	8K0121251K +	AU-0072	AU-0032	AU-12
A6/S6(97-) 1.8/2.0L	2192	60849	8D012125AP/BC	AU-0001	AU-0002	AU-1
A6/S6(97-) 1.8/2.0L				AU-0003	AU-0002	AU-1
A6/S6(98-04) 2.7/2.8L	2648		8D0121251B	AU-0005	AU-0006	AU-1
A6/S6(98-04) 2.7/2.8L				AU-0007	AU-0006	AU-2
A6/S6(98-04) 2.7/2.8L				AU-0005	AU-0008	AU-2
A6/S6(02-05) 3.0/3.2L	2590	60307A	8E0121251M/S/AR	AU-0012	AU-0013	AU-3
A6/S6(02-05) 3.0/3.2L			8E0121251M/S/AR	AU-0019	AU-0020	AU-4
A6/S6(04-) 2.0L		60235A	4F0121251Q	AU-0015	AU-0016	AU-3
A6/S6(04-) 2.0L				AU-0017	AU-0016	AU-3
A6/S6(04-) 2.0L		60237A	4F0121251R	AU-0015	AU-0018	AU-4
A6/S6(04-) 2.0L				AU-0017	AU-0018	AU-4
A6/S6(04-) 2.4/2.8/3.0/3.2L		60234A	4F0121251L/T	AU-0012	AU-0014	AU-3
A6/S6(12-14) 3.0L	13278	60317 +	8R0121251A	AU-0033	AU-0034	AU-6
A6/S6(01-04)3.0/3.2L		60306A	8E0121251C	AU-0019	AU-0071	AU-12
A6/S6(01-)1.8L	2192		8D012125AP/BC	AU-0053	AU-0054	AU-9
A6/S6(04-)2.7L				AU-0042	AU-0043	AU-8
A6/S6(97-)1.8L	2192		8D012125AP/BC	AU-0053	AU-0054	AU-9
A7(12-14) 3.0L	13278	60317 +	8R0121251A	AU-0033	AU-0034	AU-6
A8				AU-0063	AU-0064	AU-11
A8(97-)3.0L			4H0121251C	AU-0069	AU-0070	AU-12
CABRIOLET(91-) 1.9/2.0L	1992	60465A	8A0121251	AU-0029	AU-0030	AU-6
COUPE(88-) 2.0L	1992	60465A	8A0121251	AU-0029	AU-0030	AU-6
COUPE(88-) 2.0L	1993	60448A	8A0121251A	AU-0029	AU-0030	AU-6
Q3(13-15)		60352		VW-0057	VW-0058	VW-10
Q5(10-14) 3.0/3.2L	13278	60317 +	8R0121251A	AU-0033	AU-0034	AU-6
Q7(07-14) 3.0/3.6/4.2L	2756 +		7L0121253/A +	AU-0036	AU-0037	AU-7
Q7(07-14) 3.0/3.6/4.2L		65276A		AU-0038	AU-0039	AU-7
TT(99-06) 1.8L	2265 +	652011	1E0121253 +	VW-0014	VW-0015	VW-3
TT(99-06) 1.8L				VW-0016	VW-0015	VW-3
TT(99-06) 1.8L				VW-0017	VW-0015	VW-3
TT(99-06) 1.8L				VW-0018	VW-0015	VW-3
TT(99-06) 1.8L				VW-0014	VW-0034	VW-7
TT(07-14) 1.8/2.0L	2822	65281A	1K0121251AB +	VW-0039	VW-0040	VW-7
TT(08-13) 1.9L		65280A	1K0121251AA +	VW-0028	VW-0029	VW-6
TT(08-13) 1.9L				VW-0030	VW-0029	VW-6
TT(09-15) 1.9L		65279A	1K0121251BB/CS +	VW-0024	VW-0025	VW-5
TT(09-15) 1.9L				VW-0026	VW-0025	VW-5
TT(09-15)		60352		VW-0057	VW-0058	VW-10
AUDI		60353	8E0121251AP	AU-0025	AU-0026	AU-5
AUDI				AU-0033	AU-0035	AU-7
AUDI				AU-0031	AU-0044	AU-8
AUDI				AU-0045	AU-0002	AU-8
AUDI				AU-0047	AU-0048	AU-9
AUDI				AU-0049	AU-0050	AU-9

Model	DPI	NISSENS	OEM	Hongyan		Page
AUDI				AU-0051	AU-0052	AU-9
AUDI				AU-0058	AU-0059	AU-10
AUDI					AU-0060	AU-10
AUDI				AU-0056		AU-10
AUDI				AU-0065	AU-0066	AU-11
AUDI				AU-0075	AU-0026	AU-13
BMW						
5(12-13)2.0L	13353			BM-0047	BM-0046	BM-9
5(12-13)				BM-0045	BM-0046	BM-9
7(78-86)733/735	298 +		o14381127	BM-0050	BM-0051	BM-9
X3(11-15)		60811	17117593842	BM-0048	BM-0049	BM-9
1(10-13)130/135	2941		17117547059	BM-0038	BM-0040	BM-8
2(13-15)		60815	1711760056	BM-0041	BM-0042	BM-8
2(13-15)		60814 +	17117600511	BM-0043	BM-0042	BM-8
2(13-15)	13394	60817	17117618807	BM-0041	BM-0044	BM-8
3(07-13)335	2941		17117547059	BM-0038	BM-0040	BM-8
3(13-15)		60815	1711760056	BM-0041	BM-0042	BM-8
3(13-15)		60814 +	17117600511	BM-0043	BM-0042	BM-8
3(13-15)	13394	60817	17117618807	BM-0041	BM-0044	BM-8
4(13-15)		60815	1711760056	BM-0041	BM-0042	BM-8
4(13-15)		60814 +	17117600511	BM-0043	BM-0042	BM-8
4(13-15)	13394	60817	17117618807	BM-0041	BM-0044	BM-8
X1(12-15)	2941		17117547059	BM-0038	BM-0040	BM-8
Z4(09-15)	2941		17117547059	BM-0038	BM-0040	BM-8
1(08-13)116/120/128	2882	60786A	7521046/936	BM-0035	BM-0037	BM-7
1(08-13)116/120/128				BM-0035	BM-0036	BM-7
3(06-13)323/325/328/330	2882	60786A	7521046/936	BM-0035	BM-0037	BM-7
3(06-13)323/325/328/330				BM-0035	BM-0036	BM-7
3(07-13)335	2973	60785A	17117558480 +	BM-0038	BM-0039	BM-7
X1(09-15)	2882	60786A	7521046/936	BM-0035	BM-0035	BM-7
X1(09-15)	2973	60785A	17117558480 +	BM-0038	BM-0039	BM-7
Z4(09-14)	2882	60786A	7521046/936	BM-0035	BM-0037	BM-7
Z4(09-14)				BM-0035	BM-0036	BM-7
Z4(09-15)	2973	60785A	17117558480 +	BM-0038	BM-0039	BM-7
BMW				BM-0033	BM-0034	BM-7
BMW				BM-0070		BM-12
3(01-05)320/323/325/328/330	2635			BM-0028	BM-0020	BM-6
3(01-05)320/323/325/328/330	2635			BM-0029	BM-0020	BM-6
X5(00-06) 3.0L		60789A	1439104 +	BM-0032	BM-0031	BM-6
X5(00-06)4.4/4.6/4.8L	2593	60787A	7544668	BM-0065	BM-0031	BM-11
X5(00-08) 4.4/4.6/4.8L	2593 +	60787A +	1439101/3 +	BM-0030	BM-0031	BM-6
X5(01-08)3.0L	2593	60787A	7544668	BM-0065	BM-0031	BM-11
Z4(03-06) 2.5/3.0L	2635			BM-0028	BM-0020	BM-6
Z4(03-06) 2.5/3.0L	2635			BM-0029	BM-0020	BM-6
X3(04-10) 2.5/3.0L	2771	60803A	17113400013 +	BM-0024	BM-0020	BM-5
X3(04-10) 2.5/3.0L				BM-0025	BM-0020	BM-5
X3(04-10) 2.5/3.0L				BM-0026	BM-0020	BM-5
X3(04-10) 2.5/3.0L				BM-0027	BM-0020	BM-5
X3(07-10) 3.0L				BM-0060	BM-0062	BM-11
X3（11-17）2.0/3.0L	13370	60809	17117593843	BM-0066	BM-0067	BM-12

Model	DPI	NISSENS	OEM	Hongyan		Page
X3（11-17）2.0/3.0L				BM-0068	BM-0067	BM-12
3(01-05)320/323/325/328/330	2636	60782A	9071518	BM-0019	BM-0020	BM-4
3(01-05)320/323/325/328/330				BM-0021	BM-0020	BM-4
3(01-05)320/323/325/328/330				BM-0022	BM-0020	BM-4
3(01-05)320/323/325/328/330				BM-0023	BM-0020	BM-4
Z4(03-06) 2.5/3.0L	2636	60782A	9071518	BM-0019	BM-0020	BM-4
Z4(03-06) 2.5/3.0L				BM-0021	BM-0020	BM-4
Z4(03-06) 2.5/3.0L				BM-0022	BM-0020	BM-4
5(96-98)528/540	1401	60752A	1702969 +	BM-0013	BM-0012	BM-3
5(96-98)528/540				BM-0014	BM-0015	BM-3
5(99-05)525/528/530/540	2284 +	60648A	1436060/1	BM-0016	BM-0017	BM-3
5(99-05)525/528/530/540	2284 +	60648A	1436060/1	BM-0018	BM-0017	BM-3
5(96-98)528 2.8L	1401 +	60752A	1702969 +	BM-0013	BM-0069	BM-12
5(95-98)540/740 4.4L	1401 +	60752A	1702969 +	BM-0013	BM-0069	BM-12
5(94-99)750/850 5.4L	1401 +	60752A	1702969 +	BM-0013	BM-0069	BM-12
5(11-)				BM-0045	BM-0074	BM-13
5(11-)				BM-0045	BM-0075	BM-13
7(95-98)740/750	1401	60752A	1702969 +	BM-0013	BM-0012	BM-3
7(95-98)740/750				BM-0014	BM-0015	BM-3
3(87-93)320/324/325	941 +	60618A	1723825 +	BM-0009	BM-0002	BM-2
3(87-93)320/324/325	941 +	60618A	1723825 +	BM-0010	BM-0004	BM-2
5(80-)525/528		60742	1712005	BM-0008	BM-0007	BM-2
5(92-93)530	941 +	60618A	1723825 +	BM-0009	BM-0002	BM-2
5(92-93)530	941 +	60618A	1723825 +	BM-0010	BM-0004	BM-2
5(96-98)528/540			1737711/813 +	BM-0011	BM-0012	BM-2
7(92-94)730	941 +	60618A	1723825 +	BM-0009	BM-0002	BM-2
7(92-94)730	941 +	60618A	1723825 +	BM-0010	BM-0004	BM-2
7(95-98)740/750			1737711/813 +	BM-0011	BM-0012	BM-2
X3(07-10) 3.0L	13277	60807	17113415693	BM-0060	BM-0061	BM-11
M3(88-91)2.3L	967	60667	1711222591	BM-0063	BM-0064	BM-11
3(84-87)325	825 +		2152011210	BM-0052	BM-0053	BM-10
MINI(02-05) COOPER				BM-0056	BM-0057	BM-10
MINI(04-) COOPER			7788753	BM-0054	BM-0055	BM-10
MINI COOPER(14-17)2.0L L4	13544		17117617635 +	BM-0076	BM-0077	BM-13
MINI COOPER				BM-0072	BM-0073	BM-13
MINI COOPER				BM-0072	BM-0073	BM-13
MINI(07) CLUBMAN			8MK376754591	BM-0058	BM-0059	BM-10
3(82-)316/318		60735A	1723537 +	BM-0006	BM-0007	BM-1
3(90-)316/318/320323/325		60735A	1723537 +	BM-0006	BM-0007	BM-1
3(91-99) 318	978		1723528 +	BM-0001	BM-0002	BM-1
3(91-99) 318	978		1723528 +	BM-0003	BM-0004	BM-1
5(88-)518/520/525		60735A	1723537 +	BM-0006	BM-0007	BM-1
5(89-95)525	978		1723528 +	BM-0001	BM-0002	BM-1
5(89-95)525	978		1723528 +	BM-0003	BM-0004	BM-1
5(95-) 520/523/528		60607A		BM-0001	BM-0005	BM-1
5(11-)				BM-0045	BM-0074	BM-13
5(11-)				BM-0045	BM-0075	BM-13
Z3(96-98) 1.9L	978		1723528 +	BM-0001	BM-0002	BM-1
Z3(96-98) 1.9L	978		1723528 +	BM-0003	BM-0004	BM-1

BUICK

Model	DPI	NISSENS	OEM	Hongyan		Page
ALLURE(05-09) 3.6/5.3L	2827		10344419	GM-0115	GM-0116	GM-22
ALLURE(05-09) 3.8L	2710			GM-0168	GM-0169	GM-33
CENTURION(71-73) 5.7/7.5L	161 +			GM-0059	GM-0145-1	GM-27
CENTURY(73-90) 3.8/5.0/5.7/7.5L	161 +			GM-0059	GM-0145-1	GM-27
CENTURY(92-96) 2.2/3.3L	1342			GM-0037-1	GM-0188	GM-36
CENTURY(92-96) 3.1/3.3L	1340			GM-0059	GM-0188	GM-36
CENTURY(97-99) 3.1/3.8L	1887 +	691051	52472846/65	GM-0007	GM-0008	GM-2
CENTURY(97-99) 3.1/3.8L				GM-0007	GM-0008-1	GM-2
CENTURY(00-05) 3.1L	2516		52381096	GM-0010	GM-0011	GM-2
CENTURY				GM-0007	GM-0009	GM-2
COMMERCIAL(91-93) 5.0/5.7L	1210			GM-0029	GM-0145	GM-27
COMMERCIAL(91-93) 5.7L	1212			GM-0037	GM-0145	GM-27
COMMERCIAL CHASSIS(94-95) 5.7L	1517		52467762	GM-0027	GM-0028	GM-6
COMMERCIAL CHASSIS(94-95) 5.7L	1516		52467761 +	GM-0029	GM-0030	GM-6
ENCORE(13-15)1.4L	13361		95136075 +	GM-0259	GM-0260	GM-48
ENVISION(15-)1.5L			22942968	GM-0278	GM-0279	GM-52
ENVISION(15-)2.0L			22942965	GM-0278	GM-0280	GM-52
ENVISION			22942968	GM-0278	GM-0279	GM-52
EXCELLE(04-10) 1.6/1.8L	2788	61634	96553243 +	GM-0003	GM-0004	GM-1
EXCELLE(04-10)1.6/1.8L	2788	61634	96553243/244/423	GM-0314	GM-0004	GM-57
GL8				GM-0255	GM-0256	GM-48
LACROSSE(05-09) 3.8L	2710			GM-0168	GM-0169	GM-33
LACROSSE（10-15）2.4/3.6L	13146			GM-0275	GM-0273	GM-51
LESABRE(85-87) 3.0/3.8L	852 +		3090378 +	GM-0045-1	GM-0053	GM-12
LESABRE(91-96) 3.8L	769 +			GM-0037	GM-0040	GM-8
LESABRE(91-96) 3.8L	778 +			GM-0037	GM-0041	GM-9
LESABRE(00-05) 3.8L	2347 +		52487030	GM-0015	GM-0016	GM-3
PARD AVENUE(91-96) 3.8L	769 +			GM-0037	GM-0039	GM-8
PARD AVENUE(91-96) 3.8L	778 +			GM-0037	GM-0041	GM-9
RAINIER(04-07) 4.2L	2458		52485546	GM-0069	GM-0070	GM-16
RAINIER(04-07) 5.3L	2563		15162213	GM-0071	GM-0072	GM-16
RENDEZVOUS(02-07) 3.5L	2562		1031317/8	GM-0094	GM-0095	GM-19
RENDEZVOUS(02-07) 3.5L				GM-0094	GM-0095-1	GM-19
REGAL(88-90) 2.8/3.1L	658			GM-0098	GM-0162	GM-31
REGAL(97-99) 3.8L	1887 +	691051	52472846/65	GM-0007	GM-0008	GM-2
REGAL(97-99) 3.8L	1887 +	691051	52472846/65	GM-0007	GM-0008-1	GM-2
REGAL(00-05) 3.8L	2516		52381096	GM-0010	GM-0011	GM-2
REGAL(11-13) 2.0L	13217		13241729	GM-0129	GM-0130	GM-24
REGAL（11-15)2.0L/2.4/3.6L	13146			GM-0275	GM-0273	GM-51
REGAL				GM-0007	GM-0009	GM-2
RIVIERA(95-99)3.8L	1777 +			GM-0321	GM-0322	GM-59
ROADMASTER(91-93) 5.0/5.7L	1210			GM-0029	GM-0145	GM-27
ROADMASTER(91-93) 5.7L	1212			GM-0037	GM-0145	GM-27
ROADMASTER(94-96) 5.7L	1517		52467762	GM-0027	GM-0028	GM-6
ROADMASTER(94-96) 5.7L	1516		52467761 +	GM-0029	GM-0030	GM-6
SKYHAWK(82-89) 2.0L	977			GM-0033	GM-0185	GM-35
SKYLARK(89-91) 2.3L	1049			GM-0153	GM-0154	GM-30
SKYLARK(89-91) 2.5/3.3L	1043 +			GM-0153	GM-0154-1	GM-30
SKYLARK(94-98) 2.4/3.1L	1515		52466038	GM-0096	GM-0097	GM-19
SKYLARK(94-98) 2.3/2.4/3.1L	1515		52466038	GM-0164	GM-0156	GM-32
VERANO（12-15）	13246			GM-0274	GM-0270	GM-51

Model	DPI	NISSENS	OEM	Hongyan		Page
TERRAZA(02-07) 3.5L	2562		1031317/8	GM-0094	GM-0095	GM-19
TERRAZA(02-07) 3.5L				GM-0094	GM-0095-1	GM-19
TERRAZA(06-07) 3.9L	2881			GM-0199	GM-0200	GM-38
BUICK				GM-0244	GM-0245	GM-46
BUICK				GM-0244	GM-0246	GM-46
BUICK				GM-0271	GM-0272	GM-50
BUICK				GM-0271	GM-0273	GM-50
BUICK				GM-0275	GM-0272	GM-51
BUICK				GM-0310	GM-0311	GM-57
BYD						
F3				BY-0001	BY-0002	BY-1
F3				BY-0003	BY-0004	BY-1
BYD				BY-0005	BY-0006	BY-1
S6				BY-0007	BY-0008	BY-1
CADILLAC						
ATS(13-15)2.0/2.5/3.6L	13349 +		22966122/3/4	GM-0288	GM-0252	GM-53
ATS（13-15）2.0/2.5/3.6L	13349 +		22966122/3/4	GM-0251	GM-0252	GM-47
CATERA(97-01) 2.5/3.0L		63073A	52482600 +	OP-0001	OP-0002	OP-1
CATERA(00-01)3.6L	1881 +			GM-0323	GM-0324	GM-59
CIMARRON(84-86) 2.0L	977			GM-0033	GM-0185	GM-35
CIMARRON(88-89)2.8L	612			GM-0285	GM-0287	GM-53
CADILLAC CT6(2016-)2.0L				GM-0289	GM-0290	GM-53
CTS(03-04) 3.2L	2565		25740114 +	GM-0107	GM-0108	GM-21
CTS(04-07) 2.8/3.0/6.0L	2731		19129908 +	GM-0105	GM-0106	GM-21
CTS(08-14) 3.0/3.6L	13108		15932855 +	GM-0135	GM-0136	GM-25
CTS(08-14) 3.0/3.6L				GM-0135	GM-0136-1	GM-25
CTS(14-15)2.0/2.5/3.6L	13349 +		22966122/3/4	GM-0251	GM-0252	GM-47
CTS(14-15)2.0/2.5/3.6L	13349 +		22966122/3/4	GM-0288	GM-0252	GM-53
ELDORADO(95-02) 4.6L	1842		52470913 +	GM-0157	GM-0158	GM-31
ESCALADE(99-00) 5.7L	624 +		52460847/7217	GM-0012	GM-0013	GM-3
ESCALADE(99-00) 5.7L	1693 +		52467232/9471	GM-0012	GM-0013-1	GM-3
ESCALADE(05-11) 5.3L	2366 +		15193113/2/1	GM-0023	GM-0024	GM-5
ESCALADE(10-13)6.0L	13419			GM-0334	GM-0335	GM-61
ESCALADE(10-13)6.0L	13419			GM-0334	GM-0336	GM-61
DEVILLE(96-99) 4.6L	1842		52470913 +	GM-0157	GM-0158	GM-31
FLEETWOOD(94-96) 5.7L	1517		52467762	GM-0027	GM-0028	GM-6
FLEETWOOD(94-96) 5.7L	1516		52467761 +	GM-0029	GM-0030	GM-6
SCALADE(02-11) 6.2L	2370 +		15193114	GM-0021	GM-0022	GM-5
SEVILLE(93-97) 4.6L	1842		52470913 +	GM-0157	GM-0158	GM-31
SEVILLE(98-00) 4.6L	2279 +			GM-0193	GM-0194	GM-37
SEVILLE(98-00) 4.6L				GM-0193-1	GM-0194	GM-37
SEVILLE(00-) 4.6L	2369			GM-0193	GM-0196	GM-37
SEVILLE(01-04) 4.6L	2513 +			GM-0195	GM-0194-1	GM-37
SRX(10-11)3.0L	13240			FO-0347	FO-0348	FO-55
SRX(10-11)3.0L	13240			FO-0349	FO-0348	FO-55
SRX(10-15)3.6L	13241		20926497 +	GM-0249	GM-0250	GM-47
XLR(04-09) 1.4/4.6L	2715		10332373	GM-0111	GM-0112	GM-21
XT5(15-)				GM-0300	GM-0301	GM-55
XTS(13-15) 3.6L	13366			GM-0229	GM-0230	GM-44

Model	DPI	NISSENS	OEM	Hongyan		Page
XTS(13-15) 3.6L				GM-0229	GM-0230-1	GM-44
XTS(13-15)3.6L	13366		22747160	GM-0291	GM-0230	GM-54
CHERY						
A5				CHE-0001	CHE-0002	CHE-1
A11				CHE-0028	CHE-0029	CHE-4
A15				CHE-0030	CHE-0031	CHE-5
TIGGO				CHE-0003	CHE-0004	CHE-1
TIGGO				CHE-0005	CHE-0006	CHE-1
TIGGO				CHE-0014	CHE-0004	CHE-2
TIGGO				CHE-0032	CHE-0013	CHE-5
CHERY				CHE-0007	CHE-0008	CHE-1
CHERY				CHE-0009	CHE-0010	CHE-2
CHERY				CHE-0011	CHE-0010	CHE-2
CHERY				CHE-0012	CHE-0013	CHE-2
CHERY				CHE-0015	CHE-0016	CHE-3
CHERY				CHE-0017	CHE-0016	CHE-3
CHERY				CHE-0018	CHE-0019	CHE-3
CHERY				CHE-0020	CHE-0021	CHE-3
CHERY				CHE-0022	CHE-0023	CHE-4
CHERY				CHE-0024	CHE-0025	CHE-4
CHERY				CHE-0026	CHE-0027	CHE-4
CHEVROLET						
ASTRO(95-) 4.3L	1688 +		52458028 +	GM-0031-1	GM-0032	GM-6
ASTRO(96-05) 4.3L	1786 +		52472906	GM-0031	GM-0032	GM-6
AVALANCHE(99-11) 5.3L	2370 +		15193114	GM-0021	GM-0022	GM-5
AVALANCHE(99-11) 5.3L				GM-0021-1	GM-0022	GM-5
AVEO(04-08) 1.6L	2873	61636	96443478 +	DA-0007	DA-0008	DA-2
AVEO(09-15) 1.6L	13097		96942182	DA-0027	DA-0029	DA-5
AVEO(09-15) 1.6L				DA-0027	DA-0028	DA-5
AVEO（11-15）1.2L/1.4T		61678	95460091/94 +	GM-0267	GM-0269	GM-49
AVEO（11-）1.4L			95316032 +	GM-0267	GM-0268	GM-49
AVEO			95460093	GM-0131	GM-0132	GM-24
BERETTA(87-88) 2.8L	229			GM-0150	GM-0151	GM-29
BERETTA(90-91) 2.2/3.1L	1074			GM-0150	GM-0152	GM-29
BERETTA(90-91) 2.2/3.1L				GM-0150	GM-0152-1	GM-30
BERETTA(92-95) 2.2/3.1L	1341 +			GM-0155	GM-0156	GM-30
BERETTA(94-96) 2.2/3.1L	1515		52466038	GM-0164	GM-0156	GM-32
BERETTA(94-98) 2.4/3.1L	1515		52466038	GM-0096		GM-19
BLAZE(73-)7.4L	730			GM-0327	GM-0328	GM-59
BLAZER(87-)5.0L	1599			GM-0325	GM-0326	GM-59
BLAZER(94-95) 4.3L	1532 +		52462546/7/8/9	GM-0035	GM-0036	GM-7
BLAZER(94-95) 4.3L				GM-0035	GM-0036-1	GM-7
BLAZER(94-95) 4.3L				GM-0035	GM-0036-2	GM-7
BLAZER(96-05) 4.3L	1825 +		52472963	GM-0033	GM-0034	GM-7
BLAZER(96-05)4.3L				GM-0033	GM-0317	GM-58
C10(75-86)5.7/6.6/7.4L	730			GM-0327	GM-0328	GM-59
C10(81-86)5.0/5.7L	1599			GM-0325	GM-0326	GM-59
C1500(94-98) 5.7L	1693 +		52467232/9471	GM-0012	GM-0013-1	GM-3
C1500(94-02) 6.5L	1523 +		524608678 +	GM-0017-1	GM-0020	GM-4

Model	DPI	NISSENS	OEM	Hongyan		Page
C2500(92-93) 7.4L	1218 +		52460853/7215/9436	GM-0017	GM-0019	GM-4
C2500(94-98) 5.7L	1693 +		52467232/9471	GM-0012	GM-0013-1	GM-3
C2500(94-02) 6.5L	1523 +		524608678 +	GM-0017-1	GM-0020	GM-4
C2500(94-98) 7.4L	1521 +			GM-0017	GM-0018	GM-4
C2500(94-98) 7.4L				GM-0017	GM-0018-1	GM-4
C3500(94-98) 7.4L	1521 +			GM-0017	GM-0018	GM-4
C3500(94-98) 7.4L				GM-0017	GM-0018-1	GM-4
C7500(97-02) 6.0/7.2/8.1L	2110 +			GM-0170	GM-0171	GM-33
C7500(97-02) 6.0/7.2/8.1L				GM-0172	GM-0173	GM-33
C7500(97-02) 6.0/7.2/8.1L				GM-0172	GM-0174	GM-34
C7500(97-02) 6.0/7.2/8.1L				GM-0175	GM-0176	GM-34
CAMARO(82-86) 2.5/5.0L	965			GM-0055	GM-0056	GM-12
CAMARO(82-86)2.5/5.0L	924			GM-0055	GM-0338	GM-61
CAMARO(82-92) 3.1/5.0/5.7L	951 +		3092164	GM-0055	GM-0057	GM-13
CAMARO(93-02) 3.4/3.8L	1485 +		52452847 +	GM-0065	GM-0066	GM-15
CAMARO(93-02) 5.7L	1486		52458219 +	GM-0067	GM-0068	GM-15
CAMARO(10-11) 3.6L	13141			GM-0221-1	GM-0222	GM-42
CAMARO(10-11) 6.2L	13142			GM-0221	GM-0222	GM-42
CAMARO(12-15)3.6L	13341		22786864 +	GM-0302	GM-0303	GM-56
CAMARO(12-15)3.6L	13344 +		22762595 +	GM-0302	GM-0304	GM-56
CAPRICE(91-93) 5.0/5.7L	1210			GM-0029	GM-0145	GM-27
CAPRICE(91-93) 4.3/5.0/5.7L	1212			GM-0037	GM-0145	GM-27
CAPRICE(94-96) 4.7L	1516		52467761 +	GM-0029	GM-0030	GM-6
CAPRICE(94-96) 5.7L	1517		52467762	GM-0027	GM-0028	GM-6
CAPTIVA SPORT(10-15) 2.4/3.0L	13057			GM-0119	GM-0120	GM-23
CAPTIVA SPORT(10-15) 2.4/3.0L		616905		GM-0119-1	GM-0120	GM-23
CAVALIER(88-94) 2.2L	977			GM-0033	GM-0185	GM-35
CAVALIER BASE(89-94)3.1L	768			GM-0285	GM-0286	GM-53
CAVALIER(95-02) 2.2/2.4L	1687			GM-0159	GM-0160	GM-31
CAVALIER(02-05) 2.2L	2518			GM-0159	GM-0161	GM-31
COBALT(05-10) 2.2/2.4L	2608	69461	52387630 +	GM-0081	GM-0082	GM-17
COLORADO(06-12) 2.9/3.7L	2707			GM-0181	GM-0182	GM-35
COLORADO(09-12) 5.3L	2855			GM-0223	GM-0224	GM-43
COLORADO（15-）2.5L	13501		94778493	GM-0263	GM-0264	GM-49
COLORADO（15-）3.6L	13500		94778491	GM-0265	GM-0266	GM-49
COLORADO				GM-0247	GM-0248	GM-47
CORSICA(87-88) 2.8L	229			GM-0150	GM-0151	GM-29
CORSICA(90-91) 2.2/3.1L	1074			GM-0150	GM-0152	GM-29
CORSICA(90-91) 2.2/3.1L				GM-0150	GM-0152-1	GM-30
CORSICA(92-95) 2.2/3.1L	1341 +			GM-0155	GM-0156	GM-30
CORSICA(94-98) 2.4/3.1L	1515		52466038	GM-0096	GM-0097	GM-19
CORVETTE(84-90) 5.7L	829			GM-0149	GM-0036-1	GM-29
CORVETTE(97-04) 5.7L	1885			GM-0143	GM-0144	GM-26
CORVETTE(09-13) 6.2L	2714			GM-0146	GM-0112	GM-27
CORVETTE（14-15）6.2L	13462 +		20979405 +	GM-0261	GM-0262	GM-48
CRUZE（09-15）1.6L		61677		GM-0213	GM-0270	GM-50
CRUZE（10-15）1.4L/1.7L/1.8L	13197			GM-0274	GM-0214	GM-50
CRUZE(10-14) 1.4/1.8L	13197			GM-0213	GM-0214	GM-40
CRUZE(14-15)2.0L	13471			GM-0274	GM-0337	GM-61
CRUZE(15-)1.8L				GM-0293	GM-0294	GM-54
CRUZE(16-)1.4L				GM-0281	GM-0282	GM-52

Model	DPI	NISSENS	OEM	Hongyan		Page
CRUZE(16-)				GM-0283	GM-0284	GM-52
ENCLAVA(08-13) 3.6L	13007		20772532 +	GM-0117	GM-0118	GM-22
EPICA TAXI				GM-0133	GM-0134	GM-25
EQUINOX(05-) 3.4L	2764		15246426 +	GM-0089	GM-0090	GM-18
EQUINOX(06-09) 3.4L	2879		15781369	GM-0237	GM-0238	GM-45
EQUINOX(10-15) 2.4L	13103		19130404 +	GM-0239	GM-0240	GM-45
EXPRESS(96-) 5.7L	1467 +			GM-0055	GM-0049	GM-13
EXPRESS(96-02) 6.5L	2043		15766917	GM-0012	GM-0014	GM-3
EXPRESS(03-05) 5.3L				GM-0037	GM-0147	GM-28
EXPRESS(03-05) 5.3L	2712			GM-0037	GM-0147-1	GM-28
EXPRESS(03-04) 4.8/6.0L	2713			GM-0012	GM-0197	GM-38
EXPRESS(03-04) 4.8/6.0L				GM-0012	GM-0198	GM-38
EXPRESS(06-14) 5.3L	2992			GM-0037	GM-0148	GM-28
EXPRESS(06-14) 5.3L				GM-0037	GM-0148-1	GM-28
EXPRESS(06-14) 5.3L				GM-0037	GM-0148-2	GM-29
EXPRESS(06-15) 6.6L	2935		15751216 +	GM-0235	GM-0236	GM-45
G10/20/30(92-96) 5.7L	1467 +			GM-0055	GM-0049	GM-13
HHR(06-11) 2.2/2.4L	2850		22727322	GM-0109	GM-0110	GM-21
IMPALA(94-96) 5.7L	1517		52467762	GM-0027	GM-0028	GM-6
IMPALA(94-96) 5.7L	1516		52467761 +	GM-0029	GM-0030	GM-6
IMPALA(00-05) 3.8L	2516		52381096	GM-0010	GM-0011	GM-2
IMPALA(04-05) 3.8L	2710			GM-0168	GM-0169	GM-33
IMPALA(06-11) 3.5L	2827		10344419	GM-0115	GM-0116	GM-22
IMPALA(06-11) 3.5/3.9L	2837			GM-0207	GM-0208	GM-39
IMPALA(12-13)3.6L	13326			GM-0332	GM-0333	GM-60
IMPALA(14-15) 2.5L	13328 +			GM-0227	GM-0228	GM-43
IMPALA(14-15)2.4/3.6L	13146			GM-0275	GM-0273	GM-51
IMPALA(14-15)2.5L	13328 +			GM-0227	GM-0292	GM-54
K1500(94-02) 6.5L	1523 +		524608678 +	GM-0017-1	GM-0020	GM-4
K2500(92-93) 7.4L	1218 +		52460853/7215/9436	GM-0017	GM-0019	GM-4
K2500(94-02) 6.5L	1523 +		524608678 +	GM-0017-1	GM-0020	GM-4
K2500(94-98) 7.4L	1521 +			GM-0017	GM-0018	GM-4
K2500(94-98) 7.4L				GM-0017	GM-0018-1	GM-4
K3500(92-93) 7.4L	1218 +		52460853/7215/9436	GM-0017	GM-0019	GM-4
K3500(94-98) 7.4L	1521 +			GM-0017	GM-0018	GM-4
K3500(94-98) 7.4L				GM-0017	GM-0018-1	GM-4
KALOS(09-) 1.4/1.6L				DA-0025	DA-0026	DA-5
KALOS(09-)				DA-0040	DA-0041	DA-7
LACETTI(04-10) 1.6/1.8L	2788	61634	96553243 +	GM-0003	GM-0004	GM-1
LACETTI(04-10)1.6/1.8L	2788	61634	96553243/244/423	GM-0314	GM-0004	GM-57
LLV(87-93)2.5L	206 +				GM-0319	GM-58
LLV(94-95) 2.2L	741		3090605	GM-0100	GM-0101	GM-20
LUMINA(90-93) 2.2/2.5/3.1L	658			GM-0098	GM-0162	GM-31
LUMINA(91-93) 3.1/3.4L	1206 +		3058895	GM-0098	GM-0099	GM-20
LUMINA(92-95) 3.1L	1046 +		52452672/3	GM-0037-1	GM-0040	GM-9
LUMINA(92-96) 3.8L	1476		52460728	GM-0037	GM-0038	GM-8
LUMINA(92-96) 3.8L	1475		52456258	GM-0037-1	GM-0038	GM-8
LUMINA(92-96) 3.8L					GM-0038-1	GM-8
LUV(97-05) 2.2/2.3L	1531		3090605	GM-0102	GM-0101-1	GM-20
MALIBU(97-03) 2.4/3.1L	2264 +			GM-0203	GM-0204	GM-39
MALIBU(97-03) 2.4/3.1L	2039			GM-0203	GM-0205	GM-39

Model	DPI	NISSENS	OEM	Hongyan		Page
MALIBU(04-05) 2.2L	2520			GM-0203	GM-0206	GM-39
MALIBU(04-08) 2.2L	2765 +		52486987	GM-0083	GM-0084	GM-17
MALIBU(04-10) 3.5/3.9L	2727		52494386	GM-0085	GM-0086	GM-18
MALIBU(13-14)2.4/3.6L	13146			GM-0275	GM-0273	GM-51
MALIBU(13-15) 2.0/2.5L	13328 +			GM-0227	GM-0228	GM-43
MALIBU(13-15)2.0/2.5L	13328 +			GM-0227	GM-0292	GM-54
CV MALIBU(16-)1.5L				GM-0295	GM-0296	GM-54
CV MALIBU(16-)1.5L				GM-0295	GM-0297	GM-55
CV MALIBU(16-)1.5L				GM-0295	GM-0298	GM-55
CV MALIBU(16-)1.5L				GM-0295	GM-0299	GM-55
MALIBU				GM-0257	GM-0258	GM-48
MATIZ(05-10) 0.8/1.0L		61630	96591475 +	GM-0103	GM-0104	GM-20
MONTE CARLO(00-05) 3.4L	2516		52381096	GM-0010	GM-0011	GM-2
MONTE CARLO(06-07) 5.3L	2837			GM-0207	GM-0208	GM-39
NUBIRA(03-10) 1.6/1.8L	2788	61634	96553243 +	GM-0003	GM-0004	GM-1
NUBIRA(03-10)1.6/1.8L	2788	61634	96553243/244/423	GM-0314	GM-0004	GM-57
ORLANDO（14-15）	13246			GM-0274	GM-0270	GM-51
P30(94-) 4.3L	726 +		5246532/4	GM-0059	GM-0060	GM-14
S10(82-93) 2.8L	741		3090605	GM-0100	GM-0101	GM-20
S10(85-93)2.5L	206 +				GM-0319	GM-58
S10(88-94) 4.3L	705			GM-0098	GM-0163	GM-32
S10(94-03) 2.2L	1531		3090605	GM-0102	GM-0101-1	GM-20
S10(94-05) 4.3L	1532 +		52462546/7/8/9	GM-0035	GM-0036	GM-7
S10(94-05) 4.3L				GM-0035	GM-0036-1	GM-7
S10(94-05) 4.3L				GM-0035	GM-0036-2	GM-7
SALL(11-) 1.2L				GM-0123	GM-0124	GM-23
SALL(11-) 1.4L				GM-0121	GM-0122	GM-23
SILVERADO(99-11) 4.8/5.3L	2366 +		15193113/2/1	GM-0023	GM-0024	GM-5
SILVERADO(99-11) 5.3L	2370 +		15193114	GM-0021	GM-0022	GM-5
SILVERADO(99-11) 5.3L				GM-0021-1	GM-0022	GM-5
SILVERADO(09-13)6.0L				GM-0334	GM-0336	GM-61
SILVERADO(10-13)6.0L	13419			GM-0334	GM-0335	GM-61
SILVERADO 1500(14-15)	13397 +			GM-0139	GM-0140	GM-26
SILVERADO 2500(01-02) 8.1L	2538			GM-0166	GM-0167	GM-32
SILVERADO 2500(01-02) 8.1L				GM-0166	GM-0167	GM-32
SILVERADO 3500(01-02) 8.1L	2538			GM-0166-1	GM-0167-1	GM-33
SILVERADO 3500(01-02) 8.1L				GM-0166-1	GM-0167-1	GM-33
SILVERADO(01-05) 6.6L	2510 +			GM-0189	GM-0190	GM-36
SILVERADO(06-10) 6.6L	2857 +			GM-0186	GM-0187	GM-35
SILVERADO（11-14）2500/3500 6.0L	13301		25838891	GM-0253	GM-0254	GM-47
SILVERADO(11-16)6.6L	13244			GM-0312	GM-0313	GM-57
SONIC（11-15）		61678	95460091/94 +	GM-0267	GM-0269	GM-49
SONIC(12-15) 1.4L	13248		95158677 +	GM-0225	GM-0226	GM-43
SONIC(12-15) 1.4L				GM-0225	GM-0226-1	GM-43
SONIC(12-15) 1.6/1.8L	13247		95022259	GM-0137	GM-0138	GM-25
SONIC(12-15) 1.6/1.8L				GM-0233	GM-0234	GM-45
SPARK(05-10) 0.8/1.0L		61630	96591475 +	GM-0103	GM-0104	GM-20
SPARK(10-15) 1.2L		61679 +	96984450	GM-0241	GM-0242	GM-46
SPARK(10-15) 1.2L				GM-0241-1	GM-0243	GM-46
SSR(03-06) 5.3/6.0L	2714			GM-0146	GM-0112	GM-27
SUBURBAN(99-11) 4.8/5.3L	2366 +		15193113/2/1	GM-0023	GM-0024	GM-5

Model	DPI	NISSENS	OEM	Hongyan		Page
SUBURBAN(99-11) 6.0L	2370 +		15193114	GM-0021	GM-0022	GM-5
SUBURBAN(99-11) 6.0L				GM-0021-1	GM-0022	GM-5
SUBURBAN 2500(01-02) 8.1L	2538			GM-0166	GM-0167	GM-32
SUBURBAN 2500(01-02) 8.1L				GM-0166-1	GM-0167-1	GM-33
SUBURBAN（11-13）2500 6.0L	13301		25838891	GM-0253	GM-0254	GM-47
TAHOE(99-11) 5.3L	2366 +		15193113/2/1	GM-0023	GM-0024	GM-5
TAHOE(99-11) 5.3L	2370 +		15193114	GM-0021	GM-0022	GM-5
TAHOE(99-11) 5.3L				GM-0021-1	GM-0022	GM-5
TAHOE(08-13)6.0L	13419			GM-0334	GM-0335	GM-61
TAHOE(08-13)6.0L	13419			GM-0334	GM-0336	GM-61
TRAILBLAZER(02-09) 4.2L	2458		52485546	GM-0069	GM-0070	GM-16
TRAILBLAZER(02-09) 5.3L	2563		15162213	GM-0071	GM-0072	GM-16
TRACKER(89-93)1.6L	1118		1770060A11	SUZ-0119	SUZ-0120	SUZ-18
TRACKER(98-08) 1.6/2.0L	2087 +	64159	1770056B12 +	SUZ-0008	SUZ-0009	SUZ-2
TRACKER(98-08) 1.6/2.0L				SUZ-0008	SUZ-0010	SUZ-2
TRAVERSE(09-12) 3.6L	13007		20772532 +	GM-0117	GM-0118	GM-22
UPLANDER(02-07) 3.5L	2562		1031317/8	GM-0094	GM-0095	GM-19
UPLANDER(02-07) 3.5L				GM-0094	GM-0095-1	GM-19
UPLANDER(06-07) 3.9L	2881			GM-0199	GM-0200	GM-38
VENTURE(97-00) 3.4L	1887 +	691051	52472846/65	GM-0007	GM-0008	GM-2
VENTURE(97-00) 3.4L				GM-0007	GM-0008-1	GM-2
VENTURE(02-07) 3.5L	2562		1031317/8	GM-0094	GM-0095	GM-19
VENTURE(02-07) 3.5L				GM-0094	GM-0095-1	GM-19
VENTURE				GM-0007	GM-0009	GM-2
CHEVROLET(16-)				GM-0307	GM-0308	GM-56
CHEVROLET				GM-0001	GM-0002	GM-1
CHEVROLET				GM-0005	GM-0006	GM-1
CHEVROLET				GM-0005-1	GM-0006-1	GM-1
CHEVROLET				GM-0037	GM-0042	GM-9
CHEVROLET				GM-0037	GM-0042-1	GM-9
CHEVROLET				GM-0037	GM-0043	GM-10
CHEVROLET				GM-0037	GM-0044	GM-10
CHEVROLET				GM-0045	GM-0046	GM-10
CHEVROLET				GM-0045	GM-0047	GM-10
CHEVROLET				GM-0045	GM-0048	GM-11
CHEVROLET				GM-0045	GM-0049	GM-11
CHEVROLET				GM-0045	GM-0050	GM-11
CHEVROLET				GM-0045-1	GM-0051	GM-11
CHEVROLET				GM-0045-1	GM-0052	GM-12
CHEVROLET				GM-0045-1	GM-0054	GM-12
CHEVROLET				GM-0055	GM-0058	GM-13
CHEVROLET				GM-0059	GM-0040	GM-13
CHEVROLET	1370 +			GM-0059	GM-0061	GM-14
CHEVROLET	1352 +			GM-0062	GM-0054	GM-14
CHEVROLET	434 +			GM-0063	GM-0050	GM-14
CHEVROLET	1353 +			GM-0063	GM-0054	GM-15
CHEVROLET	1690 +			GM-0063	GM-0064	GM-15
CHEVROLET				GM-0077	GM-0078	GM-17
CHEVROLET				GM-0079	GM-0080	GM-17
CHEVROLET	1422 +		52474360	GM-0087	GM-0088	GM-18
CHEVROLET	2462 +		15246275	GM-0091	GM-0092	GM-18

Model	DPI	NISSENS	OEM	Hongyan		Page
CHEVROLET			15821838	GM-0093	GM-0092	GM-19
CHEVROLET				GM-0113	GM-0114	GM-22
CHEVROLET				GM-0113	GM-0114-1	GM-22
CHEVROLET				GM-0125	GM-0126	GM-24
CHEVROLET				GM-0127	GM-0128	GM-24
CHEVROLET	1700			GM-0141	GM-0142	GM-26
CHEVROLET				GM-0141-1	GM-0142	GM-26
CHEVROLET	2421			GM-0007	GM-0165	GM-32
CHEVROLET				GM-0177	GM-0178	GM-34
CHEVROLET				GM-0179	GM-0180	GM-34
CHEVROLET				GM-0183	GM-0184	GM-35
CHEVROLET				GM-0191	GM-0192	GM-36
CHEVROLET	2969			GM-0201	GM-0202	GM-38
CHEVROLET				GM-0209	GM-0210	GM-40
CHEVROLET				GM-0209-1	GM-0210	GM-40
CHEVROLET				GM-0211	GM-0212	GM-40
CHEVROLET	2607			GM-0215	GM-0216	GM-41
CHEVROLET				GM-0215-1	GM-0216	GM-41
CHEVROLET				GM-0215	GM-0216-1	GM-41
CHEVROLET				GM-0217	GM-0218	GM-41
CHEVROLET				GM-0217-1	GM-0218-1	GM-42
CHEVROLET	13043			GM-0231	GM-0232	GM-44
CHEVROLET	13043			GM-0231-1	GM-0232	GM-44
CHRYSLER						
200(11-14) 2.4/3.6L	2951	61019	5159249AA	CH-0071	CH-0072	CH-11
300(98-04) 3.5L	2183 +	69016	5010359 +	CH-0039	CH-0040	CH-6
300(05-08) 2.7/3.5/5.7/6.1L	2766 +	61014A	5317691AA	CH-0027	CH-0028	CH-5
300(05-08) 2.7/3.5/5.7/6.1L				CH-0089	CH-0090	CH-14
300(05-08) 2.7/3.5/5.7/6.1L			05137692AA	CH-0091	CH-0092	CH-14
300(05-08)2.7/3.5/5.7/6.1L	2766 +			CH-0178	CH-0179	CH-26
300(09-14) 2.7/3.5/5.7L	13158		68050131AA	CH-0128	CH-0129	CH-19
300(09-16)2.7/3.5/3.6L	13157 +			CH-0150	CH-0151	CH-22
ASPEN(07-09) 4.7/5.7L	2738 +		52029044A/C +	CH-0118	CH-0119	CH-18
CARAVAN（84-89）	881			CH-0159	CH-0160	CH-23
DODGE CARAVAN(91-92)3.0L	1387			CH-0130	CH-0177	CH-26
CIRRUS(95-00) 2.0/2.4/2.5L	1702	60981A	4596399AA +	CH-0097	CH-0098	CH-15
CIRRUS(95-00) 2.0/2.4/2.5L				CH-0099	CH-0100	CH-15
CIRRUS(95-00) 2.0/2.4/2.5L				CH-0101	CH-0100	CH-15
CIRRUS(07-10) 2.4/3.5L	2951	61019	5159249AA	CH-0071	CH-0072	CH-11
CONCORDE(93-96)3.3/3.5L	1390	609771	4592052	CH-0010	CH-0011	CH-2
CONCORDE(98-04) 2.7/3.2/3.5L	2183 +	69016	5010359 +	CH-0039	CH-0040	CH-6
GRAND VOYAGER(91-92)3.0L	1387			CH-0130	CH-0177	CH-26
GRAND VOYAGER(96-00)3.8L	1862	60999A	4682587AB +	CH-0012	CH-0013	CH-2
GRAND VOYAGER(96-00)3.8L	1850	60984	4682785 +	CH-0014	CH-0015	CH-3
INTREPID(93-97) 3.3/3.5L	1390	609771	4592052	CH-0010	CH-0011	CH-2
INTREPID(98-04) 2.7/3.2/3.5L	2183 +	69016	5010359 +	CH-0039	CH-0040	CH-6
LEBARON（83-89）2.2L	883			CH-0161	CH-0162	CH-24
NEW YORKER(88-90)2.5/3.0/3.3L	1077			CH-0175	CH-0176	CH-26
NEW YORKER（91-93）3.3/3.8L						
NEW YORKER(94-96)3.5L	1390	609771	4592052	CH-0010	CH-0011	CH-2

Model	DPI	NISSENS	OEM	Hongyan		Page
PACIFICA(04-06) 3.5/3.8/4.0L	2702	610142 +	5102435AA	CH-0024	CH-0025	CH-4
PACIFICA(07-08) 3.8L	13178		68002782AA	CH-0026	CH-0025	CH-4
PACIFICA(07-08) 4.0L	2702	610142 +	5102435AA	CH-0024	CH-0025	CH-4
PT CRUISER(01-09) 2.2L		61024	05073578AB	CH-0050	CH-0051	CH-8
PT CRUISER(01-09) 2.4L	2677		05096190AA	CH-0048	CH-0049	CH-8
PT CRUISER(01-09) 2.4L	2298	61002A	5017404AB +	CH-0088	CH-0049	CH-14
SEBRING(95-99) 2.0L	2023		MR127910 +	MI-0094	MI-0095	MI-19
SEBRING(95-99) 2.0L	2023		MR127910 +	MI-0094	MI-0095-1	MI-19
SEBRING(96-00) 2.4/2.5L	1702	60981A	4596399AA +	CH-0097	CH-0098	CH-15
SEBRING(96-00) 2.4/2.5L				CH-0099	CH-0100	CH-15
SEBRING(96-00) 2.4/2.5L				CH-0101	CH-0100	CH-15
SEBRING(01-03) 2.4L	2438 +		MR373103 +	MI-0087	MI-0089	MI-17
SEBRING(01-03) 2.4L	2438 +		MR373103 +	MI-0087	MI-0089-1	MI-17
SEBRING(01-03) 2.7/3.0L	2410 +		MR373104 +	MI-0087	MI-0088	MI-17
SEBRING(01-03) 2.7/3.0L	2410 +		MR373104 +	MI-0087	MI-0088-1	MI-17
SEBRING(01-06) 2.4/2.7L	2323		4596399AA +	CH-0095	CH-0096	CH-15
SEBRING(07-10) 2.4/3.5L	2951	61019	5159249AA	CH-0071	CH-0072	CH-11
STRATUS(02-03)				CH-0109	CH-0110	CH-17
TOWN&COUNTRY(90-92) 3.3L	1125 +		431264 +	CH-0130	CH-0131	CH-19
TOWN&COUNTRY(90-92)3.3L	1387			CH-0130	CH-0177	CH-26
TOWN&COUNTRY(93-95) 3.8L	1388		4644266	CH-0104	CH-0105	CH-16
TOWN&COUNTRY(93-95) 3.8L	1400		4546460/1/2/3 +	CH-0106	CH-0107	CH-16
TOWN&COUNTRY(96-00)3.3/3.8L	1862	60999A	4682587AB +	CH-0012	CH-0013	CH-2
TOWN&COUNTRY(96-00)3.3/3.8L	1850	60984	4682785 +	CH-0014	CH-0015	CH-3
TOWN&COUNTRY(01-04) 3.3/3.8	2311	61005	4809168/219/225/226	CH-0085	CH-0086	CH-13
TOWN&COUNTRY(01-) 2.8L		61018A	5142488AA	CH-0122	CH-0123	CH-18
TOWN&COUNTRY(05-07) 3.3/3.8	2795		04677523AA	CH-0052	CH-0053	CH-8
TOWN&COUNTRY(08-14) 3.6/4.0	13063		4677751AA +	CH-0077	CH-0078	CH-12
VOYAGER(95-00) 2.5L		60985	4798013	CH-0126	CH-0127	CH-19
VOYAGER(01-02) 2.4L	2312	61004	4809238/238AC +	CH-0085	CH-0087	CH-13
VOYAGER(01-) 2.8L		61018A	5142488AA	CH-0122	CH-0123	CH-18
VOYAGER(01-04) 3.3L	2311	61005	4809168/219/225/226	CH-0085	CH-0086	CH-13
VOYAGER(05-07) 3.3L	2795		04677523AA	CH-0052	CH-0053	CH-8
CHRYSLER				CH-0152	CH-0153	CH-22
CHRYSLER				CH-0157	CH-0158	CH-23
CHRYSLER				CH-0165		CH-24
CITROEN						
C3(02-10) 1.4/1.6L		61279	1330C1 +	PE-0053	PE-0056	PE-10
C4 AIRXORSS（12-）2.0L	636033		1611245980	MI-0214	MI-0215	MI-37
C4 AIRXORSS（12-）1.6HDL		636034	1611262880	MI-0216	MI-0215	MI-38
C4 AIRXORSS（12-）1.6L		636032	1611262980	MI-0217	MI-0215	MI-38
JUMPER(04-) 2.0L		61862	1330V9 +	FI-0031	FI-0032	FI-5
JUMPER(04-) 1.9/2.0/2.5/2.8L		61390A +	1330L2 +	FI-0031	FI-0033	FI-5
JUMPER(06-) 2.2/3.0L		63555A	1342588080 +	FI-0058	FI-0059	FI-9
RELAY(04-) 2.0L		61862	1330V9 +	FI-0031	FI-0032	FI-5
RELAY(04-) 1.9/2.0/2.5/2.8L		61390A +	1330L2 +	FI-0031	FI-0033	FI-5
RELAY(06-) 2.2/3.0L		63555A	1342588080 +	FI-0058	FI-0059	FI-9
XANTIA(93-03) 1.6/1.8/2.0L		61303	133019 +	CI-0001	CI-0002	CI-1
XANTIA(93-03) 1.9/2.0L		61304 +	133018 +	CI-0001	CI-0004	CI-1
XANTIA(93-03) 1.6/1.8/2.0L		61387	1301M1 +	CI-0003	CI-0002	CI-1

Model	DPI	NISSENS	OEM	Hongyan		Page
XANTIA(94-98)1.9L		61301	1301R5	CI-0003	CI-0004	CI-1
XSARA(98-00)		61313A +	133045/6 +	CI-0005	CI-0006	CI-2
XSARA(98-00)				CI-0005	CI-0007	CI-2
XSARA(98-00)				CI-0008	CI-0007	CI-2
XSARA(98-00)				CI-0009	CI-0007	CI-2
ZX(92-97)		61313A +	133045/6 +	CI-0005	CI-0006	CI-2
ZX(92-97)				CI-0005	CI-0007	CI-2
ZX(92-97)				CI-0008	CI-0007	CI-2
ZX(92-97)				CI-0009	CI-0007	CI-2
DAEWOO						
CIELO(95-97) 1.5L		61651A	96144847	DA-0009	DA-0010	DA-2
CIELO(95-97) 1.5L				DA-0011	DA-0012	DA-2
ESPERO(95-97) 1.5/1.8/2.0L		61656 +	96109532/A +	DA-0017	DA-0018	DA-3
EVANDA(02-) 2.0L				DA-0013	DA-0014	DA-3
EVANDA(02-07)) 2.0L	13000	61639	96278701 +	DA-0015	DA-0016	DA-3
EVANDA(02-07)) 2.0L	13000	61639	96278701 +	DA-0015	DA-0016-1	DA-3
LEGANZA(99-02) 2.2L	2381 +	616671	96181369 +	DA-0001	DA-0002	DA-1
LEGANZA(99-02) 2.2L				DA-0003	DA-0002	DA-1
LEGANZA(99-02) 2.2L				DA-0003-1	DA-0002	DA-1
MAGNUS(02-) 2.0L				DA-0013	DA-0014	DA-3
MAGNUS(02--07) 2.0L	13000	61639	96278701 +	DA-0015	DA-0016	DA-3
MAGNUS(02--07) 2.0L	13000	61639	96278701 +	DA-0015	DA-0016-1	DA-3
MATIZ(98-01) 0.8L		61653	96314162	GM-0073	GM-0074	GM-16
MATIZ(01-08) 0.8/1.0L		61646	96322941	GM-0075	GM-0076	GM-16
NEXIA(95-97) 1.5L		61651A	96144847	DA-0009	DA-0010	DA-2
NEXIA(95-97) 1.5L				DA-0011	DA-0012	DA-2
NUBIRA(97-) 1.5/1.6/1.8L	2384	616591	96351931	DA-0004	DA-0005	DA-1
NUBIRA(97-) 1.5/1.6/1.8L				DA-0006	DA-0005	DA-2
NUBIRA(99-02) 2.0L	2381 +	616671	96181369 +	DA-0001	DA-0002	DA-1
NUBIRA(99-02) 2.0L				DA-0003	DA-0002	DA-1
NUBIRA(99-02) 2.0L				DA-0003-1	DA-0002	DA-1
RACER(94-)				DA-0019	DA-0020	DA-4
RACER(94-)				DA-0021	DA-0020	DA-4
DAEWOO				DA-0022	DA-0023	DA-4
DAEWOO				DA-0024	DA-0023	DA-4
DAEWOO				DA-0030	DA-0031	DA-5
DAEWOO				DA-0032	DA-0033	DA-6
DAEWOO				DA-0034	DA-0035	DA-6
DAEWOO				DA-0036	DA-0037	DA-6
DAEWOO			1770060D40	DA-0038	DA-0039	DA-6
DAEWOO				DA-0042	DA-0043	DA-7
DAIHATSU						
APPLAUSE(93-) 1.3L			1640087F37000	DAI-0007	DAI-0008	DAI-1
BEGO(05-11)			16400B1140	DAI-0036	DAI-0037	DAI-6
BOON(04-)			16400B1020/70	DAI-0038	DAI-0039	DAI-6
BOON(05-13) 1.3/1.5L		617548 +	16400B1010000 +	DAI-0014	DAI-0015	DAI-2
BOON			16400B1080	DAI-0062	DAI-0015	DAI-10
CHARADE(87-92) 1.0L	222	61752	1640087767000	DAI-0012	DAI-0013	DAI-2
CHARADE(87-92) 1.0L			1640087767000	DAI-0047	DAI-0048	DAI-8

Model	DPI	NISSENS	OEM	Hongyan		Page
CHARADE(87-92) 1.0L			1640087F11000 +	DAI-0049	DAI-0050	DAI-8
CHARADE(90-93) 1.3L			1640087F27000 +	DAI-0010	DAI-0011	DAI-2
CHARADE(93-) 1.3L			1640087F37000	DAI-0007	DAI-0008	DAI-1
CHARADE(93-) 1.3L			1640087F33000 +	DAI-0007	DAI-0009	DAI-2
CHARADE(93-) 1.3L		61748	1640087776	DAI-0043	DAI-0044	DAI-7
CUORE(03-)		61739	16400B2120/2070	DAI-0055	DAI-0056	DAI-9
CUORE(03-)				DAI-0057	DAI-0058	DAI-9
CUORE(03-)				DAI-0059	DAI-0060	DAI-9
CUORE(03-)				DAI-0061	DAI-0060	DAI-9
CUORE(07-12)			16400B2190 +	DAI-0053	DAI-0054	DAI-8
HIJET(90-)				DAI-0040	DAI-0041	DAI-7
HIJET(90-)				DAI-0042	DAI-0041	DAI-7
HIJET(98-)			1640097503000 +	DAI-0051	DAI-0052	DAI-8
MIRA(90-98)			1640087256 +	DAI-0019	DAI-0020	DAI-3
MIRA(90-98)				DAI-0021	DAI-0020	DAI-3
MIRA(90-98)				DAI-0022	DAI-0020	DAI-4
MIRA(90-98)				DAI-0023	DAI-0020	DAI-4
MIRA(90-98)				DAI-0024	DAI-0020	DAI-4
MIRA(98-03)		61740	1640097202 +	DAI-0016	DAI-0017	DAI-3
MIRA(98-03)				DAI-0018	DAI-0017	DAI-3
MIRA(98-03)				DAI-0045	DAI-0046	DAI-7
MIRA(03-)		61739	16400B2120/2070	DAI-0055	DAI-0056	DAI-9
MIRA(03-)				DAI-0057	DAI-0058	DAI-9
MIRA(03-)				DAI-0059	DAI-0060	DAI-9
MIRA(03-)				DAI-0061	DAI-0060	DAI-9
MIRA(07-12)			16400B2190 +	DAI-0053	DAI-0054	DAI-8
MIRA CUORE(90-98)			1640087287 +	DAI-0025	DAI-0026	DAI-4
MIRA CUORE(90-98)				DAI-0027	DAI-0026	DAI-5
MIRA CUORE(90-98)				DAI-0028	DAI-0026	DAI-5
MIRA CUORE(90-98)				DAI-0029	DAI-0026	DAI-5
M0VE(98-05)		61740	1640097202 +	DAI-0016	DAI-0017	DAI-3
M0VE(98-05)				DAI-0018	DAI-0017	DAI-3
M0VE(98-05)				DAI-0045	DAI-0046	DAI-7
MOVE				DAI-0067		DAI-11
MOVE				DAI-0069		DAI-11
OPTI(98-05)		61740	1640097202 +	DAI-0016	DAI-0017	DAI-3
OPTI(98-05)				DAI-0018	DAI-0017	DAI-3
OPTI(98-05)				DAI-0045	DAI-0046	DAI-7
PRAMVKA(02-)				DAI-0073	DAI-0074	DAI-11
PYZAR(93-) 1.3L			1640087F37000	DAI-0007	DAI-0008	DAI-1
PYZAR(93-) 1.3L			1640087F33000	DAI-0007	DAI-0009	DAI-2
SIRION(05-13) 1.3/1.5L		617548 +	16400B1010000 +	DAI-0014	DAI-0015	DAI-2
TERIOS(97-00) 1.3L		61741A +	1640087402	DAI-0001	DAI-0002	DAI-1
TERIOS(97-00) 1.3L				DAI-0003	DAI-0004	DAI-1
TERIOS(97-00) 1.3L			1640087406	DAI-0005	DAI-0006	DAI-1
TERIOS(97-00)1.3L				DAI-0077	DAI-0078	DAI-12
TERIOS(97-00)1.3L				DAI-0079		DAI-12
TERIOS(05-11)			16400B1140	DAI-0036	DAI-0037	DAI-6
TERIOS(07-)				DAI-0032	DAI-0033	DAI-6
TERIOS(07-)				DAI-0034	DAI-0035	DAI-6
DAIHATSU				DAI-0030	DAI-0031	DAI-5

Model	DPI	NISSENS	OEM	Hongyan		Page
DAIHATSU				DAI-0075	DAI-0076	DAI-12
DAIHATSU				DAI-0063	DAI-0064	DAI-10
DAIHATSU				DAI-0063	DAI-0065	DAI-10
DAIHATSU				DAI-0063	DAI-0066	DAI-10
DAIHATSU				DAI-0071	DAI-0072	DAI-11
DAIHATSU				DAI-0081	DAI-0082	DAI-12
DODGE						
ATTITUDE(06-10) 1.4/1.6L	2896	67502 +	2531010 +	HY-0075	HY-0076	HY-13
ATTITUDE(12-14) 1.4/1.6L	13252 +	66756 +	253101R000 +	HY-0101	HY-0102	HY-16
AVENGER(95-99) 2.0L	2023		MR127910 +	MI-0094	MI-0095	MI-19
AVENGER(95-99) 2.0L	2023		MR127910 +	MI-0094	MI-0095-1	MI-19
AVENGER(11-12) 2.4/3.6L	2951	61019	5159249AA	CH-0071	CH-0072	CH-11
B1500(95-98) 3.9/5.2/5.9L	1707		52029630 +	CH-0055	CH-0056	CH-9
B1500(95-98) 3.9/5.2/5.9L	1707		52029630 +	CH-0055	CH-0056-1	CH-9
B2500(95-98) 3.9/5.2/5.9L	1707		52029630 +	CH-0055	CH-0056	CH-9
B2500(95-98) 3.9/5.2/5.9L	1707		52029630 +	CH-0055	CH-0056-1	CH-9
CARAVAN(90-92)2.5/3.3L	1125 +		431264 +	CH-0130	CH-0131	CH-19
CARAVAN(90-92)2.5/3.0L	1387			CH-0130	CH-0177	CH-26
CARAVAN(93-95)2.5/3.3L	1388		4644266	CH-0104	CH-0105	CH-16
CARAVAN(93-95)2.5/3.3L	1400		4546460/1/2/3 +	CH-0106	CH-0107	CH-16
CARAVAN(93-95)3.0L	1391		4644364/AB +	CH-0106	CH-0108	CH-16
CARAVAN（93-95）3.0L	1392		4644045 +	CH-0104	CH-0148	CH-22
CARAVAN(96-00)2.4/3.0/3.3L	1862	60999A	4682587AB +	CH-0012	CH-0013	CH-2
CARAVAN(96-00)2.4/3.0/3.3L	1850	60984	4682785 +	CH-0014	CH-0015	CH-3
CARAVAN(01-03) 3.3L	2311	61005	4809168/219/225/226	CH-0085	CH-0086	CH-13
CARAVAN(01-04) 2.4L	2312	61004	4809238/238AC +	CH-0085	CH-0087	CH-13
CARAVAN(05-07) 2.4L	2770		04677524AA	CH-0052	CH-0054	CH-8
CHALLENGER(77-83) 2.6L	700		MB007580 +	CH-0046	CH-0047	CH-7
CHARGER(05-08)2.7/3.5/5.7/6.1L	2766 +			CH-0178	CH-0179	CH-26
CHARGER(06-08) 2.7/3.5/5.7/6.1L	2766 +	61014A	5317691AA	CH-0027	CH-0028	CH-5
CHARGER(06-08) 2.7/3.5/5.7/6.1L				CH-0089	CH-0090	CH-14
CHARGER(06-08) 2.7/3.5/5.7/6.1L			05137692AA	CH-0091	CH-0092	CH-14
CHARGER(09-13) 5.7L	13158		68050131AA	CH-0128	CH-0129	CH-19
CHALLENGER （14-16 ）3.6/5.7/6.4L	13157 +			CH-0150	CH-0151	CH-22
COLT(93-94) 2.4L	1921		MB924249	MI-0010	MI-0011	MI-3
COLT(93-94) 2.4L	1736		MB924251	MI-0012	MI-0011	MI-3
COLT(93-95) 1.5/1.8L	1393 +		MB66056 +	MI-0013	MI-0014	MI-3
COLT(93-95) 1.5/1.8L	1956		MB660566 +	MI-0015	MI-0014	MI-3
DAKOTA (89-99) 2.5L	981 +		4266892 +	CH-0132	CH-0133	CH-20
DAKOTA（92-96）3.9/5.2L	1709			CH-0144	CH-0145	CH-21
DAKOTA (00-04) 2.5/3.9/4.7/5.9L	2294	69451	52028816AB +	CH-0037	CH-0038	CH-6
DAKOTA(05-10) 3.7/4.7L	2883			MI-0068	MI-0069	MI-13
DART(13-14) 1.4/2.0/2.4L	13323		55111483AC	CH-0124	CH-0125	CH-19
DAYTONA（84-89）2.2/2.5L	883			CH-0161	CH-0162	CH-24
DAYTONA（91-93）2.2/2.5/3.0L	1108	60983		CH-0146	CH-0147	CH-21
DURANGO(97-00) 3.9/5.2/5.9L	1905 +	60998	52028816AB/AD	CH-0083	CH-0084	CH-13
DURANGO(97-00) 3.9/5.2/5.9L	1905 +	60998	52028816AB/AD	CH-0083	CH-0084-1	CH-13
DURANGO(00-03) 4.7/5.9L	2294	69451	52028816AB +	CH-0037	CH-0038	CH-6
DURANGO(04-09) 4.7/5.7L	2738 +		52029044A/C +	CH-0118	CH-0119	CH-18
DURANGO(11-14) 3.6/5.7L	13200	61033	55038001AG	CH-0081	CH-0082	CH-12

Model	DPI	NISSENS	OEM	Hongyan		Page
DYNASTY(88-90)2.5/3.0/3.3L	1077			CH-0175	CH-0176	CH-26
DYNASTY（90-93）2.5/3L	1109	69002		CH-0138	CH-0139	CH-20
GRAND CARAVAN(93-95) 3.3/3.8L	1388		4644266	CH-0104	CH-0105	CH-16
GRAND CARAVAN(93-95) 3.3/3.8L	1400		4546460/1/2/3 +	CH-0106	CH-0107	CH-16
GRAND CARAVAN(93-95) 3.3/3.8L	1391		4644364/AB +	CH-0106	CH-0108	CH-16
GRAND CARAVAN(05-07) 3.3/3.8L	2795		04677523AA	CH-0052	CH-0053	CH-8
GRAND CARAVAN(08-14) 3.3/3.6L	13063		4677751AA +	CH-0077	CH-0078	CH-12
INTREPID(93-97)3.3/3.5L	1390	609771	4592052	CH-0010	CH-0011	CH-2
INTREPID(98-04) 2.7/3.2/3.5L	2183 +	69016	5010359 +	CH-0039	CH-0040	CH-6
JOURNEY(09-14) 2.4/3.6L	13084	61027	68038238AA	CH-0079	CH-0080	CH-12
MAGNUM(06-08) 2.7/3.5/5.7/6.1L	2766 +	61014A	5317691AA	CH-0027	CH-0028	CH-5
MAGNUM(05-08) 2.7/3.5/5.7/6.1L				CH-0089	CH-0090	CH-14
MAGNUM(05-08) 2.7/3.5/5.7/6.1L			05137692AA	CH-0091	CH-0092	CH-14
MAGNUM(05-08)2.7/3.5/5.7/6.1L	2766 +			CH-0178	CH-0179	CH-26
NEON(95-99) 1.8/2.0L	1548 +	609941	4740097 +	CH-0041	CH-0042	CH-6
NEON(95-99) 1.8/2.0L	1548 +	609941	4740097 +	CH-0041	CH-0042-1	CH-7
NEON(95-99) 2.0L	2196		4546900	CH-0102	CH-0103	CH-16
NEON(00-03) 1.6/2.0L	2363	69210	5019214AA	CH-0043	CH-0044	CH-7
NEON(02-05) 1.6/2.0L	2362 +	69209	5014580AA +	CH-0043	CH-0045	CH-7
NITRO(07-11) 3.7/4.0L	2971		68003973AB	CH-0069	CH-0070	CH-11
RAM (83-93) 2.0/2.4/2.6L	700		MB007580 +	CH-0046	CH-0047	CH-7
RAM (00-03) 3.9/5.2/5.9L	1707		52029630 +	CH-0055	CH-0056	CH-9
RAM (04-09) 5.9/6.7L	2711 +		55056392AA	CH-0057	CH-0058	CH-9
RAM (04-09) 5.9/6.7L				CH-0116	CH-0117	CH-18
RAM 1500(94-01) 3.9/5.2L	1552		52006491/AC +	CH-0093	CH-0094	CH-14
RAM（94-02）2500/3500 5.9L	1553			CH-0154	CH-0155	CH-23
RAM（94-02）2500/3500 8.0L	1554			CH-0154	CH-0156	CH-23
RAM（10-12）3500 6.7L	13296		55057089AB	CH-0134	CH-0135	CH-20
RAM PROMASTER(14-15)1500/2500/3500	13448		68188992AA	CH-0140	CH-0141	CH-21
RAM 1500(02-03)3.7/4.7/5.7L	2479	60917	52028829AE	CH-0018	CH-0019	CH-3
RAM 1500(02-03)3.7/4.7/5.7L				CH-0021	CH-0019	CH-4
RAM 1500(02-03)3.7/4.7/5.7L				CH-0022	CH-0023	CH-4
RAM 1500(02-08)4.7/5.9L	2480	60918	52028830AG	CH-0016	CH-0017	CH-3
RAM 1500(02-08)4.7/5.9L				CH-0020	CH-0017	CH-3
RAM 1500(11-14) 3.6/4.7/5.7L	13129 +		55056858AB +	CH-0120	CH-0121	CH-18
SHADOW（87-89）2.2L	980			CH-0163	CH-0164	CH-24
SHADOW（87-90）	68			CH-0163-1	CH-0164	CH-24
SHADOW（89-90）2.2/2.5L	980			CH-0163	CH-0164	CH-24
SPRINTER 2500(07-09)	13254	67156A +	68013630AA	ME-0099	ME-0100	ME-14
SPRINTER 3500(07-09)	13254	67156A +	68013630AA	ME-0099	ME-0100	ME-14
STEALTH(91-96) 3.0L	1298 +		MB605454 +	MI-0003	MI-0002	MI-1
STRATUS(95-00) 2.0/2.4L	1702	60981A	4596399AA +	CH-0097	CH-0098	CH-15
STRATUS(95-00) 2.0/2.4L				CH-0099	CH-0100	CH-15
STRATUS(95-00) 2.0/2.4L				CH-0101	CH-0100	CH-15
STRATUS(01-05) 2.4L	2438 +		MR373103 +	MI-0087	MI-0089	MI-17
STRATUS(01-05) 2.4L	2438 +		MR373103 +	MI-0087	MI-0089-1	MI-17
STRATUS(01-05) 2.7/3.0L	2410 +		MR373104 +	MI-0087	MI-0088	MI-17
STRATUS(01-05) 2.7/3.0L	2410 +		MR373104 +	MI-0087	MI-0088-1	MI-17
VERNA(04-05) 1.6L	2338	67023	2531025050 +	HY-0059	HY-0060	HY-10
VERNA(04-05) 1.6L				HY-0059	HY-0060-1	HY-10

Model	DPI	NISSENS	OEM	Hongyan		Page
FORD						
AEROSTAR(86-97) 3.0L	901 +			FO-0201	FO-0202	FO-32
ASPIRE(94-97) 1.3L	1626		F4BZ005A/B	FO-0045	FO-0046	FO-8
BRONCO(85-96) 5.0/5.8L	1451		52470841 +	FO-0051	FO-0052	FO-8
B-MAX(12-) 1.0L		66858	1768105	FO-0132	FO-0133	FO-21
B-MAX(12-) 1.6L	13201	66859	1772874	FO-0132	FO-0134	FO-22
C-MAX(10-) 1.0L		66860	1766348 +	FO-0127	FO-0128-1	FO-21
C-MAX(10-15) 2.0L		65615A	1377541 +	FO-0137	FO-0138	FO-22
C-MAX(10-15) 2.0L		66857	1377542 +	FO-0137-1	FO-0138-1	FO-23
C-MAX(13-15) 2.0L	13331			FO-0239	FO-0240	FO-38
CAPRI(78-79) 2.3/3.3/5.0L	546			FO-0231	FO-0232	FO-37
CONTOUR(95-00) 2.0/2.5L	1718 +	62050	FR5Z8005AA/AB	FO-0077	FO-0081	FO-13
COUGAR(98-) 2.0/2.5L		62056A		FO-0014	FO-0015	FO-3
COUGAR(91-93) 3.8/5.0L				FO-0335-1	FO-0202	FO-52
COUNTRY SQUIRE(87-91) 5.0L	227		FOVY8005A/B +	FO-0035	FO-0036	FO-6
COUNTRY SQUIRE(87-91)5.0L				FO-0035	FO-0037	FO-53
COUNTRY SQUIRE(87-91)5.0L	227		FOVY8005A/B +	FO-0035	FO-0336	FO-53
CROWN VICTORIA(87-91 5.0L	227		FOVY8005A/B +	FO-0035	FO-0036	FO-6
CROWN VICTORIA(92-94) 4.6L	1279	62031A	F3AH8005AB +	FO-0029	FO-0030	FO-5
CROWN VICTORIA(95-97) 4.6L	1737		F5VH8005AB +	FO-0027	FO-0028	FO-5
CROWN VICTORIA(98-04) 4.6L	2157	62033	F8VZ8005BA +	FO-0025	FO-0026	FO-5
CROWN VICTORIA(06-11) 4.6L	2852		6W1Z8005AA +	FO-0109	FO-0110	FO-18
CROWN RICTORIA(03-05) 4.6L	2610		3W1H8005AF/G	FO-0039	FO-0040	FO-7
CROWN RICTORIA(03-05) 4.6L				FO-0039-1	FO-0040-1	FO-7
E-100(75-82)5.0/5.8/6.6L	1333			FO-0311	FO-0313	FO-48
E-150(92-96)4.9/6.0L	1455			FO-0311	FO-0312	FO-48
E-150(92-96) 4.9L	1455			FO-0219	FO-0220	FO-35
E-150(92-96) 5.8L	1456			FO-0221	FO-0222	FO-35
E-150(97-14) 4.6L	1994		6C2Z8005AA	FO-0119	FO-0120	FO-19
E-250(92-96)4.9L	1455			FO-0311	FO-0312	FO-48
E-250(92-96) 4.6L	1455			FO-0219	FO-0220	FO-35
E-250(92-96) 5.8L	1456			FO-0221	FO-0222	FO-35
E-250(97-14) 4.6L	1994		6C2Z8005AA	FO-0119	FO-0120	FO-19
E-350(92-96)4.9L	1455			FO-0311	FO-0312	FO-48
E-350(92-96) 4.6L	1455			FO-0219	FO-0220	FO-35
E-350(92-96) 5.8L	1456			FO-0221	FO-0222	FO-35
E-350(95-96)7.3L	1724			FO-0119	FO-0334	FO-52
E-350 SUPER DUTY(04-10) 6.0L	2976			FO-0185	FO-0186	FO-30
E-450 SUPER DUTY(04-10) 6.0L	2976			FO-0185	FO-0186	FO-30
EXCURSION(98-05) 6.8L	2171		6C2Z8005BA +	FO-0117	FO-0118	FO-19
EXCURSION(03-05) 6.0L	2741		3C3Z8005CA +	FO-0117-1	FO-0118-1	FO-19
EDGE(07-12) 3.5/3.7L	2937		7T4Z8005A/B	FO-0115	FO-0116	FO-18
EDGE(12-14) 2.0L	13356			FO-0253	FO-0254	FO-40
EDGE(15-)				FO-0278	FO-0279	FO-44
ESCAPE(01-08) 2.0L	2306		4L8Z8005JA +	MA-0073	MA-0074	MA-11
ESCAPE(01-08) 3.0L	2307		4L8Z8005KA +	MA-0071	MA-0072	MA-11
ESCAPE(05-08) 2.3L	2762		5M6Z8005AC	FO-0107	FO-0108	FO-17
ESCAPE(05-08) 2.3L	2762		5M6Z8005AC	FO-0344	FO-0108	FO-54
ESCAPE(05-12) 2.5L	2763		5M6Z8005BE +	FO-0105	FO-0106	FO-17
ESCAPE(08-12) 3.0L	13041			FO-0205	FO-0206	FO-33
ESCAPE(09-12) 2.5L	13209		8L8Z18476A	FO-0107	FO-0252	FO-40

Model	DPI	NISSENS	OEM	Hongyan		Page
ESCAPE(13-14) 2.0/2.5L	13313		CV6Z8005B	FO-0235	FO-0236	FO-37
ESCAPE HYBRID(09-)				FO-0302	FO-0303	FO-47
ESCAPE(01-04)2.0L	2306	62004	YF0915200 A4119589	FO-0307	FO-0308	FO-48
ESCAPE(01-08）3.0L	2307	62003	4522301+	FO-0290	FO-0291	FO-45
ESCAPE(08-)3.0L			8L8Z-8005-B	FO-0300	FO-0301	FO-47
ESCORT(81-90)				FO-0284	FO-0285	FO-45
ESCORT(86-90) 1.4/1.6L		62154	1643536/41 +	FO-0062	FO-0063	FO-11
ESCORT(90-) 1.4/1.6L		62162		FO-0211	FO-0212	FO-33
ESCORT(90-93) 1.4/1.6L		62216A +	6912236 +	FO-0064	FO-0066	FO-11
ESCORT(90-95) 1.8L		62164A	1029459 +	FO-0064	FO-0065	FO-11
ESCORT(91-02) 2.0L	1273			FO-0170	FO-0171	FO-28
ESCORT(98-03) 2.0L	2140			FO-0170	FO-0172	FO-28
EXPEDITION(97-04) 4.6L	2257 +		XL3Z8005AA/DA	FO-0098	FO-0099	FO-16
EXPEDITION(97-04) 4.6L				FO-0098-1	FO-0099	FO-16
EXPEDITION(97-04) 4.6L				FO-0098-2	FO-0099	FO-16
EXPEDITION(97-04) 4.6L				FO-0098	FO-0100	FO-16
EXPEDITION(03-04) 4.6/5.4L	2609			FO-0192	FO-0193	FO-31
EXPEDITION(07-08) 5.4L	13045		9L3Z8005A +	FO-0129	FO-0130	FO-21
EXPEDITION(09-14) 5.4L	13099		9L3Z8005A	FO-0131	FO-0130-1	FO-21
EXPEDITION(07-)5.4L			7L1Z-8005-A	FO-0298	FO-0299	FO-46
EXPEDITION(15-17)3.5L	13227 +			FO-0306	FO-0130-1	FO-47
EXPLORER(85-94) 3.0/4.0L	1061 +			FO-0190	FO-0191	FO-31
EXPLORER(91-04) 4.0L	1164			FO-0163	FO-0164	FO-27
EXPLORER(95-97) 4.0L	1728			FO-0198	FO-0199	FO-32
EXPLORER(96-99) 4.0L	2174 +	69203	1L5Z8005MA	FO-0003	FO-0004	FO-1
EXPLORER(96-99) 5.0L	1824 +	69204	F67H8005AA +	FO-0001	FO-0002	FO-1
EXPLORER(98-01)4.0L	2173			FO-0003	FO-0343	FO-54
EXPLORER(02-05) 4.0/4.6L	2342		3L2Z8005ZZ +	FO-0016	FO-0017	FO-3
EXPLORER(06-07) 4.0/4.6L	2816 +		6L2Z8005AA +	FO-0096	FO-0097	FO-15
EXPLORER(11-13) 2.0/3.5L	13308		DB5Z8005DA +	FO-0139	FO-0140	FO-23
EXPLORER(11-15) 3.5L	13185			FO-0250	FO-0251	FO-39
EXPLORER(12-15)2.0L	13327			FO-0341	FO-0342	FO-54
EXPLORER(13-15)				FO-0339	FO-0340	FO-53
EXPLORER				FO-0316	FO-0317	FO-49
EXPLORER				FO-0318	FO-0317	FO-49
EXPLORER				FO-0319	FO-0320	FO-49
EXPLORER(11-13)2.0/3.5L				FO-0324	FO-0140	FO-50
EXPLORER(11-15)3.5L	13185			FO-0321	FO-0322	FO-50
EXPLORER(11-15)3.5L				FO-0250	FO-0323	FO-50
EXPLORER(13-15)3.5L	13364			FO-0276	FO-0277	FO-44
F-500(75-77) 5.4/5.9/6.4L	456			FO-0229	FO-0230	FO-36
F-150(85-96) 5.0/5.8/7.0L	1451		52470841 +	FO-0051	FO-0052	FO-8
F-150(85-97)4.9L	1454			FO-0181	FO-0182	FO-29
F-150(85-97)4.9L	1452			FO-0183	FO-0182	FO-29
F-150(85-97)4.9L	1453			FO-0051	FO-0184	FO-30
F-150(97-04) 4.6/5.4L	2257 +		XL3Z8005AA/DA	FO-0098	FO-0099	FO-16
F-150(97-04) 4.6/5.4L				FO-0098-1	FO-0099	FO-16
F-150(97-04) 4.6/5.4L				FO-0098-2	FO-0099	FO-16
F-150(97-04) 4.6/5.4L				FO-0098	FO-0100	FO-16
F-150(03-04) 5.4L	2719			FO-0098-1	FO-0187	FO-30
F-150(11-14) 3.5/3.7/5.0/6.2L	13227 +			FO-0306	FO-0130-1	FO-47

Model	DPI	NISSENS	OEM	Hongyan		Page
F-150(15-16)2.7/3.5/5.0L	13510			FO-0272	FO-0273	FO-43
F-250(85-96) 5.0/5.8/7.0L	1451		52470841 +	FO-0051	FO-0052	FO-8
F-250(85-97) 4.9L	1454			FO-0181	FO-0182	FO-29
F-250(85-97) 4.9L	1452			FO-0183	FO-0182	FO-29
F-250(85-97) 4.9L	1453			FO-0051	FO-0184	FO-30
F-250(97-04) 4.6/5.4L	2257 +		XL3Z8005AA/DA	FO-0098	FO-0099	FO-16
F-250(97-04) 4.6/5.4L				FO-0098-1	FO-0099	FO-16
F-250(97-04) 4.6/5.4L				FO-0098-2	FO-0099	FO-16
F-250(97-04) 4.6/5.4L				FO-0098	FO-0100	FO-16
F-250(98-05) 6.0/6.8L	2171		6C2Z8005BA +	FO-0117	FO-0118	FO-19
F-250(03-05) 6.0L	2741		3C3Z8005CA +	FO-0117-1	FO-0118-1	FO-19
F-350(85-97) 4.9L	1454			FO-0181	FO-0182	FO-29
F-350(85-97) 4.9L	1452			FO-0183	FO-0182	FO-29
F-350(85-97) 4.9L	1453			FO-0051	FO-0184	FO-30
F-350(98-05) 6.0/6.8L	2171		6C2Z8005BA +	FO-0117	FO-0118	FO-19
F-350(03-05) 6.0L	2741		3C3Z8005CA +	FO-0117-1	FO-0118-1	FO-19
F-250 SUPER DUTY(08-10) 6.4L	13022		8C3Z8009B	FO-0143	FO-0144	FO-24
F-250 SUPER DUTY(08-10) 5.4/6.8L	13231		88975760 +	FO-0225	FO-0226	FO-35
F-250 SUPER DUTY(08-15) 5.4/6.8L	13145			FO-0225	FO-0257	FO-40
F-250 SUPER DUTY(08-15)	13231		22035000303	FO-0225	FO-0325	FO-50
F-250 SUPER DUTY(11-15) 6.7L	13230		BC3Z8005E	FO-0243	FO-0244	FO-38
F-350 SUPER DUTY(08-10) 6.4L	13022		8C3Z8009B	FO-0143	FO-0144	FO-24
F-350 SUPER DUTY(08-10) 5.4/6.8L	13231		88975760 +	FO-0225	FO-0226	FO-35
F-350 SUPER DUTY(08-15) 5.4/6.8L	13145			FO-0225	FO-0257	FO-40
F-350 SUPER DUTY(11-15) 6.7L	13230		BC3Z8005E	FO-0243	FO-0244	FO-38
F-450 SUPER DUTY(08-10) 6.4L	13022		8C3Z8009B	FO-0143	FO-0144	FO-24
F-450 SUPER DUTY(08-10) 5.4/6.8L	13231		88975760 +	FO-0225	FO-0226	FO-35
F-350 SUPER DUTY(08-15)	13231		22035000303	FO-0225	FO-0325	FO-50
F-450 SUPER DUTY(11-15) 6.7L	13230		BC3Z8005E	FO-0243	FO-0244	FO-38
FAIRMONT(78-79) 2.3/3.3/5.0L	546			FO-0231	FO-0232	FO-37
FALCON(88-)				FO-0227	FO-0228	FO-36
FALCON(88-)				FO-0227	FO-0228-1	FO-36
FALCON(88-)				FO-0227	FO-0228-2	FO-36
FALCON(01-10)				FO-0258	FO-0259	FO-41
FALCON(01-10)				FO-0260	FO-0261	FO-41
FALCON(01-10)				FO-0260	FO-0261-1	FO-41
FALCON(01-10)				FO-0258	FO-0262	FO-41
FIESTA(89-) 1.0/1.1/1.3/1.4/1.6L		62076A		FO-0209	FO-0210	FO-33
FIESTA(89-) 1.8L		62084		FO-0207	FO-0208	FO-33
FIESTA(95-) 1.1/1.3L		62085A	96FB8005AC +	FO-0084	FO-0085	FO-14
FIESTA(95-) 1.8L		62055	96FB8005GD +	FO-0086	FO-0087	FO-14
FIESTA(01-) 1.3/1.4L		62027A	1214784 +	FO-0088	FO-0089	FO-14
FIESTA(01-) 1.4/1.6L		62028A +		FO-0213	FO-0214	FO-34
FIESTA (04-08) 1.6L		69223	1334250 +	FO-0145	FO-0146	FO-24
FIEATA(05-08)		69224	1334043 +	FO-0147	FO-0148	FO-24
FIESTA(09-)				FO-0090	FO-0091	FO-14
FIESTA(12-) 1.0L		66858	1768105	FO-0132	FO-0133	FO-21
FIESTA(12-) 1.6L	13201	66859	1772874	FO-0132	FO-0134	FO-22
FIESTA(12-)				FO-0263	FO-0264	FO-42
FIESTA(12-)				FO-0132	FO-0265	FO-42
FIESTA(12-)				FO-0132	FO-0266	FO-42

Model	DPI	NISSENS	OEM	Hongyan		Page
FIESTA(15-)1.6LT	13430		C1BZ8005A FO3010327	FO-0280	FO-0281	FO-44
FIESTA(1992)1.4/1.6/1.8/16V				FO-0288	FO-0289	FO-45
FLEX(10-12)3.5L	13185			FO-0250	FO-0323	FO-50
FLEX(10-16)3.5L	13185			FO-0321	FO-0322	FO-50
FIESTA				FO-0007	FO-0008	FO-2
FIESTA				FO-0009	FO-0008	FO-2
FIESTA				FO-0009-1	FO-0008-1	FO-2
FIESTA				FO-0010	FO-0011	FO-2
FIGO(10-) 1.4L				FO-0092	FO-0093	FO-15
FIGO				FO-0094	FO-0095	FO-15
FIGO				FO-0094-1	FO-0095	FO-15
FIVE HUNDRED(05-07) 3.0L	2761		5F9H8005AC +	FO-0067	FO-0068	FO-11
FLEX(07-12) 3.5L	2937		7T4Z8005A/B	FO-0115	FO-0116	FO-18
FLEX(10-12) 3.5L	13185			FO-0250	FO-0251	FO-39
FOCUS(00-07) 1.4/1.6/1.8L	2297	62075A	YS4Z8005AA	FO-0055	FO-0056	FO-9
FOCUS(00-07) 1.4/1.6/1.8L				FO-0055	FO-0056-1	FO-9
FOCUS(00-07) 2.0L	2296		YS4Z8005BB	FO-0053	FO-0054	FO-9
FOCUS(00-07) 2.0L				FO-0053	FO-0054-1	FO-9
FOCUS(04-15) 1.6L		69256	1305492 +	MA-0069	MA-0070	MA-11
FOCUS(05-07)			5S4Z-8005AA	FO-0294	FO-0295	FO-46
FOCUS(08-11)2.0L	13087		8S4Z8005A	FO-0268	FO-0269	FO-43
FOCUS(11-) 1.0L		66860	1766348 +	FO-0127	FO-0128-1	FO-21
FOCUS(11-) 1.6L		69238	1720432 +	FO-0127	FO-0128	FO-20
FOCUS(12-15) 2.0L	13219		CV6Z8005A	FO-0121	FO-0122	FO-19
FOCUS(16-)1.0L(Turbocharged)				FO-0282	FO-0283	FO-44
FOCUS 1.5L			EJ738005AG	FO-0270	FO-0271	FO-43
FREESTAR(04-07) 3.9/4.2L	2258			FO-0160	FO-0161	FO-26
FREESTYIE(05-07) 3.0L	2761		5F9H8005AC +	FO-0067	FO-0068	FO-11
FUSION(02-) 1.3/1.4/1.6L		62027A	1214784 +	FO-0088	FO-0089	FO-14
FUSION(03-) 1.4/1.6L		62028A +		FO-0213	FO-0214	FO-34
FUSION(06-09) 1.6L		69223	1334250 +	FO-0145	FO-0146	FO-24
FUSION(06-09) 2.3/3.0L	2856		6E5Z8005B	FO-0113	FO-0114	FO-18
FUSION(06-09) 2.3/3.0L				FO-0255	FO-0256	FO-40
FUSION(13-15) 1.6/2.0/2.5L	13321			FO-0237	FO-0238	FO-38
GALAXY(06-15) 2.0L		65615A	1377541 +	FO-0137	FO-0138	FO-22
GALAXY(06-15) 2.0L		66857	1377542 +	FO-0137-1	FO-0138-1	FO-23
GRAND MARQUIS(86-91) 5.0L	227		FOVY8005A/B +	FO-0035	FO-0036	FO-6
GRAND MARQUIS(86-91)5.0L	227		FOVY8005A/B +	FO-0035	FO-0336	FO-53
GRAND MARQUIS(92-94) 4.6L	1279	62031A	F3AH8005AB +	FO-0029	FO-0030	FO-5
GRAND MARQUIS(95-97) 4.6L	1737		F5VH8005AB +	FO-0027	FO-0028	FO-5
GRAND MARQUIS(98-04) 4.6L	2157	62033	F8VZ8005BA +	FO-0025	FO-0026	FO-5
GRAND MARQUS(03-05) 4.6L	2610		3W1H8005AF/G	FO-0039	FO-0040	FO-7
GRAND MARQUS(03-05) 4.6L				FO-0039-1	FO-0040-1	FO-7
GRAND MARQUIS(06-11) 4.6L	2852		6W1Z8005AA +	FO-0109	FO-0110	FO-18
IKON(05-08)		69224	1334043 +	FO-0147	FO-0148	FO-24
KA(02-08) 1.3/1.6L		62005	1231795 +	FO-0101	FO-0102	FO-17
KA(00-)				FO-0215	FO-0216	FO-34
KA(00-)				FO-0217	FO-0218	FO-34
KA(00-)				FO-0217-1	FO-0218-1	FO-34
KA(00-)				FO-0223	FO-0224	FO-35
KA				FO-0103	FO-0104	FO-17

Model	DPI	NISSENS	OEM	Hongyan		Page
LOBO(03-04) 5.4L	2719			FO-0098-2	FO-0187	FO-30
LOBO(11-14)6.2L	13227 +			FO-0306	FO-0130-1	FO-47
MONDEO(92-) 1.6/1.8/2.0L		62105	6899904 +	FO-0082	FO-0083	FO-13
MONDEO(92-) 1.8/2.5L		62056A		FO-0014	FO-0015	FO-3
MONDEO(00-) 1.8/2.0L		620411	1142808 +	FO-0012	FO-0013	FO-3
MONDEO(00-) 2.0L		62023A	1216264 +	FO-0024	FO-0023	FO-4
MONDEO(00-) 2.0L				FO-0022	FO-0023	FO-4
MONDEO(00-02) 2.0L		62025A	1114766 +	FO-0073	FO-0074	FO-12
MONDEO(00-03) 2.0L				FO-0079	FO-0080	FO-13
MONDEO(00-03) 2.5/3.0L				FO-0069	FO-0070	FO-12
MONDEO(00-03) 2.5/3.0L				FO-0071	FO-0072	FO-12
MONDEO(00-03) 2.5/3.0L				FO-0075	FO-0076	FO-12
MONDEO(00-03) 2.5/3.0L				FO-0077	FO-0078	FO-13
MONDEO(07-15) 2.0/2.3L		65615A	1377541 +	FO-0137	FO-0138	FO-22
MONDEO(07-15) 2.0/2.3L		66857	1377542 +	FO-0137-1	FO-0138-1	FO-23
MONDEO				FO-0141	FO-0142	FO-23
MUSTANG(78-79) 2.3/3.3/5.0L	546			FO-0231	FO-0232	FO-37
MUSTANG(94-96) 3.8/5.0L	1488			FO-0156	FO-0155	FO-25
MUSTANG(96-) 4.6L	1775			FO-0154	FO-0155	FO-25
MUSTANG(97-04) 3.8L	2138			FO-0162	FO-0042	FO-26
MUSTANG(97-04) 4.6L	2139		1R3H8005AA	FO-0041	FO-0042	FO-7
MUSTANG(04-14) 3.7/5.0L	2789		4R3Z8005CA	FO-0111	FO-0112	FO-18
ORION(86-90) 1.4/1.6L		62154	1643536/41 +	FO-0062	FO-0063	FO-11
ORION(90-) 1.4/1.6L		62162		FO-0211	FO-0212	FO-33
RANGER(85-94) 2.3L	1062			FO-0188	FO-0189	FO-30
RANGER(85-94) 3.0/4.0L	897			FO-0175	FO-0176	FO-28
RANGER(85-94) 3.0/4.0L	1061 +			FO-0190	FO-0191	FO-31
RANGER(91-04) 4.0L	1164			FO-0163	FO-0164	FO-27
RANGER(95-97) 2.3L	1726			FO-0173	FO-0174	FO-28
RANGER(95-97) 3.0/4.0L	1722			FO-0198	FO-0200	FO-32
RANGER(98-01) 2.5L	2172		F87Z8005GA	FO-0005	FO-0006	FO-1
RANGER(98-09)3.0/4.0L	2173			FO-0003	FO-0343	FO-54
RANGER(01-12) 2.3L	2470	69229	4219903 +	FO-0003-1	FO-0004	FO-1
RANGER(10-)2.3L				FO-0304	FO-0305	FO-47
RANGER(11-14) 2.2L		69245	1726085 +	FO-0135	FO-0136-1	FO-22
RANGER(11-14) 2.2L				FO-0135	FO-0136	FO-22
PROBE(89-92) 2.2L	248		AL02152009 +	MA-0093	MA-0094	MA-14
TAURUS(86-88) 3.0L	891			FO-0169	FO-0168-1	FO-27
TAURUS(86-91) 2.5/3.0L	890		E70H8005AA +	FO-0167	FO-0168	FO-27
TAURUS(88-95) 3.0/3.8L	1094 +	62065	E6DA8005EC +	FO-0031	FO-0032	FO-5
TAURUS(88-95) 3.0/3.8L				FO-0047	FO-0048	FO-8
TAURUS(96-07) 3.0L	1830		F6DZ8005A	FO-0043	FO-0044	FO-7
TAURUS(07-12) 3.5L	2937		7T4Z8005A/B	FO-0115	FO-0116	FO-18
TAURUS(13-15) 3.5L	13306		DG1Z8005D	FO-0139-1	FO-0140-1	FO-23
TAURUS(15-) 2.0 L				FO-0330	FO-0331	FO-51
TAURUS(15-) 2.0 L				FO-0332	FO-0333	FO-52
TAURUS(86-97)				FO-0286	FO-0287	FO-45
THUNDERBIRD(89-93)3.8/5.0L	1095+			FO-0335	FO-0202	FO-52
THUNDERBIRD(94-97) 3.8L	1550			FO-0157	FO-0158	FO-26
THUNDERBIRD(94-97) 4.6L	1551			FO-0159	FO-0158	FO-26
THUNDERBIRD(02-05) 3.9L	2256		XR8002935	FO-0037	FO-0038	FO-6

Model	DPI	NISSENS	OEM	Hongyan		Page
TEMPO(92-94) 2.3/3.0L	1322			FO-0165	FO-0166	FO-27
TRANSIT(92-) 2.0/2.5L		62177	104007 +	FO-0059	FO-0060	F0-10
TRANSIT(92-) 2.0/2.5L				FO-0061	FO-0060	F0-10
TRANSIT(94-) 2.5L		62057A	112703 +	FO-0057	FO-0058	FO-10
TRANSIT(94-) 2.5L				FO-0057	FO-0058-1	FO-10
TRANSIT(00-) 2.0L		62046A	4084418 +	FO-0020	FO-0021	FO-4
TRANSIT(00-) 2.3/2.4L		62043A	1103120 +	FO-0018	FO-0019	FO-4
TRANSIT(06-) 2.2/2.3/2.4L		69225	1370865 +	FO-0123	FO-0124	FO-20
TRANSIT(06-) 2.2/2.3/2.4L			1373156 +	FO-0123-1	FO-0124	FO-20
TRANSIT(10-13) 2.0L	13184		9T1Z8005A	FO-0233	FO-0234	FO-37
TRANSIT(10-13) 2.0L				FO-0233	FO-0234-1	FO-37
TRANSIT(13-) 2.2L		66861	1789645 +	FO-0125	FO-0126	FO-20
TRANSIT(14-15) 1.6/2.5L	13313		CV6Z8005B	FO-0235	FO-0236	FO-37
TRANSIT CONNECT(10-13)2.0L				FO-0233	FO-0327	FO-51
TRANSIT CONNECT(10-13)2.0L	13362			FO-0338	FO-0256	FO-53
TRANSIT-150 3.2/3.5/3.7L	13454			FO-0274	FO-0275	FO-43
TRANSIT-250 3.2/3.5/3.7L	13454			FO-0274	FO-0275	FO-43
TRANSIT-350 3.2/3.5/3.7L	13454			FO-0274	FO-0275	FO-43
TRIBUTE(01-04)2.0L	2306	62004	YF0915200 A4119589	FO-0307	FO-0308	FO-48
TRIBUTE(01-06)3.0L	2307	62003	4522301+	FO-0290	FO-0291	FO-45
TRANSIT				FO-0245	FO-0246	FO-39
WINDSTAR(95-98) 3.0/3.8L	1609	62068A	F58Z8005A +	FO-0033	FO-0034	FO-6
WINDSTAR(95-98) 3.0/3.8L				FO-0033	FO-0034-1	FO-6
WINDSTAR(95-98)3.0/3.8L				FO-0033	FO-0326	FO-51
WINDSTAR(99-03) 3.8L	2258			FO-0160	FO-0161	FO-26
ZEPHYR(78-79) 2.3/3.3/5.0L	546			FO-0231	FO-0232	FO-37
FORD				FO-0049	FO-0050	FO-8
FORD				FO-0177	FO-0178	FO-29
FORD				FO-0179	FO-0180	FO-29
FORD				FO-0194	FO-0195	FO-31
08-12 FORD ESCAPE 2.3/2.5L	13040 +			FO-0203	FO-0204	FO-32
FORD				FO-0241		FO-38
FORD				FO-0247	FO-0248	FO-39
FORD				FO-0247	FO-0249	FO-39
FORD				FO-0345	FO-0346	FO-54

FIAT						
ALBEA(02-) 1.2/1.4L		61683	46833511 +	FI-0022	FI-0023	FI-4
ALBEA(02-) 1.2/1.4L				FI-0024	FI-0023	FI-4
ALBEA(02-) 1.2/1.4L		61684	46826678 +	FI-0025	FI-0026	FI-4
BRAVA(95-) 1.2/1.4/1.6L		61786 +	46420484 +	FI-0008	FI-0009	FI-2
BRAVA(95-) 1.2/1.4/1.6L				FI-0011	FI-0012	FI-2
BRAVA(95-) 1.6L		617843	46809638	FI-0010	FI-0009	FI-2
BRAVA(95-) 1.9L		61792A	46405919 +	FI-0062	FI-0063	FI-9
BRAVA(95-) 1.9L		61792A	46405919 +	FI-0064	FI-0063	FI-10
BRAVA(95-) 1.4/1.8/1.9L		61672A	46404163 +	FI-0065	FI-0066	FI-10
BRAVA(95-) 1.4/1.8/1.9L				FI-0067	FI-0066	FI-10
BRAVA(95-) 1.4/1.8/1.9L				FI-0068	FI-0066	FI-10
BRAVA(95-) 1.4/1.8/1.9L				FI-0069	FI-0066	FI-11
BRAVO(95-) 1.2/1.4/1.6L		61786 +	46420484 +	FI-0008	FI-0009	FI-2
BRAVO(95-) 1.2/1.4/1.6L				FI-0011	FI-0012	FI-2

Model	DPI	NISSENS	OEM	Hongyan		Page
BRAVO(95-) 1.6L		617843	46809638	FI-0010	FI-0009	FI-2
BRAVO(95-) 1.4/1.8/1.9/2.0L		61672A	46404163 +	FI-0065	FI-0066	FI-10
BRAVO(95-) 1.4/1.8/1.9/2.0L				FI-0067	FI-0066	FI-10
BRAVO(95-) 1.4/1.8/1.9/2.0L				FI-0068	FI-0066	FI-10
BRAVO(95-) 1.4/1.8/1.9/2.0L				FI-0069	FI-0066	FI-11
CINQUECENTO(91-) 1.1L		61814	46405843 +	FI-0001	FI-0002	FI-1
CINQUECENTO(91-) 1.1L			46405843 +	FI-0027	FI-0028	FI-5
COUPE(93-) 1.8/2.0L		61869 +	46404422 +	FI-0013	FI-0014	FI-2
COUPE(93-) 1.8/2.0L				FI-0015	FI-0014	FI-3
COUPE(93-) 1.8/2.0L				FI-0016	FI-0017	FI-3
DOBLO(01-) 1.4/1.6/1.9L		61766	46749018 +	FI-0056	FI-0057	FI-9
DUCATO(94-) 1.9L		61862	1330V9 +	FI-0031	FI-0032	FI-5
DUCATO(94-) 1.9/2.0/2.5/2.8L		61390A +	1330L2 +	FI-0031	FI-0033	FI-5
DUCATO(06-) 2.2/2.3/3.0L		63555A	1342588080 +	FI-0058	FI-0059	FI-9
DUCATO(06-) 2.3/3.0L		63556	1340359080 +	FI-0060	FI-0061	FI-9
EGEA(15-)1.3L			52052220	FI-0101	FI-0102	FI-16
EGEA(15-)1.3L			52052630	FI-0103	FI-0104	FI-16
IDEA(04-) 1.3L		61896 +	46834067 +	FI-0037	FI-0038	FI-6
LINEA(07-) 1.3/1.4/1.6L		61694	51785217 +	FI-0084	FI-0085	FI-13
MAREA(95-) 1.2/1.4/1.6L		61786 +	46420484 +	FI-0008	FI-0009	FI-2
MAREA(95-) 1.2/1.4/1.6L				FI-0011	FI-0012	FI-2
MAREA(96-) 1.9L		61792A	46405919 +	FI-0062	FI-0063	FI-9
MAREA(96-) 1.9L		61792A	46405919 +	FI-0064	FI-0063	FI-10
MULTIPLA(98-) 1.9L		61672A	46404163 +	FI-0065	FI-0066	FI-10
MULTIPLA(98-) 1.9L				FI-0067	FI-0066	FI-10
MULTIPLA(98-) 1.9L				FI-0068	FI-0066	FI-10
MULTIPLA(98-) 1.9L				FI-0069	FI-0066	FI-11
MULTIPLA(99-) 1.6L		61786 +	46420484 +	FI-0008	FI-0009	FI-2
PALIO(96-) 1.2/1.4L		61801	46449104 +	FI-0021	FI-0019	FI-4
PALIO(96-) 1.2/1.6L		61683	46833511 +	FI-0022	FI-0023	FI-4
PALIO(96-) 1.2/1.6L				FI-0024	FI-0023	FI-4
PALIO(96-) 1.2/1.6L		61684	46826678 +	FI-0025	FI-0026	FI-4
PALIO(96-) 1.2/1.4/1.6L		61802	46417059 +	FI-0018	FI-0019	FI-3
PALIO(96-) 1.2/1.4/1.6L				FI-0018	FI-0020	FI-3
PALIO(98-00)1.7D	61804		46440541 +	FI-0105	FI-0106	FI-16
PALIO(05-) 1.0/1.2/1.4L		61782	46779393 +	FI-0041	FI-0042	FI-7
PALIO(05-) 1.0/1.2/1.4L				FI-0043	FI-0044	FI-7
PALIO(05-) 1.0/1.2/1.4L				FI-0045	FI-0044	FI-7
PALIO(05-) 1.0/1.2/1.4L				FI-0046	FI-0047	FI-7
PALIO (09-)				FI-0086	FI-0087	FI-13
PANDA(00-) 1.1L		617731	46777410 +	FI-0003	FI-0004	FI-1
PANDA(03-) 1.2L		617846	51773192 +	FI-0076	FI-0077	FI-12
PANDA(03-) 1.2L				FI-0078	FI-0077	FI-12
PANDA(03-) 1.2L				FI-0079	FI-0080	FI-12
PANDA(03-) 1.2L				FI-0081	FI-0080	FI-13
PUNTO (93-)1.2L		61797 +	7794871 +	FI-0090	FI-0091	FI-14
PUNTO I (93-)1.4L		61859	7721579 +	FI-0073	FI-0074	FI-11
PUNTO I (93-)1.4L		61859	7721579 +	FI-0075	FI-0074	FI-12
PUNTO I (93-) 1.7L		618121	6466627 +	FI-0070	FI-0071	FI-11
PUNTO I (93-) 1.7L		618121	6466627 +	FI-0072	FI-0071	FI-11
PUNTO (93-)1.6L		61798	7783504	FI-0088	FI-0089	FI-14

Model	DPI	NISSENS	OEM	Hongyan		Page
PUNTO II(99-) 1.9L		61887	46739749	FI-0034	FI-0036	FI-6
PUNTO II(03-) 1.3L		61896 +	46834067 +	FI-0037	FI-0038	FI-6
PUNTO II(03-) 1.8/1.9L		61899	46546944 +	FI-0034	FI-0035	FI-6
RITMO (83-)1.5L		61922	7572592	FI-0082	FI-0083	FI-13
SEICENTO(98-) 0.9/1.1L		61814	46405843 +	FI-0001	FI-0002	FI-1
SEICENTO(98-) 0.9/1.1L			46405843 +	FI-0027	FI-0028	FI-5
SEICENTO(98-) 1.1L		61785	46558704	FI-0005	FI-0006	FI-1
SEICENTO(98-) 1.1L				FI-0007	FI-0006	FI-1
SEICENTO(98-) 1.1L		61785	46558704	FI-0052	FI-0053	FI-8
SIENA(96-) 1.2L		61801	46449104 +	FI-0021	FI-0019	FI-4
SIENA(96-) 1.2/1.6L		61683	46833511 +	FI-0022	FI-0023	FI-4
SIENA(96-) 1.2/1.6L				FI-0024	FI-0023	FI-4
SIENA(96-) 1.2/1.6L		61684	46826678 +	FI-0025	FI-0026	FI-4
SIENA(96-) 1.2/1.4/1.6L		61802	46417059 +	FI-0018	FI-0019	FI-3
SIENA(96-) 1.2/1.4/1.6L				FI-0018	FI-0020	FI-3
SIENA(05-) 1.2/1.4L		61782	46779393 +	FI-0041	FI-0042	FI-7
SIENA(05-) 1.2/1.4L				FI-0043	FI-0044	FI-7
SIENA(05-) 1.2/1.4L				FI-0045	FI-0044	FI-7
SIENA(05-) 1.2/1.4L				FI-0046	FI-0047	FI-7
STRADA(99-) 1.2L		61802	46417059 +	FI-0018	FI-0019	FI-3
STRADA(99-) 1.2L				FI-0018	FI-0020	FI-3
TIPO(93-) 1.9L		61869 +	46404422 +	FI-0013	FI-0014	FI-2
TIPO(93-) 1.9L				FI-0015	FI-0014	FI-3
TIPO(93-) 1.9L				FI-0016	FI-0017	FI-3
TIPO（15-）1.3L				FI-0101	FI-0102	FI-16
TIPO（15-）1.3L				FI-0103	FI-0104	FI-16
UNO(83-89)		61930	7558136	FI-0095	FI-0096	FI-15
UNO(83-89)				FI-0097	FI-0098	FI-15
UNO(83-89)				FI-0099	FI-0096	FI-15
UNO(83-89)				FI-0100	FI-0098	FI-15
FIAT				FI-0029	FI-0030	FI-5
FIAT				FI-0039	FI-0040	FI-6
FIAT				FI-0048	FI-0049	FI-8
FIAT				FI-0050	FI-0051	FI-8
FIAT				FI-0054	FI-0055	FI-8
FIAT				FI-0092	FI-0093	FI-14
FIAT				FI-0094	FI-0093	FI-14
FIAT				FI-0107	FI-0108	FI-16
FIAT				FI-0107	FI-0109	FI-17
FIAT			51851016	FI-0110	FI-0111	FI-17
FIAT				FI-0112	FI-0113	FI-17
FIAT				FI-0114	FI-0113	FI-17
FIAT				FI-0116	FI-0117	FI-18
FIAT		617869	51888085	FI-0118	FI-0119	FI-18

FUSO

BUS				MI-0169	MI-0170	MI-31
BUS				MI-0171	MI-0172	MI-31
BUS				MI-0173	MI-0174	MI-31
BUS				MI-0175	MI-0176	MI-31
BUS				MI-0177	MI-0176	MI-32

Model	DPI	NISSENS	OEM	Hongyan		Page
BUS				MI-0178	MI-0176	MI-32
BUS				MI-0179	MI-0176	MI-32
BUS				MI-0180	MI-0176	MI-32
FUSO BUS				MI-0202	MI-0203	MI-35
FUSO BUS				MI-0307	MI-0176	MI-52
FUSO BUS				MI-0308	MI-0176	MI-52
FUSO BUS				MI-0309	MI-0176	MI-53
FUSO BUS				MI-0310	MI-0176	MI-53
CANTER(95-)				MI-0165	MI-0166	MI-30
CANTER(99-)			MC127001	MI-0057	MI-0058	MI-12
CANTER(02-05)				MI-0134	MI-0135	MI-25
CANTER(02-05)				MI-0134	MI-0136	MI-25
CANTER(02-05)				MI-0134	MI-0164	MI-30
CANTER				MI-0137	MI-0138	MI-26
CANTER				MI-0137	MI-0139	MI-26
CANTER				MI-0137	MI-0140	MI-26
CANTER				MI-0167	MI-0168	MI-30
CANTER				MI-0055	MI-0056	MI-12
CANTER				MI-0228	MI-0229	MI-40
CANTER				MI-0228	MI-0230	MI-40
CANTER				MI-0228	MI-0231	MI-40
CANTER(02-05）				MI-0134	MI-0288	MI-49
FIGHTER				MI-0104	MI-0105	MI-20
SUPER GREAT				MI-0154	MI-0155	MI-28
SUPER GREAT(96-03)				MI-0154	MI-0156	MI-29
FUSO(98-）				MI-0209	MI-0210	MI-37
FUSO(13-）				MI-0303	MI-0304	MI-51
FUSO(14-） 3.5L				MI-0226	MI-0227	MI-39
GEELY						
GEELY				GE-0001	GE-0002	GE-1
GEELY				GE-0003	GE-0002	GE-1
GEELY				GE-0004	GE-0005	GE-1
GEELY				GE-0006	GE-0005	GE-1
GEELY				GE-0007	GE-0008	GE-2
GMC						
ACADIA(07-13) 3.6L	13007		20772532 +	GM-0117	GM-0118	GM-22
C70000(81-85) 7.0L	459 +			GM-0219	GM-0220	GM-42
CANYON(04-12) 2.9/3.7L	2707			GM-0181	GM-0182	GM-35
CANYON(10-12) 5.3L	2855			GM-0223	GM-0224	GM-43
ENVOY(02-09) 4.2L	2458		52485546	GM-0069	GM-0070	GM-16
ENVOY(02-09) 5.3L	2563		15162213	GM-0071	GM-0072	GM-16
JIMMY(92-94) 4.3L	705			GM-0098	GM-0163	GM-32
JIMMY(94-95) 4.3L	1532 +		52462546/7/8/9	GM-0035	GM-0036	GM-7
JIMMY(94-95) 4.3L				GM-0035	GM-0036-1	GM-7
JIMMY(95-05) 4.3L	1825 +		52472963	GM-0033	GM-0034	GM-7
JIMMY(96-05)4.3L				GM-0033	GM-0317	GM-58
LOVA RV(15-)1.5L				GM-0305	GM-0306	GM-56
P3500(89-90) 5.7L	951 +		3092164	GM-0055	GM-0057	GM-13
P3500(94-) 4.3L	726 +		5246532/4	GM-0059	GM-0060	GM-14

Model	DPI	NISSENS	OEM	Hongyan		Page
S15(85-90)2.5L	206 +				GM-0319	GM-58
SAFARI(95-) 4.3L	1688 +		52458028 +	GM-0031-1	GM-0032	GM-6
SAFARI(96-05) 4.3L	1786 +		52472906	GM-0031	GM-0032	GM-6
SAVANA(96-02) 6.5L	2043		15766917	GM-0012	GM-0014	GM-3
SAVANA(03-05) 5.3L				GM-0037	GM-0147	GM-28
SAVANA(03-05) 5.3L	2712			GM-0037	GM-0147-1	GM-28
SAVANA(06-14) 5.3L	2992			GM-0037	GM-0148	GM-28
SAVANA(06-14) 5.3L				GM-0037	GM-0148-1	GM-28
SAVANA(06-14) 5.3L				GM-0037	GM-0148-2	GM-29
SIERRA 2500(01-02) 8.1L	2538			GM-0166	GM-0167	GM-32
SIERRA 2500(01-02) 8.1L				GM-0166	GM-0167	GM-32
SIERRA 3500(01-02) 8.1L	2538			GM-0166-1	GM-0167-1	GM-33
SIERRA 3500(01-02) 8.1L				GM-0166-1	GM-0167-1	GM-33
SIERRA(01-05) 6.6L	2510 +			GM-0189	GM-0190	GM-36
SIERRA(06-10) 6.6L	2857 +			GM-0186	GM-0187	GM-35
SIERRA(09-13)6.0L				GM-0334	GM-0336	GM-61
YUKON(08-13)6.0L	13419			GM-0334	GM-0335	GM-61
SIERRA(09-13)6.0L	13419			GM-0334	GM-0335	GM-61
SIERRA(09-13)6.0L	13419			GM-0334	GM-0336	
SONOMA(91-93)2.5L	206 +				GM-0319	GM-58
SONOMA(91-93) 4.3L	705			GM-0098	GM-0163	GM-32
SONOMA(94-03) 2.2L	1531		3090605	GM-0102	GM-0101-1	GM-20
SONOMA(94-95) 4.3L	1532 +		52462546/7/8/9	GM-0035	GM-0036	GM-7
SONOMA(94-95) 4.3L				GM-0035	GM-0036-1	GM-7
SONOMA(94-95) 4.3L				GM-0035	GM-0036-2	GM-7
SONOMA(96-05) 4.3L	1825 +		52472963	GM-0033	GM-0034	GM-7
SONOMA(96-05)4.3L				GM-0033	GM-0317	GM-58
SIERRA(11-16)6.6L	13244			GM-0312	GM-0313	GM-57
TYPHOON(92-93) 4.3L	705			GM-0098	GM-0163	GM-32
GMC				GM-0017	GM-0329	GM-60
GMC				GM-0166	GM-0330	GM-60
GMC				GM-0179	GM-0331	GM-60
HINO						
700HD			16041E005016081 +	TO-0812	TO-0813	TO-136
700HD				TO-0812	TO-0862	TO-144
MEGRA				TO-0540	TO-0541	TO-91
MEGRA				TO-0542	TO-0543	TO-91
PROFIA(94-)			160815572 +	TO-0547	TO-0548	TO-92
PROFIA(94-)			160816000	TO-0549	TO-0550	TO-92
RAINBOW(99-)				TO-0530	TO-0531	TO-90
RAINBOW(99-)				TO-0532	TO-0533	TO-90
RAINBOW(99-)				TO-0534	TO-0531	TO-90
RAINBOW(99-)				TO-0535	TO-0536	TO-90
RAINBOW(99-)				TO-0535	TO-0537	TO-91
RAINBOW(99-)				TO-0538	TO-0539	TO-91
RAINBOW(99-)				TO-0854	TO-0537	TO-143
RAINBOW(99-)				TO-0855	TO-0537	TO-143
TERAVIE(94-)			160815572 +	TO-0547	TO-0548	TO-92
HINO(10-)				TO-0544	TO-0545	TO-92

Model	DPI	NISSENS	OEM	Hongyan		Page
HINO(10-)				TO-0546	TO-0545	TO-92
HINO(10-)				TO-0848		TO-142
HINO				TO-0551	TO-0552	TO-93
HINO				TO-0616	TO-0545	TO-101
HINO				TO-0617	TO-0537	TO-102
HINO				TO-0618	TO-0619	TO-102
HINO				TO-0620	TO-0621	TO-102
HINO				TO-0622	TO-0623	TO-102
HINO				TO-0624	TO-0625	TO-103
HONDA						
ACCORD(86-89) 2.0L	928			HO-0119	HO-0120	HO-22
ACCORD(86-89) 2.0L				HO-0121	HO-0122	HO-22
ACCORD(90-93) 2.2L	19 +		19010PT1901 +	HO-0009	HO-0010	HO-2
ACCORD(94-97) 2.2L	1494 +		19010PAAA01 +	HO-0001	HO-0002	HO-1
ACCORD(94-97) 2.2L	1581		19010PIE +	HO-0003	HO-0002	HO-1
ACCORD(95-97) 2.7L	1776			HO-0136	HO-0137	HO-24
ACCORD(98-02) 2.3L	2148 +		19010DAAA01 +	HO-0001	HO-0004	HO-1
ACCORD(98-02) 2.3L			19010DAAA02	HO-0003	HO-0004	HO-1
ACCORD(98-02) 2.3L	2203		19010PAAA52	HO-0005	HO-0006	HO-2
ACCORD(98-02) 3.0L	2147		19010P8CA51	HO-0011	HO-0012	HO-2
ACCORD(98-02) 2.3L	2148 +		19010DAAA01/PCA013/014	HO-0244	HO-0004	HO-41
ACCORD(03-04) 2.4L	2569 +		19010RAAA61 +	HO-0024	HO-0025	HO-5
ACCORD(03-04) 2.4L				HO-0026	HO-0025	HO-5
ACCORD(03-04) 2.4L	2569 +		19010RAAA61/A01	HO-0240	HO-0025	HO-41
ACCORD(03-07) 3.0L				HO-0077	HO-0078	HO-14
ACCORD(03-07) 3.0L	2571 +		19010RCAA52	HO-0079	HO-0078	HO-14
ACCORD(08-) 2.2L		68137		HO-0191	HO-0192	HO-33
ACCORD(08-12) 2.4L	2990		19010R40A52 +	HO-0101	HO-0102	HO-18
ACCORD(08-12) 2.4L				HO-0101	HO-0102-1	HO-18
ACCORD(08-12) 2.4L				HO-0101	HO-0102-2	HO-18
ACCORD（08-）2.2L(DIESEL)		68137		HO-0191	HO-0192	HO-33
ACCORD(08-12) 3.5L	2989			HO-0133	HO-0135	HO-24
ACCORD(13-15) 2.4L	13363			HO-0157	HO-0158	HO-28
ACCORD（14-15)2.0 E/G	13418		190105K0A01	HO-0209	HO-0210	HO-35
ACCORD(16-) 2.4L				HO-0229	HO-0230	HO-38
CITY (08-11)				HO-0095	HO-0096	HO-17
CIVIC/CONCERTO（87-92）			19010PM3003 +	HO-0220	HO-0221	HO-37
CIVIC(88-91) 1.5/1.6L				HO-0097	HO-0098	HO-17
CIVIC(88-91) 1.5/1.6L	886		1900401PM8A02	HO-0099	HO-0100	HO-17
CIVIC(88-91) 1.5/1.6L				HO-0099	HO-0100-1	HO-17
CIVIC(88-91) 1.5/1.6L				HO-0099	HO-0100-2	HO-18
CIVIC(88-93)1.5L	886		1900401PM8A02	HO-0238	HO-0100	HO-40
CIVIC(88-93) 1.5/1.6L	1943 +			HO-0239	HO-0100	HO-40
CIVIC(92-00) 1.5/1.6L	1290 +		19010P03901 +	HO-0018	HO-0019	HO-4
CIVIC(92-00) 1.5/1.6L	1419 +		19010P28G51 +	HO-0020	HO-0019	HO-4
CIVIC(92-00) 1.5/1.6L			19010P30J02 +	HO-0021	HO-0022	HO-4
CIVIC(92-00) 1.5/1.6L	1570		19010P30G01	HO-0023	HO-0022	HO-4
CIVIC(01-05) 1.7L	2354 +		19010PMMA51 +	HO-0031	HO-0032	HO-6
CIVIC(01-05) 1.7L	2354 +		19010PMMA51 +	HO-0033	HO-0034	HO-6

Model	DPI	NISSENS	OEM	Hongyan		Page
CIVIC(02-05) 2.0L	2574		19010PRA003	HO-0039	HO-0040	HO-7
CIVIC(03-05) 1.3L	2572		19010PZAA51	HO-0037	HO-0038	HO-6
CIVIC(06-11) 1.8L	2922 +		19010RNBC51	HO-0061	HO-0062	HO-11
CIVIC(06-11) 1.8L				HO-0061	HO-0062-1	HO-11
CIVIC(06-11) 1.8L				HO-0061	HO-0063	HO-11
FAI(11-)			19010RSAG01	HO-0231	HO-0232	HO-39
FAI(11-)			19010RSAG01	HO-0231	HO-0232-1	HO-39
FAI(11-)				HO-0231	HO-0233	HO-39
CIVIC(12-13) 1.8L	13257			HO-0108	HO-0109	HO-20
CIVIC(12-13) 1.8L				HO-0108	HO-0109-1	HO-20
CIVIC(12-13) 1.8L	13221			HO-0108	HO-0110	HO-20
CITY(15-）				HO-0225	HO-0226	HO-38
CITY(15-)				HO-0225	HO-0227	HO-38
CITY(15-)				HO-0225	HO-0228	HO-38
CROSSTOUR(12-15) 2.4L	2990		19010R40A52 +	HO-0101	HO-0102	HO-18
CROSSTOUR(12-15) 2.4L				HO-0101	HO-0102-1	HO-18
CROSSTOUR(12-15) 2.4L				HO-0101	HO-0102-2	HO-18
CROSSTOUR(12-15) 3.5L	2989			HO-0133	HO-0135	HO-24
CR-V(97-01) 2.0L	2051		19010P3F901	HO-0053	HO-0054	HO-9
CR-V(97-01) 2.0L				HO-0055	HO-0054	HO-9
CR-V(97-01) 2.0L	2051	8012A 681021 68101	19010P3F901/902 19010PF004014	HO-0236	HO-0237	HO-40
CR-V(02-06) 2.4L			19010PPAA51 +	HO-0043	HO-0044	HO-7
CR-V(02-06) 2.4L	2443 +	68103	19010PPAA51 +	HO-0043	HO-0044-1	HO-7
CR-V(06-) 2.2L		68092	19010R06E01	HO-0093	HO-0094	HO-16
CR-V(07-09) 2.4L	2954 +		19010RZAA51	HO-0103	HO-0104	HO-19
CR-V(07-09) 2.4L	13031 +		19010RZAA51	HO-0103	HO-0105	HO-19
CR-V(07-09) 2.4L			19010RZAA51	HO-0106	HO-0104	HO-19
CR-V(12-14) 2.4L	13314			HO-0107	HO-0104	HO-19
CRX(88-91) 1.5/1.6L				HO-0097	HO-0098	HO-17
CRX(88-91) 1.5/1.6L	886		1900401PM8A02	HO-0099	HO-0100	HO-17
CRX(88-91) 1.5/1.6L				HO-0099	HO-0100-1	HO-17
CRX(88-91) 1.5/1.6L				HO-0099	HO-0100-2	HO-18
CRX(88-91)1.5L	886		1900401PM8A02	HO-0238	HO-0100	HO-40
CRX(88-91) 1.5/1.6L	1943 +			HO-0239	HO-0100	HO-40
ELEMENT(07-11) 2.4L	13015			HO-0043	HO-0127	HO-23
FIT(03-) 1.6L			19010REJW51 +	HO-0047	HO-0048	HO-8
FIT(03-) 1.6L			19010REJW51 +	HO-0047	HO-0048-1	HO-8
FIT(07-08) 1.5L				HO-0065	HO-0066	HO-12
FIT(07-08) 1.5L	2955		19010RMNW51 +	HO-0065	HO-0066-1	HO-12
FIT(09-12) 1.5L				HO-0084	HO-0085	HO-15
FIT(09-13) 1.5L	13068		19010RB1J51	HO-0086	HO-0087	HO-15
FIT(09-13) 1.5L				HO-0086	HO-0087-1	HO-15
FIT(09-13) 1.5L				HO-0088	HO-0089	HO-15
FIT(09-13) 1.5L				HO-0088	HO-0089-1	HO-16
FIT(15-17） 1.5L	13451		190105R1901	HO-0222	HO-0223	HO-37
FIT(15-17） 1.5L				HO-0222	HO-0224	HO-37
FIT				HO-0169	HO-0087	HO-29
FIT				HO-0213	HO-0214	HO-36
FIT				HO-0213	HO-0215	HO-36
FR-V(04-)			1910RJH901	HO-0175	HO-0176	HO-30
FR-V(04-)			1910RJJ901	HO-0177	HO-0178	HO-30

Model	DPI	NISSENS	OEM	Hongyan		Page
INSIGHT(00-06) 1.0L	2745		19010PHM003 +	HO-0138	HO-0139	HO-25
MOBILIO(01-03)			19010PYD902 +	HO-0111	HO-0112	HO-20
MOBILIO SPIKE			19010RFA901	HO-0193	HO-0194	HO-33
MOBILIO SPIKE			19010RFA901	HO-0193	HO-0194-1	HO-33
ODYSSEY(99-04) 3.5L	2270		19010P8FA51	HO-0056	HO-0057	HO-10
ODYSSEY(05-10)			19010PT0209	HO-0049	HO-0050	HO-8
ODYSSEY(05-10)			19010PT0209	HO-0049	HO-0050-1	HO-9
ODYSSEY(05-10) 3.5L	2806		19010RGLA51	HO-0075	HO-0076	HO-13
ODYSSEY(05-10) 3.5L				HO-0075	HO-0076-1	HO-13
ODYSSEY(15-）				HO-0203	HO-0204	HO-35
PASSPORT(94-96) 2.6	1446		949384433	HO-0059	HO-0060	HO-10
PILOT(03-04) 3.5L	2417		19010PHGKA51	HO-0056	HO-0057-1	HO-10
PILOT(05-) 3.5L	2740		19010RDJA51	HO-0058	HO-0057-1	HO-10
PILOT(09-14) 3.5L	13065			HO-0075	HO-0130	HO-23
PRELUDE(92-96) 2.3L	1572 +		19010P14A11	HO-0069	HO-0070	HO-12
PRELUDE(97-01) 2.2L	1494 +		19010PAAA01 +	HO-0001	HO-0002	HO-1
RIDGELINE(09-14) 3.5L	13065			HO-0075	HO-0130	HO-23
S2000(00-09) 2.0/2.2L	2344		19010PCX003 +	HO-0091	HO-0092	HO-16
STEP WAGON				HO-0182	HO-0183	HO-31
STEP WAGON				HO-0182	HO-0183-1	HO-31
STREAM(01-03) 2.0L	2573		19010PNAH51 +	HO-0045	HO-0046	HO-8
STREAM(01-04) 1.7L			19010PSA901	HO-0035	HO-0036	HO-6
VEZEL(14-) 1.5L				HO-0165	HO-0166	HO-29
VEZEL(14-) 1.8L				HO-0167	HO-0168	HO-29
VEZEL（14-）				HO-0170	HO-0201	HO-34
VEZEL				HO-0165	HO-0202	HO-34
HONDA			19010PGM902/901	HO-0007	HO-0008	HO-2
HONDA			19010PNC901 +	HO-0029	HO-0030	HO-5
HONDA				HO-0041	HO-0042	HO-7
HONDA				HO-0051	HO-0052	HO-9
HONDA			19010PWAGO1	HO-0073	HO-0074	HO-13
HONDA				HO-0090	HO-0089	HO-16
HONDA				HO-0113	HO-0114	HO-21
HONDA				HO-0140	HO-0141	HO-25
HONDA				HO-0142	HO-0143	HO-25
HONDA				HO-0144	HO-0143	HO-25
HONDA				HO-0145	HO-0146	HO-26
HONDA				HO-0147	HO-0148	HO-26
HONDA				HO-0147	HO-0149	HO-26
HONDA				HO-0147	HO-0150	HO-26
HONDA			19010R20003/R21003	HO-0151	HO-0152	HO-27
HONDA			19010R20901/R21901	HO-0151	HO-0153	HO-27
HONDA				HO-0154	HO-0048	HO-27
HONDA				HO-0155	HO-0156	HO-27
HONDA				HO-0159	HO-0160	HO-28
HONDA				HO-0161	HO-0162	HO-28
HONDA				HO-0163	HO-0164	HO-28
HONDA				HO-0170	HO-0171	HO-29
HONDA				HO-0172	HO-0173	HO-30
HONDA				HO-0172	HO-0174	HO-30
HONDA				HO-0179	HO-0180	HO-31

Model	DPI	NISSENS	OEM	Hongyan		Page
HONDA				HO-0179	HO-0181	HO-31
HONDA				HO-0184	HO-0185	HO-32
HONDA				HO-0184	HO-0186	HO-32
HONDA				HO-0187	HO-0188	HO-32
HONDA				HO-0189	HO-0190	HO-32
HONDA				HO-0195	HO-0196	HO-33
HONDA				HO-0197	HO-0198	HO-34
HONDA				HO-0199	HO-0200	HO-34
HONDA				HO-0207	HO-0208	HO-35
HONDA			19010RA0J01	HO-0216	HO-0217	HO-36
HONDA				HO-0218		HO-37
HONDA				HO-0029	HO-0235	HO-40
HONDA			19010PEF003	HO-0245	HO-0246	HO-42
HONDA				HO-0247	HO-0248	HO-42
HOLDEN						
BARINA(08-)				HOL-0020	HOL-0021	HOL-6
COMNODORE(92-)				HOL-0022	HOL-0023	HOL-6
COMMODORE(93-97)				HOL-0015	HOL-0016	HOL-5
COMMODORE(97-00)				HOL-0009	HOL-0010	HOL-4
COMMODORE(97-00)				HOL-0011	HOL-0010-1	HOL-4
COMMODORE(97-00)				HOL-0011-1	HOL-0010-1	HOL-4
COMMODORE(97-00)				HOL-0012	HOL-0013	HOL-4
COMMODORE(97-00)				HOL-0012-1	HOL-0013-1	HOL-5
COMMODORE(97-00)				HOL-0014	HOL-0013	HOL-5
COMMODORE(97-00)				HOL-0014-1	HOL-0013	HOL-5
COMMODORE(02-04)				HOL-0001	HOL-0002	HOL-1
COMMODORE(02-04)				HOL-0001-1	HOL-0002	HOL-1
COMMODORE(02-04)				HOL-0001-2	HOL-0002	HOL-1
COMMODORE(05-)				HOL-0006	HOL-0007	HOL-3
COMMODORE(05-)				HOL-0006	HOL-0007-1	HOL-3
COMMODORE(05-)				HOL-0006	HOL-0008	HOL-3
COMMODORE(05-)				HOL-0006	HOL-0008-1	HOL-3
COMMODORE				HOL-0003	HOL-0002	HOL-1
COMMODORE				HOL-0003-1	HOL-0002	HOL-2
COMMODORE				HOL-0003-2	HOL-0002	HOL-2
COMMODORE				HOL-0004	HOL-0005	HOL-2
COMMODORE				HOL-0004-1	HOL-0005	HOL-2
COMMODORE				HOL-0017	HOL-0018	HOL-6
COMMODORE				HOL-0019	HOL-0018	HOL-6
HUMMER						
H2(03-09) 6.0/6.2L	2370 +		15193114	GM-0021	GM-0022	GM-5
H2(03-09) 6.0/6.2L				GM-0021-1	GM-0022	GM-5
H3(06-10) 3.7L	2855			GM-0223	GM-0224	GM-43
HYUNDAI						
ACCENT(95-96) 1.5L	2700	670011	2531022120 +	HY-0001	HY-0003	HY-01
ACCENT(95-96) 1.5L	2700	670011	2531022120 +	HY-0001	HY-0003-1	HY-01
ACCENT(95-96) 1.5L				HY-0001	HY-0004	HY-02
ACCENT(95-96) 1.5L				HY-0001	HY-0004-1	HY-02
ACCENT(95-99)				HY-0057	HY-0058	HY-09

Model	DPI	NISSENS	OEM	Hongyan		Page
ACCENT(97-99) 1.5L	1816	622971	2531022025	HY-0001	HY-0002	HY-01
ACCENT(97-99) 1.5L	1816	622971	2531022025	HY-0001	HY-0002-1	HY-01
ACCENT(99-) 1.3/1.5/1.6L			2531025050	HY-0067	HY-0068	HY-11
ACCENT(99-) 1.3/1.5/1.6L		67022	2531025050	HY-0067	HY-0069	HY-12
ACCENT(99-) 1.5L		67049	253125810	HY-0085	HY-0086	HY-14
ACCENT(00-04) 1.3/1.5/1.6L	2338	67023	2531025050 +	HY-0059	HY-0060	HY-10
ACCENT(00-04) 1.3/1.5/1.6L				HY-0059	HY-0061-1	HY-10
ACCENT(00-04) 1.3/1.5/1.6L			2531022025	HY-0070	HY-0071	HY-12
ACCENT(00-04) 1.3/1.5/1.6L				HY-0070	HY-0072	HY-12
ACCENT(00-04) 1.3/1.5/1.6L				HY-0059	HY-0060-1	HY-10
ACCENT(00-04) 1.3/1.5/1.6L				HY-0059	HY-0061	HY-10
ACCENT(05-10) 1.5L		67504	253101E300 +	HY-0077	HY-0078	HY-13
ACCENT(06-11) 1.6L	2896	67502 +	2531010 +	HY-0075	HY-0076	HY-13
ACCENT(12-15) 1.6	13252 +	66756 +	253101R000 +	HY-0101	HY-0102	HY-16
ACCENT(12-15) 1.6L				HY-0103	HY-0104	HY-16
ACCENT（06-11)1.6L/06-10	2896	67502/3 +	2531010 +	HY-0075	HY-0199	HY-31
ATOS(98-) 1.0L		67016A	253100250 +	HY-0065	HY-0066	HY-11
AZERA(06-11) 3.3/3.8L	2831 +	67507	253103K080 +	HY-0079	HY-0080	HY-13
AZERA（06-11)3.3/3.8L	2831 +	66998 +	253103K080 +	HY-0079-1	HY-0200	HY-32
ELANTRA(92-95) 1.6/1.8L	1399	62293	2531028150 +	HY-0026	HY-0027	HY-05
ELANTRA(92-95) 1.6/1.8L			2531028150 +	HY-0028	HY-0029	HY-05
ELANTRA(92-95) 1.6/1.8L				HY-0030	HY-0027	HY-06
ELANTRA(92-95)1.6/1.8L	1399			HY-0232	HY-0233	HY-37
ELANTRA(96-00) 1.8/2.0L	1897		2531027000 +	HY-0018	HY-0019	HY-04
ELANTRA(96-00) 1.8/2.0L	2391		2531027000	HY-0022	HY-0023	HY-05
ELANTRA(00-) 1.6/2.0L		67025	253102D510 +	HY-0051	HY-0052	HY-09
ELANTRA(00-) 2.0L		67469	253102D400	HY-0007	HY-0006	HY-02
ELANTRA(01-06) 2.0L	2586		25B102D000	HY-0008	HY-0009	HY-03
ELANTRA(01-06) 2.0L	2387	67468	253102D110	HY-0005	HY-0006	HY-02
ELANTRA(07-12) 1.0L	2928		253102H050	HY-0081	HY-0082	HY-13
ELANTRA(11-13) 1.8L	13333	67555	253103X010 +	HY-0113	HY-0115	HY-18
ELANTRA(11-13)1.8L	13202	675014	253103X100	HY-0113	HY-0114	HY-18
ELANTRA(15-16) 1.8/2.0L	13412		253103X500 +	HY-0116	HY-0115	HY-18
ELANTRA（17-）				HY-0197	HY-0198	HY-31
ELANTRA（16-）1.4T				HY-0218	HY-0219	HY-35
EXCEL(90-94) 1.5L	1081 +		2531024000 +	HY-0020		HY-04
EXCEL(90-94) 1.5L				HY-0024	HY-0025	HY-05
GALLOPER(91-) 2.5L		67046	HR171401	HY-0143	HY-0144	HY-22
GALLOPER（98-）		67046 +	HR171401 +	HY-0143	HY-0215	HY-34
GENESIS(09-11)4.6L	13085		253103M180 +	HY-0126	HY-0128	HY-20
GENESIS COUPE(09-12) 3.8L	13059		253102M300 +	HY-0126	HY-0127	HY-20
GENESIS COUPE(10-12) 2.0L	13120	67554	253102M100	HY-0131	HY-0132	HY-21
GENESIS COUPE（13-14）2.0L	13420		253102M500	HY-0191	HY-0192	HY-30
GENESIS（15-）3.8L	13455		25310B1140	HY-0177	HY-0178	HY-28
GETZ(02-09) 1.1/1.3/1.4/1.5L		67093	253101C200	HY-0141	HY-0142	HY-22
GETZ(02-09) 1.1/1.3/1.5/1.6L		67487	253101C350	HY-0162	HY-0163	HY-26
GETZ(03-09) 1.5L				HY-0160	HY-0161	HY-26
GETZ(06-09) 1.5L		67512	253101C600	HY-0158	HY-0159	HY-25
ENTOURAGE（07-10）3.8L				KI-0132	KI-0133	KI-20
H-1(97-01) 2.5L		67498 +	253004B100	HY-0037	HY-0039	HY-07
H-1(97-01) 2.5L		67497	253104B600	HY-0037	HY-0038	HY-07

Model	DPI	NISSENS	OEM	Hongyan		Page
H-1(07-)2.5L		67095	253104H100 +	HY-0091	HY-0092	HY-15
H-1(08-15)2.5L		67472 +	253104H550 +	HY-0093	HY-0094	HY-15
H-1(97-01)2.5L				HY-0226	HY-0038	HY-36
H100(93-00) 2.4/2.5L		67034	2530043000	HY-0040	HY-0042	HY-07
H100(93-00) 2.4/2.5L		67015	2530043600 +	HY-0040	HY-0041	HY-07
H100(93-00) 2.5L		67497	253104B600	HY-0037	HY-0038	HY-07
H100(93-00) 2.5L		67498 +	253004B100	HY-0037	HY-0039	HY-07
H100(93-00) 2.5L/93-00 H150 2.5L				HY-0226	HY-0038	HY-36
H100(93-00)2.4/2.5L				HY-0227	HY-0041	HY-36
H100(93-00)2.4/2.5L				HY-0228	HY-0041	HY-36
H100(93-97)2.4/2.5L				HY-0133	HY-0134	HY-21
H100(04-)2.5L		66966	253104F210	HY-0135	HY-0136	HY-21
H150(93-00) 2.4/2.5L		67015	2530043600 +	HY-0040	HY-0041	HY-07
H150(93-00) 2.4/2.5L		67034	2530043000	HY-0040	HY-0042	HY-07
H150(93-00) 2.5L		67497	253104B600	HY-0037	HY-0038	HY-07
H150(93-00) 2.5L		67498 +	253004B100	HY-0037	HY-0039	HY-07
H150(93-00) 2.5L				HY-0226	HY-0038	HY-36
H150(93-00)2.4/2.5L				HY-0227	HY-0041	HY-36
H150(93-00)2.4/2.5L				HY-022	HY-0041	HY-36
H200(97-) 2.4/2.5L				HY-0062	HY-0063	HY-11
H200(97-) 2.4/2.5/2.6L		670381 +	253104A000 +	HY-0062	HY-0064	HY-11
H200（97-)2.4/2.5L				HY-0201	HY-0063	HY-32
H200（97-)2.4/2.5/2.6L(DIESEL)		670381 +	253104A000 +	HY-0062	HY-0202	HY-32
I10(07-15) 1.1L		67610	253100X000 +	HY-0087	HY-0088	HY-14
I10(08-15) 1.2L		67547	253100X150 +	HY-0089	HY-0090	HY-14
I10（13-）		675024	23510B9000	HY-0193	HY-0194	HY-30
I10（13-）				HY-0193	HY-0194-1	HY-31
I20(08-15) 1.2/1.4L		67548 +	253101J050 +	HY-0106	HY-0107	HY-17
I20(08-15) 1.4L		67616 +		HY-0108	HY-0109	HY-17
I20(08-15) 1.4L				HY-0108	HY-0110	HY-17
I20(08-15) 1.4L		67615		HY-0111	HY-0112	HY-17
I20(12-14) 1.4L		675002 +	253101R300	HY-0101	HY-0105	HY-16
IX35(10-15) 2.0/2.4L				HY-0125	HY-0124	HY-20
IX35(10-15) 2.0/2.4L		67466		HY-0123	HY-0124	HY-20
LANTRA(00-) 1.5/1.6/2.0L		67025	253102D510 +	HY-0051	HY-0052	HY-09
MATRIX(01) 1.5L		67484	2531017800	HY-0097	HY-0098	HY-15
MATRIX(01-10) 1.5/1.6/1.8L		67480	2531017100	HY-0073	HY-0074	HY-12
MISTRA(12-)				HY-0148	HY-0149	HY-24
MISTRA(13-）1.6T				HY-0216	HY-0217	HY-34
SANTA FE(01-06) 2.4/2.7L	2389 +	67030	2531026050 +	HY-0010	HY-0011	HY-03
SANTA FE(01-06) 2.4/2.7L	2389 +	67030	2531026050 +	HY-0012	HY-0013	HY-03
SANTA FE(03-06) 2.0L		675017	2531026410	HY-0053	HY-0054	HY-09
SANTA FE(07-09) 2.7/3.3L	2997		253100W000 +	HY-0137	HY-0138	HY-22
SANTA FE(10-12) 2.4/3.5L	13191 +		253101U250	HY-0119	HY-0120	HY-19
SANTA FE(10-12) 2.4/3.5L				HY-0119-1	HY-0120	HY-19
SANTA FE(10-12) 2.4/3.5L	13191 +		253101U250	HY-0119	HY-0120	HY-19
SANTA FE(10-12)2.4/3.5L				HY-0119-1	HY-0120	HY-19
SANTA FE(10-14) 2.4/3.3/3.5L	13194	67522 +	253101U200 +	HY-0121	HY-0122	HY-19
SANTA FE(10-14) 2.4/3.3/3.5L	13194	67522 +	253101U200 +	HY-0121-1	HY-0122	HY-19
SANTA FE(10-15) 2.0L	13373	67518	253102B850	HY-0147-1	HY-0122	HY-23
SANTA FE(10-15) 2.0L	13373	67518	253102B850	HY-0147	HY-0122	HY-23

Model	DPI	NISSENS	OEM	Hongyan		Page
SANTAMO(97-)				HY-0152	HY-0153	HY-24
SCOUPE(91-92) 1.5L	1081 +		2531024000 +	HY-0020		HY-04
SCOUPE(91-92) 1.5L				HY-0024	HY-0025	HY-05
SCOUPE(91-92)1.5L				HY-0234	HY-0235	HY-37
SONATA(92-94) 2.0/3.0L	1286 +		2531033050 +	HY-0031	HY-0032	HY-06
SONATA(92-94) 2.0/3.0L				HY-0033	HY-0034	HY-06
SONATA(92-94) 2.0/3.0L		67004	2531033A10 +	HY-0035	HY-0036	HY-06
SONATA (99-05)2.4/2.7L	2339	67026	2531038001 +	HY-0015	HY-0011	HY-04
SONATA(99-05) 2.4/2.7L				HY-0016	HY-0017	HY-04
SONATA(04-)				HY-0230	HY-0231	HY-37
SONATA(06-10) 2.4/3.3L	2831 +	67507	253103K080 +	HY-0079	HY-0080	HY-13
SONATA(06-10) 2.4/3.3L	2831 +	66998 +	253103K080 +	HY-0079-1	HY-0200	HY-32
SONATA(11-14) 2.0L	13189		253103Q600	HY-0145	HY-0146	HY-23
SONATA(11-14) 2.0L	13189		253103Q600	HY-0145-1	HY-0146	HY-23
SONATA(11-14) 2.4L	13249		253104R000	HY-0150	HY-0151	HY-24
SONATA(15-)				HY-0166	HY-0167	HY-26
SONATA（15-）2.4L				HY-0168	HY-0169	HY-27
SONATA（15-）2.4L	13457		25310C2000	HY-0179	HY-0180	HY-28
SONATA（15-）2.0L T				HY-0181	HY-0182	HY-29
SONATA（15- ）1.6L				HY-0183	HY-0182	HY-29
SORENTO(11-15) 2.4/3.3/3.5L	13194	67522 +	253101U200 +	HY-0121	HY-0122	HY-19
SORENTO(11-15) 2.4/3.3/3.5L	13194	67522 +	253101U200 +	HY-0121-1	HY-0122	HY-19
TB(02-09) 1.1/1.3/1.4/1.5L		67093	253101C200	HY-0141	HY-0142	HY-22
TERRACAN(01-03) 3.0L		67482	25310H1310	HY-0154	HY-0155	HY-24
TERRACAN(01-03) 2.5L				HY-0157	HY-0155	HY-25
TERRACAN(01-03) 2.5L				HY-0157	HY-0156	HY-25
TERRACAN(01-03) 3.0L				HY-0154	HY-0156	HY-25
TIBURON(97-01) 1.8/2.0L	1897		2531027000 +	HY-0018	HY-0019	HY-04
TIBURON(97-01) 1.8/2.0L	2391		2531027000	HY-0022	HY-0023	HY-05
TIBURON(03-08) 2.7L	2387	67468	253102D110	HY-0005	HY-0006	HY-02
TIBURON(03-08) 2.7L	2586		25B102D000	HY-0008	HY-0009	HY-03
TRAJET(00-08) 2.0/2.7L		67032	253103A000 +	HY-0014	HY-0011	HY-03
TRUCK			253015H601	HY-0055	HY-0056	HY-09
TUCSON(04-10) 2.0L		67486	253102E500 +	HY-0047	HY-0048	HY-08
TUCSON(04-10) 2.0L		67479	253102E100 +	HY-0049	HY-0050	HY-08
TUCSON(05-) 2.7L			253102E800 +	HY-0045	HY-0046	HY-08
TUCSON(05-) 2.0L				HY-0139	HY-0140	HY-22
TUCSON(05-07) 2.7L	2785 +		253102E800 +	HY-0043	HY-0044	HY-08
TUCSON(10-15) 2.0/2.4L	13150	67514 +	253102S550 +	HY-0117	HY-0118	HY-18
TUCSON（16-）2.0L	13576		25310D3500	HY-0184	HY-0185	HY-29
TUCSON（16-）2.0L				HY-0186	HY-0185	HY-29
VERACRUZ(07-12) 3.8L	2959		253103J100	HY-0095	HY-0096	HY-15
HYUNDAI				HY-0083	HY-0084	HY-14
HYUNDAI				HY-0099	HY-0100	HY-16
HYUNDAI				HY-0129	HY-0130	HY-21
HYUNDAI				HY-0164	HY-0165	HY-26
HYUNDAI				HY-0170	HY-0171	HY-27
HYUNDAI				HY-0170-1	HY-0171	HY-27
HYUNDAI				HY-0174	HY-0175	HY-28
HYUNDAI				HY-0176	HY-0175	HY-28
HYUNDAI				HY-0187	HY-0188	HY-30

Model	DPI	NISSENS	OEM	Hongyan		Page
HYUNDAI				HY-0189	HY-0190	HY-30
HYUNDAI				HY-0195	HY-0196	HY-31
HYUNDAI				HY-0203	HY-0204	HY-32
HYUNDAI				HY-0205	HY-0206	HY-33
HYUNDAI				HY-0207	HY-0208	HY-33
HYUNDAI				HY-0209	HY-0208	HY-33
HYUNDAI				HY-0210	HY-0211	HY-33
HYUNDAI				HY-0212	HY-0213	HY-34
HYUNDAI				HY-0168	HY-0214	HY-34
HYUNDAI				HY-0053	HY-0220	HY-35
HYUNDAI				HY-0221	HY-0222	HY-35
HYUNDAI				HY-0225	HY-0011	HY-36
HYUNDAI				HY-0225	HY-0011	HY-36
HYUNDAI				HY-0223	HY-0224	HY-35
HYUNDAI				HY-0236		HY-38
KIA						
BESTA(96-01) 2.2L		66667	0K71E15200A +	KI-0049	KI-0050	KI-08
BESTA(97-02) 2.7L		66645 +	OK60B15200 +	KI-0017	KI-0018	KI-03
BESTA(97-02) 2.7L				KI-0017	KI-0019	KI-03
BONGO(10-)				KI-0059	KI-0060	KI-09
BONGO(10-)				KI-0061	KI-0060	KI-09
BONGO				KI-0138	KI-0139	KI-21
BONGO				KI-0167	KI-0168	KI-26
CARENS(02-) 2.0L		66636 +	OK2KC15200 +	KI-0032	KI-0033	KI-05
CARENS(02-) 2.0L				KI-0029	KI-0030	KI-05
CARENS(02-) 2.0L		66634 +	OKAFA15200 +	KI-0029	KI-0031	KI-05
CARENS(02-)2.0L				KI-0029	KI-0153	KI-24
CARENS(06-11) 2.0L	2961 +	66685	253101D110 +	KI-0070	KI-0071	KI-11
CARENS(06-15) 2.0L		66684 +	253101D200 +	KI-0072	KI-0073	KI-11
CARNIVAL(99-06) 2.9L		66618 +	0K55215200A +	KI-0093	KI-0092	KI-14
CARNIVAL(99-06) 2.9L				KI-0094	KI-0092	KI-14
CARNIVAL(01-) 2.5L		66640 +	OK58815200A	KI-0091	KI-0092	KI-14
CEE'D (12-)1.6L		66775	25310A2000	KI-0145	KI-0151	KI-23
CERATO(04-) 2.0L		66680	253102F300	KI-0126	KI-0127	KI-19
CERATO(05-10) 1.5L		66681	253102F500	KI-0115	KI-0116	KI-18
CERATO(05-10) 2.0L		66680	253102F300	KI-0115	KI-0117	KI-18
CERATO				KI-0113	KI-0114	KI-18
CERATO				KI-0164	KI-0114	KI-25
CLARUS(96-03) 1.8/2.0L		66615 +	0K9B015200 +	KI-0001	KI-0002	KI-01
CLARUS(96-03) 1.8/2.0L		66615 +	0K9B015200 +	KI-0001	KI-0002-1	KI-01
CLARUS(96-03) 1.8/2.0L		66656	0K9A215200	KI-0003	KI-0004	KI-01
CLARUS(96-03) 1.8/2.0L		66656	0K9A215200	KI-0003	KI-0004-1	KI-01
CREDOS(96-01) 1.8/2.0L		66615 +	0K9B015200 +	KI-0001	KI-0002	KI-01
CREDOS(96-01) 1.8/2.0L		66615 +	0K9B015200 +	KI-0001	KI-0002-1	KI-01
CREDOS(96-01) 1.8/2.0L		66656	0K9A215200	KI-0003	KI-0004	KI-01
CREDOS(96-01) 1.8/2.0L		66656	0K9A215200	KI-0003	KI-0004-1	KI-01
EIS				KI-0128	KI-0129	KI-20
FORTE(10-) 2.0L				KI-0099	KI-0100	KI-15
FORTE(10-13) 2.0/2.4L	13133 +		253101M100 +	KI-0066	KI-0067	KI-10
FORTE(13-14)1.8/2.0L	13333	67555	253103X010 +	HY-0113	HY-0115	HY-18

Model	DPI	NISSENS	OEM	Hongyan		Page
FORTE(14-16)1.6L	13518	67607 +	25310A5800 +	KI-0145	KI-0163	KI-25
GRAND CARNIVAL(06-)				KI-0064	KI-0065	KI-10
K2500(02-07)				KI-0111	KI-0112	KI-17
K3				KI-0074	KI-0075	KI-11
K4(12-)				KI-0158	KI-0159	KI-24
K4(15-)1.6T				KI-0160	KI-0159	KI-25
KX3(15-）				KI-0145	KI-0146	KI-22
KX5(16-)				KI-0161	KI-0162	KI-25
K-SERIE(01-04) 2.5L		66645 +	OK60B15200 +	KI-0017	KI-0018	KI-03
K-SERIE(01-04) 2.5L				KI-0017	KI-0019	KI-03
K-SERIE(01-04) 2.5L				KI-0118	KI-0119	KI-18
K-SERIE(01-04) 2.5L				KI-0120	KI-0121	KI-19
LIGHT TRUCK				KI-0051	KI-0052	KI-08
LIGHT TRUCK				KI-0053	KI-0054	KI-08
MAGENTIS(07-10) 2.4/2.7L	2831 +	67507	253103K080 +	HY-0079	HY-0080	HY-13
MENTOR(93-97) 1.5L		63390	OK20115200B	KI-0011		KI-02
MENTOR(96-01) 1.6L		66604	0K2A115200 +	KI-0007		KI-02
MORNING(11-15) 1.2L		66746 +	253101Y000 +	KI-0122	KI-0123	KI-19
OPTIMA(07-10) 2.4/2.7L	2831 +	67507	253103K080 +	HY-0079	HY-0080	HY-13
OPTIMA(11-14) 2.4L	13249		253104R000	HY-0150	HY-0151	HY-24
OPTIMA(11-15) 2.0L	13189		253103Q600	HY-0145	HY-0146	HY-23
OPTIMA(11-15) 2.0L	13189		253103Q600	HY-0145-1	HY-0146	HY-23
OPTIMA(12-14) 2.4L	13191 +		253101U250	HY-0119	HY-0120	HY-19
OPTIMA(12-14) 2.4L				HY-0119-1	HY-0120	HY-19
PICANTO(04-07) 1.0/1.1L		66654 +	2531007000 +	KI-0041	KI-0042	KI-07
PICANTO(07-14) 1.1L		66760	2531007500 +	KI-0043	KI-0044	KI-07
PICANTO(11-15) 1.2L		66746 +	253101Y000 +	KI-0122	KI-0123	KI-19
PICK UP(09-)				KI-0062	KI-0063	KI-10
PREGIO(95-04) 2.5L		66612 +	72B15200 +	KI-0021	KI-0022	KI-04
PREGIO(97-02) 2.7L				KI-0047		KI-07
PREGIO(97-02) 2.7L		66645 +	OK60B15200 +	KI-0017	KI-0018	KI-03
PREGIO(97-02) 2.7L				KI-0017	KI-0019	KI-03
PREGIO(97-02) 2.7L				KI-0020	KI-0018	KI-04
PREGIO(97-02) 2.7L				KI-0118	KI-0119	KI-18
PREGIO(97-02) 2.7L				KI-0120	KI-0121	KI-19
PREGIO(97-02)2.7L				KI-0020	KI-0152	KI-23
PRIDE(90-01) 1.3L	315 +	66600	18015200 +	KI-0095	KI-0097	KI-15
PRIDE(90-04) 1.1L				KI-0095	KI-0098	KI-15
PRIDE(90-04) 1.1L		62505	B10215200 +	KI-0095	KI-0096	KI-15
PRIDE（93-）1.1/1.3L				KI-0136	KI-0137	KI-21
RIO(00-02) 1.3/1.5L		66625	0K31F15200 +	KI-0025	KI-0026	KI-04
RIO(00-02) 1.3/1.5L		66624	0K30A15200D	KI-0106	KI-0107	KI-17
RIO(01-02) 1.5L	2392		0K31A15200A +	KI-0023	KI-0024	KI-04
RIO(03-05) 1.3/1.5/1.6L	2701	66663 +	0K31F15200E +	KI-0027	KI-0028	KI-05
RIO(03-05)1.3/1.5/1.6L				KI-0165	KI-0166	KI-26
RIO(06-11) 1.6L	2820 +	66687	253101G150 +	KI-0089	KI-0090	KI-13
RIO(06-11) 1.6L	2820 +	66687	253101G150 +	KI-0089	KI-0090-1	KI-14
RIO（06-11）1.6L		66687		KI-0089	KI-0148	KI-23
RIO(12-16)1.6L				HY-0103	HY-0104	HY-16
RIO(12-16)1.6L	13252 +	66756 +	253101R000 +	HY-0101	HY-0102	HY-16
RONDO(07-12) 2.4/2.7L	2961 +	66685	253101D110 +	KI-0070	KI-0071	KI-11

Model	DPI	NISSENS	OEM	Hongyan		Page
SEDONA(99-06) 2.9L		66618 +	0K55215200A +	KI-0093	KI-0092	KI-14
SEDONA(99-06) 2.9L				KI-0094	KI-0092	KI-14
SEDONA(01-) 2.5L		66640 +	OK58815200A	KI-0091	KI-0092	KI-14
SEDONA(02-05) 3.5L	2442		0K52Y15200C +	KI-0039	KI-0040	KI-06
SEDONA（02-05）3.5L				KI-0134	KI-0135	KI-20
SEDONA（06-10）3.8L	2898		253104D900/1/2	KI-0132	KI-0133	KI-20
SEDONA（15-16）3.3L	13508		25310A9050	KI-0149	KI-0150	KI-23
SEPHIA(93-97) 1.5L		63390	OK20115200B	KI-0011		KI-02
SEPHIA(93-97)				KI-0169		KI-26
SEPHIA(93-97)				KI-0171		KI-26
SEPHIA(93-97)				KI-0171-1		KI-27
SEPHIA(95-97) 1.6/1.8L	2056		0K20115200AB +	KI-0005	KI-0006	KI-02
SEPHIA(96-01) 1.6L		66604	0K2A115200 +	KI-0007		KI-02
SEPHIA(98-01) 1.8L	2269 +		0K24215200A +	KI-0009	KI-0010	KI-02
SORENTO(02-) 2.5/3.5L				KI-0036	KI-0037	KI-06
SORENTO(02-) 2.5/3.5L		66658 +	253103E350 +	KI-0038	KI-0037	KI-06
SORENTO(03-06) 3.5L	2585	66659	253113E250 +	KI-0034	KI-0035	KI-06
SORENTO(07-09) 2.5L				KI-0076	KI-0077	KI-11
SORENTO(07-09) 3.3/3.8L	2962		253103E930	KI-0078	KI-0079	KI-12
SORENTO(07-09) 3.3/3.8L	2962		253103E930	KI-0078	KI-0079-1	KI-12
SORENTO(09-15) 2.4L		66693 +	253102P500 +	KI-0068	KI-0069	KI-10
SORENTO(11-13)2.4/3.5L				HY-0119-1	HY-0120	HY-19
SORENTO(11-13) 2.4/3.5L	13191 +		253101U250	HY-0119	HY-0120	HY-19
SORENTO(15-)				KI-0156	KI-0157	KI-24
SORENTO 2.2L				KI-0147	KI-0069	KI-22
SORENTO				KI-0124	KI-0125	KI-19
SORENTO				KI-0140	KI-0141	KI-21
SORENTO				KI-0142	KI-0141	KI-21
SORENTO				KI-0143	KI-0144	KI-22
SOUL(09-15) 1.6L		66742	253102K000	KI-0103	KI-0102	KI-16
SOUL(10-11) 1.6L	13135		253102K050	KI-0101	KI-0102	KI-16
SOUL(10-11) 2.0L	13134		253102K150	KI-0104	KI-0105	KI-16
SOUL(10-11) 2.0L	13134		253102K150	KI-0104-1	KI-0105	KI-16
SOUL(12-13)1.6/2.0L	13333	67555	253103X010 +	HY-0113	HY-0115	HY-18
SPECTRA(00-04)1.8L	2269 +		0K24215200A +	KI-0009	KI-0010	KI-02
SPECTRA(04-09) 2.0L	2784		253102F020 +	KI-0055	KI-0056	KI-08
SPECTRA(04-09) 2.0L				KI-0057	KI-0056	KI-09
SPECTRA(04-09) 2.0L				KI-0058	KI-0056	KI-09
SPORTAGE(95-01) 2.0L	2057	66642 +	0K01115200A +	KI-0013	KI-0014	KI-03
SPORTAGE(02-) 2.0L	2561		0K03815200 +	KI-0045	KI-0046	KI-07
SPORTAGE(04-06) 2.0L		67486	253102E500 +	HY-0047	HY-0048	HY-08
SPORTAGE(04-10) 2.0L		67479	253102E100 +	HY-0049	HY-0050	HY-08
SPORTAGE(05-10) 2.7L	2785 +		253102E800 +	HY-0043	HY-0044	HY-08
SPORTAGE(05-10) 2.7L			253102E800 +	HY-0045	HY-0046	HY-08
SPORTAGE(11-15）2.4L	13150	67514 +	253102S550 +	HY-0117	HY-0118	HY-18
KIA				KI-0015		KI-03
KIA				KI-0080	KI-0081	KI-12
KIA				KI-0080	KI-0082	KI-12
KIA				KI-0083	KI-0084	KI-13
KIA				KI-0085	KI-0086	KI-13
KIA				KI-0087	KI-0088	KI-13

Model	DPI	NISSENS	OEM	Hongyan		Page
KIA				KI-0108	KI-0109	KI-17
KIA				KI-0108	KI-0110	KI-17
KIA				KI-0130	KI-0131	KI-20
KIA				KI-0068	KI-0069-1	KI-22
KIA				KI-0154	KI-0155	KI-24
INFINITI						
FX35(03-08) 3.5L	2683		21460CG000	NI-0067	NI-0068	NI-25
FX35(09-11) 3.5L	13078 +		214601CB0A +	NI-0177	NI-0178	NI-51
FX45(03-05) 4.5	2671		21460CG200	NI-0069	NI-0068	NI-25
FX50(09-11) 5.0L	13078 +		214601CB0A +	NI-0177	NI-0178	NI-51
G20(91-96) 2.0L	1158		2141053J00 +	NI-0005	NI-0006	NI-2
G20(91-96) 2.0L	1421 +			NI-0005	NI-0008	NI-3
G20(91-96) 2.0L	1421 +			NI-0005	NI-0008-1	NI-3
G20(99-02) 2.0L	2413			NI-0112	NI-0091	NI-39
G35(03-08) 3.5L	2588		21460AM900	NI-0065	NI-0066	NI-25
G35(03-05) 3.5L	2455		21460AL600 +	NI-0070	NI-0071	NI-25
G35(03-05) 3.5L	2455		21460AL600 +	NI-0070	NI-0071-1	NI-26
I30(96-99) 3.0L	1752 +			NI-0102	NI-0100	NI-35
I30(02-04) 3.0L	2329 +		2146002Y000 +	NI-0099	NI-0101	NI-34
J30(93-97) 3.0L	1561		214600P001 +	NI-0045	NI-0046	NI-18
J30(93-97) 3.0L				NI-0045	NI-0046-1	NI-18
J30(93-97) 3.0L				NI-0045	NI-0046-1	NI-18
JX35(13-) 3.5L	13348			NI-0388	NI-0389	NI-84
M35(06-10) 3.5L	2780			NI-0210	NI-0211	NI-56
M37（11-13）3.7L	13284		214601MA0A	NI-0308	NI-0309	NI-71
M45(03-04) 4.5L	2426		21460AR000	NI-0039	NI-0040	NI-16
M45(06-10) 4.5L	13012			NI-0212	NI-0211	NI-56
M45	2426		21460AR000	NI-0338	NI-0339	NI-76
M45			21460AR000	NI-0338	NI-0340	NI-76
Q45 (94-96) 4.5L	2053			NI-0198	NI-0199	NI-53
Q45(02-06) 4.5L	2426		21460AR000	NI-0039	NI-0040	NI-16
Q45（94-96）4.5L	2053			NI-0341	NI-0342	NI-77
Q45	2426		21460AR000	NI-0338	NI-0339	NI-76
Q45			21460AR000	NI-0338	NI-0340	NI-76
QX60(14-16)2.5/3.5L	13348			NI-0388	NI-0389	NI-84
Q70(14-15）3.7L	13284		214601MA0A	NI-0308	NI-0309	NI-71
QX4(97-00) 3.3L	2075 +			NI-0027	NI-0032	NI-13
QX4(97-00) 3.3L				NI-0027	NI-0032-1	NI-13
QX4(97-00) 3.3L				NI-0027	NI-0032-2	NI-13
QX4(97-00) 3.3L				NI-0027	NI-0032-3	NI-13
QX4(97-00) 3.3L	2075		21460VG100 +	NI-0035	NI-0034	NI-15
QX4(97-00) 3.3L				NI-0035	NI-0034-1	NI-15
QX4(01-03) 3.5L	2459 +		21460AG910 +	NI-0027	NI-0031	NI-12
QX4(01-03) 3.5L			21460AG300 +	NI-0027	NI-0031-1	NI-12
QX56(04-10) 5.6L	2691		214607S000	NI-0075	NI-0076	NI-27
RX56 (10-)				NI-0179	NI-0180	NI-51
INFINITI				NI-0362	NI-0363	NI-80
ISUZU						
AMIGO(89-93) 2.3L				IS-0004	IS-0005	IS-1

Model	DPI	NISSENS	OEM	Hongyan		Page
AMIGO(89-93) 2.3L	1127 +		8943376981 +	IS-0006	IS-0007	IS-1
AMIGO(89-93) 2.3L				IS-0006	IS-0008	IS-2
AMIGO(98-00) 2.2L	2194 +		8524788120 +	IS-0014	IS-0016	IS-3
AMIGO(98-00) 3.2L	2621 +		8524781100 +	IS-0014	IS-0015	IS-3
AMIGO(02-)				IS-0017		IS-3
AMIGO(02-)				IS-0019		IS-3
AXIOM(98-04)				IS-0100	IS-0101	IS-17
D-MAX(07-10) 3.0L		60856	8973333500 +	IS-0024	IS-0025	IS-4
D-MAX(07-10) 3.0L				IS-0026	IS-0025	IS-4
D-MAX(07-10)3.0L				IS-0106	IS-0107	IS-17
D-MAX(11-14)				IS-0027	IS-0028	IS-5
D-MAX(15-)				IS-0097	IS-0098	IS-16
D-MAX(15-)				IS-0097	IS-0099	IS-16
ELF(99-)				IS-0041	IS-0042	IS-7
ELF(99-)				IS-0043	IS-0044	IS-7
ELF(99-)				IS-0045	IS-0042	IS-7
ELF(99-)				IS-0046	IS-0042	IS-8
ELF(99-)				IS-0047	IS-0044	IS-8
ELF(99-)				IS-0048	IS-0044	IS-8
ELF(99-)				IS-0049	IS-0044	IS-8
ELF(99-)				IS-0050	IS-0044	IS-9
ELF(99-)				IS-0051	IS-0052	IS-9
ELF				IS-0056	IS-0057	IS-10
ELF				IS-0058	IS-0057	IS-10
ELF				IS-0059	IS-0060	IS-10
ELF				IS-0061	IS-0060	IS-10
ELF				IS-0065	IS-0066	IS-11
ELF				IS-0067	IS-0066	IS-11
ELF				IS-0089	IS-0066	IS-14
ELF			8972403132	IS-0091	IS-0044	IS-15
ELF				IS-0092	IS-0093	IS-15
ELF				IS-0094	IS-0095	IS-15
ELF				IS-0096	IS-0093	IS-16
ELF				IS-0096	IS-0095	IS-16
GIGA MAX(00-)				IS-0068	IS-0069	IS-12
GIGA MAX(00-)				IS-0070	IS-0071	IS-12
GIGA MAX(00-)				IS-0072		IS-12
GIGA MAX(00-)				IS-0074		IS-12
GIGA MAX(00-)				IS-0076		IS-13
GXZ GIGA			1214109323	IS-0104	IS-0105	IS-17
IMPULSE(91-92) 1.6L	1117 +		8943168493 +	IS-0037	IS-0038	IS-6
IMPULSE(92-)1.8L	1300			IS-0110		IS-18
KB250(89-98)				IS-0001	IS-0002	IS-1
KB280(89-98)				IS-0003	IS-0002	IS-1
NHR				IS-0053	IS-0054	IS-9
NHR				IS-0055	IS-0054	IS-9
NPR(09-)				IS-0062	IS-0063	IS-11
NPR(09-)				IS-0064	IS-0063	IS-11
NPR(09-)				IS-0090	IS-0063	IS-15
NPR				IS-0034	IS-0035	IS-6
NPR				IS-0036	IS-0035	IS-6

Model	DPI	NISSENS	OEM	Hongyan		Page
PICKUP(89-93) 2.3L				IS-0004	IS-0005	IS-1
PICKUP(89-93) 2.3L	1127 +		8943376981 +	IS-0006	IS-0007	IS-1
PICKUP(89-93) 2.3L				IS-0006	IS-0008	IS-2
PICK UP(90-92) 2.6L	1446		949384433	HO-0059	HO-0060	HO-10
RODEO(98-00) 2.2L	2194 +		8524788120 +	IS-0014	IS-0016	IS-3
RODEO(98-04) 3.2/3.5L	2621 +		8524781100 +	IS-0014	IS-0015	IS-3
RODEO(06-) 3.6L				IS-0039	IS-0040	IS-7
RODEO(07-10) 3.0L		60856	8973333500 +	IS-0024	IS-0025	IS-4
RODEO(07-10) 3.0L				IS-0026	IS-0025	IS-4
RODEO(07-10)3.0L				IS-0106	IS-0107	IS-17
RODEO(11-14)				IS-0027	IS-0028	IS-5
TFR				IS-0021	IS-0022	IS-4
TFR				IS-0023	IS-0022	IS-4
TROOPER(86-91) 2.3/2.8L	1127 +		8943376981 +	IS-0006	IS-0007	IS-1
TROOPER(92-02) 3.2/3.5L	1302 +		8943752765 +	IS-0011	IS-0012	IS-2
TROOPER(92-02) 3.2/3.5L				IS-0013	IS-0012	IS-2
TROOPER(98-02) 3.2L	2357 +	60852	8943752755/6	IS-0009	IS-0010	IS-2
STYLUS(91-93) 1.6L	1117 +		8943168493 +	IS-0037	IS-0038	IS-6
STYLUS(92-)1.8L	1300			IS-0110		IS-18
ISUZU				IS-0030	IS-0031	IS-5
ISUZU				IS-0032	IS-0031	IS-5
ISUZU				IS-0030	IS-0033	IS-6
ISUZU				IS-0078	IS-0079	IS-13
ISUZU				IS-0080	IS-0081	IS-13
ISUZU				IS-0082	IS-0083	IS-13
ISUZU				IS-0084	IS-0085	IS-14
ISUZU				IS-0086	IS-0087	IS-14
ISUZU				IS-0086	IS-0088	IS-14
ISUZU				IS-0102	IS-0103	IS-17
ISUZU				IS-0108		IS-18
IVECO						
DAILY(96-)		61975	93818439 +	IV-0005	IV-0006	IV-1
DAILY(96-)				IV-0005	IV-0007	IV-1
DAILY(96-)				IV-0008	IV-0009	IV-2
DAILY(96-)				IV-0008	IV-0010	IV-2
DAILY(99-)		61985	500303392 +	IV-0001	IV-0002	IV-1
DAILY(99-)		61981	504045489 +	IV-0003	IV-0004	IV-1
DAILY(99-)				IV-0015	IV-0016	IV-3
DAILY(99-)				IV-0017	IV-0018	IV-3
EUROCARGO(01-)		61967	504289350	IV-0019	IV-0020	IV-3
IVECO				IV-0011	IV-0012	IV-2
IVECO				IV-0013	IV-0014	IV-2
IVECO				IV-0021	IV-0022	IV-3
JAGUAR						
S-TYPE(00-08) 3.0L	13148	66708	C2C1448 +	JA-0003	JA-0004	JA-1
S-TYPE(00-09) 3.0/4.0/4.2L	2256		XR8002935	FO-0037	FO-0038	FO-6
F-PACE XFL/XE				JA-0011	JA-0012	JA-2
SUPER V8(00-09) 3.0/4.0/4.2L	2256		XR8002935	FO-0037	FO-0038	FO-6
VANDEN PLAS(04-09) 3.0L	13148	66708	C2C1448 +	JA-0003	JA-0004	JA-1

Model	DPI	NISSENS	OEM	Hongyan		Page
XE				JA-0009	JA-0010	JA-2
XE				JA-0011	JA-0012	JA-2
XF(08-15) 3.0L	13148	66708	C2C1448 +	JA-0003	JA-0004	JA-1
XE				JA-0009	JA-0010	JA-2
XFL				JA-0011	JA-0012	JA-2
XK8(98-07) 4.0L	2567	66701	MJB4190AD +	JA-0001	JA-0002	JA-1
XJ6(03-15) 3.0L	13148	66708	C2C1448 +	JA-0003	JA-0004	JA-1
JAGUAR 3.0L				JA-0007	JA-0008	JA-2
JEEP						
CHEROKEE(84-93) 2.5/2.8L	871		52003254/5 +	CH-0113	CH-0114	CH-17
CHEROKEE(84-93) 2.5/2.8L	77			CH-0113	CH-0115	CH-17
CHEROKEE(84-93)2.1/2.5/2.8L	77 +			CH-0171	CH-0172	CH-25
CHEROKEE(87-90) 4.0L	78 +		8952002094 +	CH-0008	CH-0009	CH-2
CHEROKEE(91-01) 4.0L	2340 +		52028133 +	CH-0005	CH-0006	CH-1
CHEROKEE(91-01) 4.0L			52028133 +	CH-0005-1	CH-0006-1	CH-1
CHEROKEE(91-01) 4.0L			52028133 +	CH-0007	CH-0006-1	CH-2
CHEROKEE(93-97) 4.0L	1395 +	609891	52005166/72 +	CH-0003	CH-0004	CH-1
CHEROKEE(93-97) 5.2L	1394 +	609901	52006644 +	CH-0001	CH-0002	CH-1
CHEROKEE(14-15)2.4/3.2L	13400 +		68229284AA	CH-0136	CH-0137	CH-20
COMMANDER(06-07) 3.7/4.7/5.7L	2839 +		55116849AB +	CH-0035	CH-0036	CH-6
GRAND CHEROKEE(93-97)4.0L	2231 +			CH-0167	CH-0168	CH-25
GRAND CHEROKEE(93-97)5.2L	2230			CH-0169	CH-0170	CH-25
GRAND CHEROKEE(99-00) 4.7L	2263	61010	52079425 +	CH-0031	CH-0032	CH-5
GRAND CHEROKEE(99-04) 4.0L	2262	61009	52079428 +	CH-0029	CH-0030	CH-5
GRAND CHEROKEE(01-04) 4.7L	2336	61023	5207983AB	CH-0033	CH-0034	CH-5
GRAND CHEROKEE(05-10) 4.7L	2839 +		55116849AB +	CH-0035	CH-0036	CH-6
GRAND CHEROKEE（07-10）	13181	61022	55116858AA	CH-0035	CH-0149	CH-22
GRAND CHEROKEE(11-14) 5.7L	13200	61033	55038001AG	CH-0081	CH-0082	CH-12
LIBERTY(02-05) 2.4L	2482		52080123AA +	CH-0059	CH-0060	CH-9
LIBERTY(02-06) 3.7L	2481	61017	52080118AB	CH-0061	CH-0062	CH-10
LIBERTY(02-06) 3.7L				CH-0063	CH-0062	CH-10
LIBERTY(02-06) 3.7L				CH-0065	CH-0066	CH-10
LIBERTY(07) 3.7L	2975		68020278AA	CH-0063	CH-0064	CH-10
LIBERTY(08-13) 3.7L	13071	61035	68033227AA	CH-0067	CH-0068	CH-11
TJ(97-04) 4.0L	2101	60993	52028120 +	CH-0073	CH-0074	CH-11
WRANGLER(84-87) 2.5/2.8L	871		52003254/5 +	CH-0113	CH-0114	CH-17
WRANGLER(84-87) 2.5/2.8L	77			CH-0113	CH-0115	CH-17
WRANGLER(-87-95) 2.5/4.0/4.2L	1015 +		52004781 +	CH-0111	CH-0112	CH-17
JEEP WRANGLER(87-95)2.5/4.0/4.2L	1015			CH-0173	CH-0174	CH-25
WRANGLER(97-06) 2.4/2.5/4.0L	2101	60993	52028120 +	CH-0073	CH-0074	CH-11
WRANGLER(07-14) 3.6/3.8L	2957		55056633AB	CH-0075	CH-0076	CH-12
JEEP WRANGLER（07-14）3.6/3.8L			55056633AB	CH-0142	CH-0143	CH-21
LADA						
LARGUS(12-) 1.2/1.4/1.6L		637609	8200735038	RE-0081	RE-0082	RE-12
LARGUS(12-15) 1.4L		637612	8200735039	RE-0075	RE-0076	RE-11
LARGUS(12-15) 1.4L		637613	214100598R +	RE-0077	RE-0078	RE-11
LADA				LA-0001	LA-0002	LA-1
LADA				LA-0003	LA-0004	LA-1
LADA				LA-0005	LA-0006	LA-1

Model	DPI	NISSENS	OEM	Hongyan		Page
LADA				LA-0007	LA-0008	LA-1
LADA				LA-0009	LA-0010	LA-2
LADA				LA-0011	LA-0012	LA-2
LADA				LA-0013	LA-0014	LA-2
LADA				LA-0015	LA-0016	LA-2
LADA				LA-0015	LA-0017	LA-3
LADA				LA-0018	LA-0019	LA-3
LADA				LA-0020	LA-0021	LA-3
LADA				LA-0022	LA-0023	LA-3
LADA				LA-0024	LA-0025	LA-4
LADA				LA-0026	LA-0027	LA-4
LAND ROVER						
DEFENDER(98-04) 2.5L		64312A	PCC001070 +	RO-0009	RO-0010	RO-2
DEFENDER(98-15) 2.5L		64311A	PCC001020	RO-0007	RO-0008	RO-1
DISCOVERY(00-04) 4.0L	2930	64313A	PCC000710	RO-0020	RO-0021	RO-3
DISCOVERY(04-14) 2.7L		64321A	PCC500111 +	RO-0013	RO-0014	RO-2
DISCOVERY(09-15) 3.0L		64332	LR015561	RO-0022	RO-0023	RO-3
FREELANDER(98-06) 1.8L		64301A	PCC000110 +	RO-0017	RO-0018	RO-3
FREELANDER(98-06) 2.0L		64300A	PCC000100 +	RO-0019	RO-0018	RO-3
FREELANDER(98-06) 2.5L	2870	64310A	PCC000320 +	RO-0011	RO-0012	RO-2
FREELANGER(06-15) 2.0L		65615A	1377541 +	FO-0137	FO-0138	FO-22
FREELANGER(06-15) 2.0L		66857	1377542 +	FO-0137-1	FO-0138-1	FO-23
LR2(06-12) 2.0L		65615A	1377541 +	FO-0137	FO-0138	FO-22
LR2(06-12) 2.0L		66857	1377542 +	FO-0137-1	FO-0138-1	FO-23
LR3(04-09)4.0/4.4L		64320A	PCC500040/1 +	RO-0024	RO-0025	RO-4
LR4(12-15) 3.0L		64332	LR015561	RO-0022	RO-0023	RO-3
RANGE ROVER(93-02) 2.5L		64309		RO-0005	RO-0006	RO-1
RANGE ROVER(93-02) 3.9/4.2L		64302A	ERS2269 +	RO-0001	RO-0002	RO-1
RANGE ROVER(93-02) 3.9/4.2L				RO-0003	RO-0004	RO-1
RANGE ROVER(06-12) 3.6L		643222		RO-0015	RO-0016	RO-2
SPORT(10-13)3.0L				RO-0034	RO-0035	RO-5
SPORT(06-09)4.2/4.4L		64320A	PCC500040/1 +	RO-0024	RO-0025	RO-4
LAND ROVER(14-)				RO-0028	RO-0029	RO-4
LAND ROVER				RO-0026	RO-0027	RO-4
LAND ROVER				RO-0030	RO-0031	RO-4
LAND ROVER				RO-0032	RO-0033	RO-5
LEXUS						
CT200H(11-13) 1.8L	13119		1640037230	TO-0412	TO-0413	TO-71
CT200H(11-)				TO-0614	TO-0615	TO-101
ES250(90-91)2.5L	21			TO-0815	TO-0816	TO-137
ES300(92-93) 3.0L				TO-0025	TO-0026	TO-6
ES300(92-93) 3.0L	1303		1640062100 +	TO-0027	TO-0026	TO-6
ES300(94-96) 3.0L	1746		1640020040 +	TO-0049	TO-0050	TO-11
ES300(95-99)	1746		1640020050	TO-0756	TO-0050	TO-126
ES300(97-01) 3.0L	1910 +	647541	164000A200 +	TO-0054	TO-0055	TO-12
ES300(97-01) 3.0L				TO-0054	TO-0056	TO-12
ES330(04-06) 3.3L	2434 +		164002270 +	TO-0126	TO-0127	TO-25
ES350(07-12) 3.5L	2817 +		1640031520 +	TO-0130	TO-0131	TO-26
ES350(07-12) 3.5L	13035		1640031520	TO-0132	TO-0131	TO-26

Model	DPI	NISSENS	OEM	Hongyan		Page
GS300(93-97) 3.0L	1854		1640046270 +	TO-0219	TO-0220	TO-42
GS300(98-05) 3.0L	2222		1640046570	TO-0221	TO-0222	TO-42
GS300(99-)			1640046180	TO-0223	TO-0220	TO-42
GS300(99-)			1640046590	TO-0224	TO-0222	TO-42
GS300(06-11)			1640046361 +	TO-0081	TO-0082	TO-17
GS350(06-11)			1640046361 +	TO-0081	TO-0082	TO-17
GS350(07-11) 3.5L	2782		1640031370	TO-0104	TO-0105	TO-21
GS430(01-05)4.3L	2541			TO-0804	TO-0222	TO-135
GS430(01-05)4.3L	2575			TO-0805	TO-0222	TO-135
GS430(06-07) 4.3L	2781		1640050320	TO-0478	TO-0479	TO-81
GS430(06-07) 4.3L			1640050330	TO-0480	TO-0344	TO-81
GS450H(13-)				TO-0626	TO-0627	TO-103
GS450H(13-)	13340			TO-0628	TO-0627	TO-103
GS460(08-11) 4.6L	13096		1640038220	TO-0561	TO-0562	TO-94
GX(96-98)			1640046361 +	TO-0081	TO-0082	TO-17
GX460(09-)				TO-0325	TO-0326	TO-59
GX470(03-09) 4.7L	2581		1640050300	TO-0320	TO-0321	TO-58
GX470(03-09) 4.7L				TO-0322	TO-0321	TO-58
IS300(02-05) 3.0L	2356		1640046730	TO-0085	TO-0086	TO-18
IS300(02-05) 3.0L			1640046730	TO-0085	TO-0086-1	TO-18
IS300(02-05) 3.0L			1640046730	TO-0085	TO-0086-2	TO-18
LS400(90-94) 4.0L	1304		1640050020 +	TO-0057	TO-0058	TO-13
LS400(95-98) 4.0L				TO-0051	TO-0052	TO-12
LS400(95-00) 4.0L	2058		1640050130	TO-0053	TO-0052	TO-12
LS430(01-06) 4.3L	2419 +		1640050250 +	TO-0242	TO-0243	TO-45
LS460(07-14) 4.6L	13037		1640038240	TO-0343	TO-0344	TO-62
LS460(09-14) 4.6L	13018		1640038170	TO-0481	TO-0479	TO-81
LX450(96-97) 4.5L	1917		1640066050	TO-0012	TO-0014	TO-3
LX450(96-97) 4.5L	1918		1640066080 +	TO-0023	TO-0024	TO-6
LX470(98-02) 4.7L	2282		1640050210	TO-0016	TO-0018	TO-4
LX470(98-02) 4.7L			1640050210	TO-0016	TO-0018-1	TO-4
LX570(08-14) 5.7L	13080	646827	1640050380	TO-0371	TO-0372	TO-66
LX570(08-14) 5.7L				TO-0373	TO-0374	TO-66
LX570(08-14) 5.7L				TO-0498	TO-0372	TO-84
RH450H(10-11)				TO-0677	TO-0678	TO-110
RX270(12-) 2.7L				TO-0559	TO-0560	TO-94
RX 300/330				TO-0367	TO-0368	TO-65
RX350(07-09) 3.5L	13019		164000P180 +	TO-0591	TO-0592	TO-98
RX400H(06-08) 3.3L			1604120351 +	TO-0362	TO-0363	TO-65
RX400H(06-08) 3.3L	2929		1604120351 +	TO-0364	TO-0363	TO-65
SC400(92-00)	1306 +			TO-0608	TO-0609	TO-100
SC430(02-10) 4.3L	2575 +		1640050280	TO-0245	TO-0222	TO-46
LEXUS(90-94)			1640050020	TO-0702	TO-0703	TO-118
LINCOLN						
AVIATOR(03-05) 4.6L	2603			FO-0196	FO-0197	FO-31
CONTINENTAL(88-94) 3.8L	1094 +	62065	E6DA8005EC +	FO-0031	FO-0032	FO-5
CONTINENTAL(88-94) 3.8L				FO-0047	FO-0048	FO-8
CONTINENTAL(95-02) 4.6L	1729		F50H8005BA +	FO-0149	FO-0150	FO-24
LS(00-06) 3.0/3.9L	2256		XR8002935	FO-0037	FO-0038	FO-6

Model	DPI	NISSENS	OEM	Hongyan		Page
MARK VIII(93-98) 4.6L	1551			FO-0159	FO-0158	FO-26
MKS(07-12) 3.5/3.7L	2937		7T4Z8005A/B	FO-0115	FO-0116	FO-18
MKT(07-12) 3.5/3.7L	2937		7T4Z8005A/B	FO-0115	FO-0116	FO-18
MKT(10-12) 3.5/3.7L	13185			FO-0250	FO-0251	FO-39
MKT(10-12) 3.5/3.7L	13185			FO-0321	FO-0322	FO-50
MKT(10-12)3.5/3.7L	13185			FO-0250	FO-0323	FO-50
MKX(07-12) 3.5/3.7L	2937		7T4Z8005A/B	FO-0115	FO-0116	FO-18
MKZ(13-15) 2.0/2.5L	13321			FO-0237	FO-0238	FO-38
NAVIGATOR(03-06) 5.4L	2719			FO-0098-2	FO-0187	FO-30
NAVIGATOR(07-08) 5.4L	13045		9L3Z8005A +	FO-0129	FO-0130	FO-21
NAVIGATOR(09-14 5.4L	13099		9L3Z8005A	FO-0131	FO-0130-1	FO-21
NAVIGATOR(15-17)3.5L	13227 +			FO-0306	FO-0130-1	FO-47
TOWN CAR(86-90) 5.0L	227		FOVY8005A/B +	FO-0035	FO-0036	FO-6
TOWN CAR(86-90)5.0L	227		FOVY8005A/B +	FO-0035	FO-0336	FO-53
TOWN CAR(92-94) 4.6L	1279	62031A	F3AH8005AB +	FO-0029	FO-0030	FO-5
TOWN CAR(95-97) 4.6L	1737		F5VH8005AB +	FO-0027	FO-0028	FO-5
TOWN CAR(03-05) 4.6L	2610		3W1H8005AF/G	FO-0039	FO-0040	FO-7
TOWN CAR(03-05) 4.6L				FO-0039-1	FO-0040-1	FO-7
TOWN CAR(04-05) 4.6L	2157	62033	F8VZ8005BA +	FO-0025	FO-0026	FO-5
TOWN CAR(06-11) 4.6L	2852		6W1Z8005AA +	FO-0109	FO-0110	FO-18
ZEPHYR(06-) 3.0L	2856		6E5Z8005B	FO-0113	FO-0114	FO-18
MAZDA						
121(87-90) 1.1/1.3L		62505	BJ0115200 +	MA-0123	MA-0124	MA-18
121(98-99) 1.3/1.5L		62455A	B5C715200A +	MA-0065	MA-0066	MA-10
2(03-) 1.4L		62027A	1214784 +	FO-0088	FO-0089	FO-14
2(03-) 1.3/1.4/1.6L		62028A +		FO-0213	FO-0214	FO-34
2(04-)			ZJ0315200 +	MA-0148	MA-0149	MA-22
2(07-15) 1.3/1.5L		68504 +	ZJ3815200 +	MA-0097	MA-0098	MA-15
2(07-15) 1.3/1.5L		68538	ZJ3915200A	MA-0099	MA-0100	MA-15
2(11-15) 2.5L	13233		ZYE920015	MA-0097	MA-0139	MA-20
2（07-）1.3/1.5L				MA-0176	MA-0098	MA-26
2 DEMIO			P30115200	MA-0184	MA-0098	MA-27
323(85-90)		62512	E35815200	MA-0121	MA-0122	MA-18
323(86-89)				MA-0083	MA-0084	MA-13
323(86-89)	243 +	62504	E7GZ8005A	MA-0085	MA-0086	MA-13
323(86-89)	243 +		E7GZ8005A	MA-0085	MA-0087	MA-13
323(90-95) 1.3L				MA-0050	MA-0051	MA-8
323(90-95) 1.3L		624091		MA-0050	MA-0052	MA-8
323(90-95) 1.6/1.8L		62378	B55715200B +	MA-0075	MA-0076	MA-12
323(90-95) 1.6/1.8L	1135		0K20115200A +	MA-0077	MA-0076	MA-12
323(90-95) 1.6/1.8L	1134			MA-0078	MA-0076	MA-12
323(90-95) 1.6/1.8L				MA-0117	MA-0118	MA-17
323(96-99)				MA-0020	MA-0021	MA-4
323(96-99)				MA-0022	MA-0021	MA-4
323			E35815200B	MA-0164	MA-0165	MA-24
323				MA-0166	MA-0167	MA-24
323（90-94）				MA-0168	MA-0169	MA-25
323(98-)2.0L			RF1S15200A	MA-0207	MA-0206	MA-31
3(03-09) 1.4/1.6L		69256	1305492 +	MA-0069	MA-0070	MA-11

Model	DPI	NISSENS	OEM	Hongyan		Page
3(04-09) 2.0/2.3L	2696		L33X15200 +	MA-0067	MA-0068	MA-11
3(09-14) 1.6L		68522	Z6811520YA	MA-0115	MA-0116	MA-17
3(10-13) 2.0L		68521	LF8B1520Y +	MA-0127	MA-0128	MA-19
3(10-13) 2.0L	13100		LF8M1520YD	MA-0127	MA-0129	MA-19
3（14-15） 2.0/2.5L	13404		PE181520Y	MA-0158	MA-0159	MA-23
3（14-15）2.0/2.5L	13404		PE181520Y +	MA-0158	MA-0181	MA-27
5(06-10) 2.3L	2894	68503	LFB715200A	MA-0095	MA-0096	MA-15
5（12-15）2.5L	13220	68528	LFYA15SB0 +	MA-0172	MA-0173	MA-25
626(88-92) 2.2L	248		AL02152009 +	MA-0093	MA-0094	MA-14
626(93-97) 2.0L	1323 +	62392A +	FP5915200 +	MA-0042	MA-0043	MA-7
626(93-97) 2.0L	1324			MA-0044	MA-0045	MA-7
626(93-97) 2.5L	1326 +	62486A	92OW8005CF +	MA-0136	MA-0137	MA-20
626(93-97)2.5L	1325		F32Z8005C/D +	MA-0136	MA-0192	MA-28
626(98-00) 2.0L	2008		FSD15200 +	MA-0046		MA-8
626(98-00) 2.0L				MA-0048		MA-8
626(98-02) 2.5L	2010 +		KLG415200	MA-0138	MA-0137	MA-20
6(93-97_2.5L	1325		F32Z8005C/D +	MA-0136	MA-0192	MA-28
6（02-07）			LF2115200 +	MA-0182	MA-0183	MA-27
6(02-08) 2.3L		69466	L32115200C	MA-0025	MA-0026	MA-5
6(03-08) 2.3L	2673	62465A +	L32115200D +	MA-0027	MA-0026	MA-5
6(03-08) 2.3L				MA-0028	MA-0026	MA-5
6(03-08)2.3L				MA-0208	MA-0026	MA-31
6(03-08) 3.0L	2672		AJ5715200E +	MA-0029	MA-0030	MA-5
6(07-13) 1.8L		68507 +	LF4J15200 +	MA-0033	MA-0034	MA-6
6(07-13) 1.8L				MA-0033	MA-0035	MA-6
6(09-10) 2.5/3.7L	13089		CA0715200A	MA-0130	MA-0131	MA-19
6(09-10)2.5/3.7L	13089+		CA0715200A	FO-0267	FO-0114	FO-42
6(10-13) 2.5L	13389		L5A415200A	MA-0152	MA-0153	MA-22
6(14-15) 2.5L	13367	68539		MA-0111	MA-0112	MA-17
6(11-13)2.5L				MA-0203	MA-0204	MA-30
929(92-95) 3.0L	1307		JE48152000 +	MA-0011	MA-0012	MA-2
ATENZA(03-08) 2.3L	2673	62465A +	L32115200D +	MA-0027	MA-0026	MA-5
ATENZA(03-08)2.3L				MA-0208	MA-0026	MA-31
AXELA(04-09) 1.4/1.6L		69256	1305492 +	MA-0069	MA-0070	MA-11
B2300(95-97) 2.3L	1726			FO-0173	FO-0174	FO-28
B2300(98-01) 2.5L	2172		F87Z8005GA	FO-0005	FO-0006	FO-1
B2300(01-10) 2.3L	2470	69229	4219903 +	FO-0003-1	FO-0004	FO-1
B2300(04-) 2.3L	1062			FO-0188	FO-0189	FO-30
B2500(99-05) 2.5L				MA-0001	MA-0002	MA-1
B2500(99-05) 2.5L				MA-0001	MA-0003	MA-1
B2500(99-05) 2.5L		62246A	1378035 +	MA-0001	MA-0004	MA-1
B2500(99-05) 2.5L				MA-0006	MA-0007	MA-2
B2500(99-05) 2.5L				MA-0008	MA-0009	MA-2
B2500(99-05) 2.5L				MA-0008	MA-0010	MA-2
B2600(89-93) 2.6L	1424 +		G60715200A +	MA-0015	MA-0014	MA-3
B3000(95-97) 3.0L	1722			FO-0198	FO-0200	FO-32
B4000(95-97) 4.0L	1722			FO-0198	FO-0200	FO-32
BANTAM(96-02)				MA-0088	MA-0089	MA-14
BANTAM(96-02)				MA-0088	MA-0090	MA-14
BONGO(95-01)				MA-0140	MA-0141	MA-21
BONGO(95-01)				MA-0140	MA-0141-1	MA-21

Model	DPI	NISSENS	OEM	Hongyan		Page
BONGO(95-02）				MA-0161	MA-0162	MA-24
BONGO(95-02）				MA-0161	MA-0163	MA-24
BONGO(96-99)				MA-0020	MA-0021	MA-4
BONGO(96-99)				MA-0022	MA-0021	MA-4
BONGO(96-99)			25215I00B	MA-0079	MA-0080	MA-12
BONGO(96-99）			B5D915200B +	MA-0195	MA-0196	MA-29
BONGO(96-99）			F81F15200A	MA-0198	MA-0199	MA-29
BONGO(97-99)				MA-0142	MA-0143	MA-21
BONGO(97-99)				MA-0144	MA-0145	MA-21
BOUNTY(99-07)				MA-0001	MA-0002	MA-1
BOUNTY(99-07)				MA-0001	MA-0003	MA-1
BOUNTY(99-07)		62246A	1378035 +	MA-0001	MA-0004	MA-1
BOUNTY(99-07)				MA-0006	MA-0007	MA-2
BOUNTY(99-07)				MA-0008	MA-0009	MA-2
BOUNTY(99-07)				MA-0008	MA-0010	MA-2
BT-50(06-11)				MA-0001	MA-0002	MA-1
BT-50(06-11)				MA-0001	MA-0003	MA-1
BT-50(06-11)		62246A	1378035 +	MA-0001	MA-0004	MA-1
BT-50(06-11)				MA-0006	MA-0007	MA-2
BT-50(06-11)				MA-0008	MA-0009	MA-2
BT-50(06-11)				MA-0008	MA-0010	MA-2
BT-50(11-15) 2.2L		69245	1726085 +	FO-0135	FO-0136-1	FO-22
BT-50(11-15) 2.2L				FO-0135	FO-0136	FO-22
CX3				MA-0189	MA-0190	MA-28
CX3				MA-0189	MA-0191	MA-28
CX-5(13-15) 2.0L	13317	68534	PE0115200A	MA-0107	MA-0108	MA-16
CX-5(13-15) 2.0L		68532	SH0115200A	MA-0109	MA-0110	MA-16
CX-7(07-12) 2.3L	2918	68524	L33L15200	MA-0031	MA-0032	MA-6
CX-9(07-15) 3.7L	2986 +	68525	CY0315200F	MA-0105	MA-0106	MA-16
DEMIO(04-)			ZJ0315200 +	MA-0148	MA-0149	MA-22
DEMIO(98-99) 1.3/1.5L		62455A	B5C715200A +	MA-0065	MA-0066	MA-10
DEMIO(98-）				MA-0200	MA-0201	MA-30
DEMIO(07-15) 1.3/1.5L		68504 +	ZJ3815200 +	MA-0097	MA-0098	MA-15
DEMIO(07-15) 1.3/1.5L		68538	ZJ3915200A	MA-0099	MA-0100	MA-15
DRIFTER(96-07)				MA-0001	MA-0002	MA-1
DRIFTER(96-07)				MA-0001	MA-0003	MA-1
DRIFTER(96-07)		62246A	1378035 +	MA-0001	MA-0004	MA-1
DRIFTER(96-07)				MA-0006	MA-0007	MA-2
DRIFTER(96-07)				MA-0008	MA-0009	MA-2
DRIFTER(96-07)				MA-0008	MA-0010	MA-2
DRIFTER(03-)			WLVH15200	MA-0150	MA-0151	MA-22
E2000(87-)			R2LI15200A +	MA-0081	MA-0082	MA-13
E2200(97-03) 2.2L		67358	R2S215200B +	MA-0091	MA-0092	MA-14
E2200(88-96）			RF0115200E +	MA-0195	MA-0197	MA-29
FROCEED(96-07)				MA-0001	MA-0002	MA-1
FROCEED(96-07)				MA-0001	MA-0003	MA-1
FROCEED(96-07)		62246A	1378035 +	MA-0001	MA-0004	MA-1
FROCEED(96-07)				MA-0006	MA-0007	MA-2
FROCEED(96-07)				MA-0008	MA-0009	MA-2
FROCEED(96-07)				MA-0008	MA-0010	MA-2
METRO(96-11）			B5D915200BA	MA-0200	MA-0202	MA-30

Model	DPI	NISSENS	OEM	Hongyan		Page
MIATA(99-05) 1.8L	2268 +	62467	BP4W15200A +	MA-0023	MA-0024	MA-4
MILLENIA(95-02) 2.3/2.5L	2065		KL4715200A +	MA-0058	MA-0059	MA-9
MPV(89-98) 2.6/3.0L	1244 +		252187 +	MA-0013	MA-0014	MA-3
MPV(91-98)				MA-0016	MA-0017	MA-3
MPV(91-98)				MA-0016	MA-0019	MA-4
MPV(91-98)				MA-0018	MA-0017	MA-3
MPV(00-01) 2.5L	2330		GY0115200D +	MA-0053	MA-0054	MA-9
MPV(02-06) 3.0L	2456 +		AJ5115200B +	MA-0055	MA-0054	MA-9
MPV(02-06) 3.0L				MA-0056	MA-0057	MA-9
MX-3(92-94) 1.8L	1559		K80115200D +	MA-0146	MA-0147	MA-22
MX-5(90-97) 1.6/1.8L	1140	62447	B61P1520 +	MA-0119	MA-0120	MA-18
MX-5(99-05) 1.8L	2268 +	62467	BP4W15200A +	MA-0023	MA-0024	MA-4
MX-6(88-92) 2.2L	248		AL02152009 +	MA-0093	MA-0094	MA-14
MX-6(92-97) 2.0/2.2L	1323 +	62392A +	FP5915200 +	MA-0042	MA-0043	MA-7
MX-6(92-97) 2.0/2.2L	1324			MA-0044	MA-0045	MA-7
MX-6(93-97) 2.5L	1326 +	62486A	92OW8005CF +	MA-0136	MA-0137	MA-20
NAVAJO(91-94) 4.0L	897			FO-0175	FO-0176	FO-28
PICKUP				MA-0134	MA-0135	MA-20
PROTEGE(90-94) 1.3L				MA-0050	MA-0051	MA-8
PROTEGE(90-94) 1.3L		624091		MA-0050	MA-0052	MA-8
PROTEGE(90-94) 1.8L		62378	B55715200B +	MA-0075	MA-0076	MA-12
PROTEGE(90-94) 1.8L	1135		0K20115200A +	MA-0077	MA-0076	MA-12
PROTEGE(90-94) 1.8L	1134			MA-0078	MA-0076	MA-12
PROTÉGÉ(95-98) 1.5/1.8L	1704	62384	B68F15200G +	MA-0063	MA-0064	MA-10
PROTÉGÉ(99-03) 1.6/2.0L	2303		B35S15200C +	MA-0060	MA-0061	MA-10
PROTÉGÉ(99-03) 1.6/2.0L				MA-0060	MA-0062	MA-10
PROTÉGÉ(99-03)1.6/2.0L	2303			MA-0205	MA-0206	MA-30
RX-8(04-08) 1.3L	2694 +	62458	N3H415200C +	MA-0101	MA-0102	MA-15
TRIBUTE(01-06) 2.0L	2306		4L8Z8005JA +	MA-0073	MA-0074	MA-11
TRIBUTE(01-06) 3.0L	2307		4L8Z8005KA +	MA-0071	MA-0072	MA-11
TRIBUTE(08-) 2.3L	2762		5M6Z8005AC	FO-0107	FO-0108	FO-17
TRIBUTE(08-10) 2.3/2.5L	2763		5M6Z8005BE +	FO-0105	FO-0106	FO-17
TRIBUTE(09-10) 2.5L	13209		8L8Z18476A	FO-0107	FO-0252	FO-40
TRIBUTE(08-11) 3.0L	13041			FO-0205	FO-0206	FO-33
MAZDA				MA-0001	ME-0005	MA-1
MAZDA				MA-0038	MA-0039	MA-7
MAZDA				MA-0040		MA-7
MAZDA			B5C715200D +	MA-0103	MA-0104	MA-16
MAZDA				MA-0113	MA-0114	MA-17
MAZDA				MA-0125	MA-0126	MA-18
MAZDA				MA-0132	MA-0133	MA-19
MAZDA				MA-0154	MA-0155	MA-23
MAZDA				MA-0156	MA-0157	MA-23
MAZDA				MA-0170	MA-0171	MA-25
MAZDA				MA-0185	MA-0186	MA-27
MAZDA				MA-0193	MA-0194	MA-29
MAZDA				MA-0113	MA-0160	MA-23
MAZDA				MA-0177	MA-0178	MA-26
MAZDA				MA-0179	MA-0180	MA-26
MAZDA			P31H15201	MA-0154	MA-0155	MA-23
MAZDA			S55215200	MA-0156	MA-0157	MA-23

Model	DPI	NISSENS	OEM	Hongyan		Page
MAZDA				MA-0174	MA-0007	MA-25
MAZDA				MA-0175	MA-0010	MA-26
MERCEDES BENZ						
190(82-90)		62670A	2015004103 +	ME-0059	ME-0060	ME-8
190(82-90)		62670A	2015004103 +	ME-0059	ME-0061	ME-8
190(82-90)				ME-0059	ME-0062	ME-8
190(88-93)		62602	8MK376712321 +	ME-0083	ME-0084	ME-11
190D(83-93)		62670A	2015004103 +	ME-0059	ME-0060	ME-8
190D(83-93)		62670A	2015004103 +	ME-0059	ME-0061	ME-8
190D(83-93)				ME-0059	ME-0062	ME-8
190E(82-93)		62670A	2015004103 +	ME-0059	ME-0060	ME-8
190E(87-93) 2.6L	470	62582A	2015006403 +	ME-0134	ME-0135	ME-18
208D(95-)		62685A	9015002400	ME-0051	ME-0052	ME-7
208D(95-)	2796	62519A	9015003800 +	ME-0053	ME-0052	ME-7
210D(95-)		62685A	9015002400	ME-0051	ME-0052	ME-7
210D95-)	2796	62519A	9015003800 +	ME-0053	ME-0052	ME-7
212D(95-)		62685A	9015002400	ME-0051	ME-0052	ME-7
212D(95-)	2796	62519A	9015003800 +	ME-0053	ME-0052	ME-7
230(76-78) 2.3L	670	62710 +	1235011001 +	ME-0023	ME-0024	ME-4
230(88-91)				ME-0070	ME-0073	ME-10
240(76-83) 2.4L	670	62710 +	1235011001 +	ME-0023	ME-0024	ME-4
260(84-)		62711	1245001403 +	ME-0063	ME-0064	ME-8
280(84-)		62711	1245001403 +	ME-0063	ME-0064	ME-8
300(84-)		62711	1245001403 +	ME-0063	ME-0064	ME-8
280CE(77-81)	671		1235010701 +	ME-0132	ME-0133	ME-18
280E (77-81)	671		1235010701 +	ME-0132	ME-0133	ME-18
280SE(77-81)	671		1235010701 +	ME-0132	ME-0133	ME-18
300(81-85) 3.0L	473	62724	1265002303	ME-0142	ME-0143	ME-19
300CD(95-)				ME-0072	ME-0073	ME-10
300D(90-93) 2.5L	1310	62698A	1245004403 +	ME-0070	ME-0071	ME-9
300TD(95-)				ME-0072	ME-0073	ME-10
300SE(88-91) 3.0L	472 +	62682A	1265004103 +	ME-0067	ME-0068	ME-9
300SE(88-91) 3.0L				ME-0067	ME-0069	ME-9
300SEL(88-91) 3.0L	472 +	62682A	1265004103 +	ME-0067	ME-0068	ME-9
300SEL(88-91) 3.0L				ME-0067	ME-0069	ME-9
300(81-85） 3.0L	473	62724	1265002303	ME-0142	ME-0143	ME-19
308D(95-)		62685A	9015002400	ME-0051	ME-0052	ME-7
308D(95-)	2796	62519A	9015003800 +	ME-0053	ME-0052	ME-7
310D(95-)		62685A	9015002400	ME-0051	ME-0052	ME-7
310D(95-)	2796	62519A	9015003800 +	ME-0053	ME-0052	ME-7
312D(95-)		62685A	9015002400	ME-0051	ME-0052	ME-7
312D(95-)	2796	62519A	9015003800 +	ME-0053	ME-0052	ME-7
380S(82-85) 3.8L	438	62727A	1265001703	ME-0033	ME-0034	ME-5
380S(82-85) 3.8L	436		1075002103	ME-0039	ME-0040	ME-5
408D(95-)		62685A	9015002400	ME-0051	ME-0052	ME-7
408D(95-)	2796	62519A	9015003800 +	ME-0053	ME-0052	ME-7
410D(95-)		62685A	9015002400	ME-0051	ME-0052	ME-7
410D(95-)	2796	62519A	9015003800 +	ME-0053	ME-0052	ME-7
412D(95-)		62685A	9015002400	ME-0051	ME-0052	ME-7
412D(95-)	2796	62519A	9015003800 +	ME-0053	ME-0052	ME-7

Model	DPI	NISSENS	OEM	Hongyan		Page
420S(86-91) 4.2L	438	62727A	1265001703	ME-0033	ME-0034	ME-5
560S(86-91) 5.6L	438	62727A	1265001703	ME-0033	ME-0034	ME-5
A(11-)		67188	o995001303	ME-0101	ME-0102	ME-14
A140(97-04)		62546	1685001802	ME-0128	ME-0129	ME-17
A140(97-04)		62661 +	1685000202 +	ME-0130	ME-0131	ME-17
A150(04-12)		62799A	165000003 +	ME-0111	ME-0112	ME-15
A160(97-04)		62546	1685001802	ME-0128	ME-0129	ME-17
A160(97-04)		62661 +	1685000202 +	ME-0130	ME-0131	ME-17
A160(04-12)		62799A	165000003 +	ME-0111	ME-0112	ME-15
A160(12-)		67186	2465001203	ME-0105	ME-0106	ME-15
A160(12-)		67187	2465001303	ME-0107	ME-0108	ME-15
A160(12-)	13432	627063		ME-0144	ME-0145	ME-19
A180(04-12)		62799A	165000003 +	ME-0111	ME-0112	ME-15
A180(12-)		67186	2465001203	ME-0105	ME-0106	ME-15
A180(12-)		67187	2465001303	ME-0107	ME-0108	ME-15
180(12-)	13432	627063		ME-0144	ME-0145	ME-19
A190(97-04)		62661 +	1685000202 +	ME-0130	ME-0131	ME-17
A200(04-12)		62799A	165000003 +	ME-0111	ME-0112	ME-15
A200(12-)		67186	2465001203	ME-0105	ME-0106	ME-15
A200(12-)		67187	2465001303	ME-0107	ME-0108	ME-15
ATEGO(97-)		62794A	9705000403 +	ME-0140	ME-0141	ME-19
ATEGO（97-）		62794A	9705000403	ME-0140	ME-0141	ME-19
B150(05-12)		62799A	165000003 +	ME-0111	ME-0112	ME-15
B160(05-12)		62799A	165000003 +	ME-0111	ME-0112	ME-15
B160(11-)		67186	2465001203	ME-0105	ME-0106	ME-15
B160(11-)		67187	2465001303	ME-0107	ME-0108	ME-15
B180(05-12)		62799A	165000003 +	ME-0111	ME-0112	ME-15
B180(11-)		67185	2465000303	ME-0103	ME-0104	ME-14
B180(11-)		67186	2465001203	ME-0105	ME-0106	ME-15
B180(11-)		67187	2465001303	ME-0107	ME-0108	ME-15
B200(05-12)		62799A	165000003 +	ME-0111	ME-0112	ME-15
B200(11-)		67186	2465001203	ME-0105	ME-0106	ME-15
B200(11-)		67187	2465001303	ME-0107	ME-0108	ME-15
B220(11-)		67185	2465000303	ME-0103	ME-0104	ME-14
C180(07-)	13162	67612 +	2045000603 +	ME-0087	ME-0088	ME-12
C220(94-96) 2.2L	1844	62756A	2025002203 +	ME-0001	ME-0002	ME-1
C220(94-96) 2.2L				ME-0001-1	ME-0002	ME-1
C220(94-96) 2.2L				ME-0001-2	ME-0002	ME-1
C200(95-01)		62712 +	2025005203	ME-0001-1	ME-0003	ME-1
C230(95-01)		62712 +	2025005203	ME-0001-1	ME-0003	ME-1
C230(99-00) 2.3L	2286		2025006103	ME-0043	ME-0044	ME-5
C230(01-07)	2337 +	62786A	2035000503 +	ME-0077	ME-0078	ME-11
C230(01-07)	2337 +		2035000503 +	ME-0079	ME-0080	ME-11
C240(01-07)	2337 +	62786A	2035000503 +	ME-0077	ME-0078	ME-11
C240(01-07)	2337 +		2035000503 +	ME-0079	ME-0080	ME-11
C250(07-)		67168 +	2045000403 +	ME-0085	ME-0086	ME-12
C280(94-96) 2.8L	1845	62739A	2025004103 +	ME-0123	ME-0002	ME-16
C280(97-99) 2.8L	1844	62756A	2025002203 +	ME-0001	ME-0002	ME-1
C280(97-99) 2.8L				ME-0001-1	ME-0002	ME-1
C280(97-99) 2.8L				ME-0001-2	ME-0002	ME-1
C280(01-07)	2337 +	62786A	2035000503 +	ME-0077	ME-0078	ME-11

Model	DPI	NISSENS	OEM	Hongyan		Page
C280(01-07)	2337 +		2035000503 +	ME-0079	ME-0080	ME-11
C300(07-)		67168 +	2045000403 +	ME-0085	ME-0086	ME-12
C300（15-） 2.0L/15- C400 3.0L				ME-0146	ME-0147	ME-19
C320(01-07)	2337 +	62786A	2035000503 +	ME-0077	ME-0078	ME-11
C320(01-07)	2337 +		2035000503 +	ME-0079	ME-0080	ME-11
C350(07-)	13162	67612 +	2045000603 +	ME-0087	ME-0088	ME-12
C36(95-97) 3.6L	1845	62739A	2025004103 +	ME-0123	ME-0002-1	ME-16
C63 AMG (12-15) 6.3L	13358	67190	1975000003	ME-0109	ME-0110	ME-15
CL500(98-99) 5.0L	1313 +		1405001403	ME-0009	ME-0010	ME-2
CL500(00-06) 5.0L			2205000103 +	ME-0048	ME-0049	ME-6
CL500(00-06) 5.0L	2652	62774A +	2205000103 +	ME-0048	ME-0050	ME-6
CL550(08-12)	2875 +	67107A	2215002603 +	ME-0091	ME-0092	ME-13
CL550(08-12)		627025		ME-0091	ME-0093	ME-13
CL600(08-12)	2875 +	67107A	2215002603 +	ME-0091	ME-0092	ME-13
CL600(08-12)		627025		ME-0091	ME-0093	ME-13
CLK200(97-00)		62712 +	2025005203	ME-0001-1	ME-0003	ME-1
CLK230(97-00)		62712 +	2025005203	ME-0001-1	ME-0003	ME-1
CLS500(04-10)	2906	62797A	2115000202 +	ME-0125	ME-0126	ME-16
CLS500(04-10)				ME-0127	ME-0126	ME-17
CLS63 AMG (12-14) 5.5L	13358	67190	1975000003	ME-0109	ME-0110	ME-15
E200(92-95)		62551	2015000503	ME-0041	ME-0042	ME-5
E200(02-09)	2906	62797A	2115000202 +	ME-0125	ME-0126	ME-16
E200(02-09)				ME-0127	ME-0126	ME-17
E200(07-)		67168 +	2045000403 +	ME-0085	ME-0086	ME-12
E220(92-95)		62551	2015000503	ME-0041	ME-0042	ME-5
E220(02-09)	2906	62797A	2115000202 +	ME-0125	ME-0126	ME-16
E220(02-09)				ME-0127	ME-0126	ME-17
E250(07-)	13162	67612 +	2045000603 +	ME-0087	ME-0088	ME-12
E250(07-)		67168 +	2045000403 +	ME-0085	ME-0086	ME-12
E270(02-09)	2906	62797A	2115000202 +	ME-0125	ME-0126	ME-16
E270(02-09)				ME-0127	ME-0126	ME-17
E300(95-97) 3.0L	2069		2105000103	ME-0004	ME-0005	ME-2
E300(95-97) 3.0L		62612A	2105003203 +	ME-0006	ME-0005	ME-2
E300(07-)		67168 +	2045000403 +	ME-0085	ME-0086	ME-12
E300(07-)	13162	67612 +	2045000603 +	ME-0087	ME-0088	ME-12
E320(96-97) 3.2L	2189		2105000903	ME-0021	ME-0022	ME-3
E320(98-02) 3.2L	2290		2105002803 +	ME-0019	ME-0020	ME-3
E320(03-05) 3.2L	2868	62792A	2115000102 +	ME-0081	ME-0082	ME-11
E350(06-09) 3.5L	2868	62792A	2115000102 +	ME-0081	ME-0082	ME-11
E350(07-)	13162	67612 +	2045000603 +	ME-0087	ME-0088	ME-12
E350(07-)		67168 +	2045000403 +	ME-0085	ME-0086	ME-12
E400(92-93)	1432		1245007803 +	ME-0072	ME-0071	ME-9
E450(92-93)	1432		1245007803 +	ME-0072	ME-0071	ME-9
E500(92-93)	1432		1245007803 +	ME-0072	ME-0071	ME-9
E500(02-09)	2906	62797A	2115000202 +	ME-0125	ME-0126	ME-16
E500(02-09)				ME-0127	ME-0126	ME-17
E500(07-)	13162	67612 +	2045000603 +	ME-0087	ME-0088	ME-12
E55 AMG (97-03)		62615	2105004703 +	ME-0124	ME-0005	ME-16
E63 AMG (10-14) 5.5L	13358	67190	1975000003	ME-0109	ME-0110	ME-15
G500(02-08)		62599A	461500002 +	ME-0097	ME-0098	ME-14
G550(02-08)		62599A	461500002 +	ME-0097	ME-0098	ME-14

Model	DPI	NISSENS	OEM	Hongyan		Page
G55 (02-08)		62599A	461500002 +	ME-0097	ME-0098	ME-14
GLK280(07-)		67168 +	2045000403 +	ME-0085	ME-0086	ME-12
GLK350(07-)		67168 +	2045000403 +	ME-0085	ME-0086	ME-12
MB100/140				ME-0027	ME-0028	ME-4
MB100/140				ME-0029	ME-0030	ME-4
ML320(98-02) 3.2L	2190		163500003	ME-0054	ME-0055	ME-7
ML350(03-05) 3.5L	2345	62788A	163500303	ME-0056	ME-0055	ME-7
ML350(06-11)	2909	62576A	2515000003 +	ME-0089	ME-0090	ME-12
ML350(06-11)			2515000003 +	ME-0089-1	ME-0090	ME-12
ML400(98-04)				ME-0163	ME-0164	ME-22
ML430(99-01) 4.3L	2190		163500003	ME-0054	ME-0055	ME-7
ML500(02-05) 5.0L	2190		163500003	ME-0054	ME-0055	ME-7
ML500(06-11)	2909	62576A	2515000003 +	ME-0089	ME-0090	ME-12
ML500(06-11)			2515000003 +	ME-0089-1	ME-0090	ME-12
ML550(00-03) 5.5L	2345	62788A	163500303	ME-0056	ME-0055	ME-7
ML550(06-11)	2909	62576A	2515000003 +	ME-0089	ME-0090	ME-12
ML550(06-11)			2515000003 +	ME-0089-1	ME-0090	ME-12
R350(06-07)	2909	62576A	2515000003 +	ME-0089	ME-0090	ME-12
R350(06-07)			2515000003 +	ME-0089-1	ME-0090	ME-12
R500(06-07)	2909	62576A	2515000003 +	ME-0089	ME-0090	ME-12
R500(06-07)			2515000003 +	ME-0089-1	ME-0090	ME-12
S320(94-95) 3.2L	1312		1405000403	ME-0017	ME-0018	ME-3
S320(96-99) 3.2L	1847		1405002103	ME-0013	ME-0014	ME-2
S350(94-95) 3.5L	1311		1405001303 +	ME-0015	ME-0016	ME-3
S400(08-12)	2875 +	67107A	2215002603 +	ME-0091	ME-0092	ME-13
S400(08-12)		627025		ME-0091	ME-0093	ME-13
S420(94-99) 4.2L	1313 +		1405001403	ME-0009	ME-0010	ME-2
S430(98-00) 4.3L		62772	2205000103	ME-0045	ME-0046	ME-6
S430(98-00) 4.3L			2205000103	ME-0045	ME-0047	ME-6
S430(00-06) 4.3L			2205000103 +	ME-0048	ME-0049	ME-6
S430(00-06) 4.3L	2652	62774A +	2205000103 +	ME-0048	ME-0050	ME-6
S450(08-12)	2875 +	67107A	2215002603 +	ME-0091	ME-0092	ME-13
S450(08-12)		627025		ME-0091	ME-0093	ME-13
S500(94-99) 5.0L	1313 +		1405001403	ME-0009	ME-0010	ME-2
S500(98-00) 5.0L		62772	2205000103	ME-0045	ME-0046	ME-6
S500(98-00) 5.0L			2205000103	ME-0045	ME-0047	ME-6
S500(00-06) 5.0L			2205000103 +	ME-0048	ME-0049	ME-6
S500(00-06) 5.0L	2652	62774A +	2205000103 +	ME-0048	ME-0050	ME-6
S550(08-12)	2875 +	67107A	2215002603 +	ME-0091	ME-0092	ME-13
S550(08-12)		627025		ME-0091	ME-0093	ME-13
S600(08-12)	2875 +	67107A	2215002603 +	ME-0091	ME-0092	ME-13
S600(08-12)		627025		ME-0091	ME-0093	ME-13
SL430(89-)	2070		1295001203 +	ME-0074	ME-0075	ME-10
SL430(89-)	1314		1295001203 +	ME-0076	ME-0075	ME-10
SL500(89-)	2070		1295001203 +	ME-0074	ME-0075	ME-10
SL500(89-)	1314		1295001203 +	ME-0076	ME-0075	ME-10
SL55(00-08) 5.5L			2205000103 +	ME-0048	ME-0049	ME-6
SL55(00-08) 5.5L	2652	62774A +	2205000103 +	ME-0048	ME-0050	ME-6
SL600(04-09) 6.0L			2205000103 +	ME-0048	ME-0049	ME-6
SL600(04-09) 6.0L	2652	62774A +	2205000103 +	ME-0048	ME-0050	ME-6
SLK55 AMG (12-15) 5.5L	13358	67190	1975000003	ME-0109	ME-0110	ME-15

Model	DPI	NISSENS	OEM	Hongyan		Page
SPRINTER 3500(10-13)	13254	67156A +	68013630AA	ME-0099	ME-0100	ME-14
T1 207(77-)		62632	6015005503 +	ME-0025	ME-0026	ME-4
T1 209(77-)		62632	6015005503 +	ME-0025	ME-0026	ME-4
T1 309(77-)		62632	6015005503 +	ME-0025	ME-0026	ME-4
T1 407(77-)		62632	6015005503 +	ME-0025	ME-0026	ME-4
VANEO(02-05)		62781A	1685001102 +	ME-0130	ME-0129	ME-17
VARIO 613(96-11)		62626A	6685000102 +	ME-0138	ME-0139	ME-18
VARIO 615(96-11)		62626A	6685000102 +	ME-0138	ME-0139	ME-18
VARIO 618(96-11)		62626A	6685000102 +	ME-0138	ME-0139	ME-18
VITO 109(03-15)		67174	6395010701 +	ME-0136	ME-0137	ME-18
VITO 110(03-15)		67174	6395010701 +	ME-0136	ME-0137	ME-18
VITO 111(03-15)		67174	6395010701 +	ME-0136	ME-0137	ME-18
VITO 115(03-15)		67174	6395010701 +	ME-0136	ME-0137	ME-18
W201（82-93）	443+		2015001703+	ME-0154	ME0155	ME-20
W204(11-)				ME-0094	ME-0095	ME-13
W204(11-)				ME-0094	ME-0096	ME-13
W222（14-）				ME-0150	ME-0151	ME-20
MERCEDES BENZ(97-)				ME-0161	ME-0162	ME-21
MERCEDES BENZ				ME-0148	ME-0149	ME-20
MERCEDES BENZ				ME-0156	ME-0158	ME-21
MERCEDES BENZ				ME-0159	ME-0160	ME-21
MERCURY						
COLONY PARK(86-91) 5.0L	227		FOVY8005A/B +	FO-0035	FO-0036	FO-6
COLONY PARK(86-91)5.0L	227		FOVY8005A/B +	FO-0035	FO-0336	FO-53
COUGAR(94-97) 3.8L	1550			FO-0157	FO-0158	FO-26
COUGAR(94-97) 4.6L	1551			FO-0159	FO-0158	FO-26
COUGAR(95-02) 2.0/2.5L	1718 +	62050	FR5Z8005AA/AB	FO-0077	FO-0081	FO-13
MARINER(05-08) 3.0L	2307		4L8Z8005KA +	MA-0071	MA-0072	MA-11
MARINER(05-08)3.0L	2307	62003	4522301+	FO-0290	FO-0291	FO-45
MARINER(06-08) 2.3L	2762		5M6Z8005AC	FO-0107	FO-0108	FO-17
MARINER(06-08)2.3L	2762		5M6Z8005AC	FO-0344	FO-0108	FO-54
MARINER(06-11) 2.3/2.5L	2763		5M6Z8005BE +	FO-0105	FO-0106	FO-17
MARINER(09-11) 2.5L	13209		8L8Z18476A	FO-0107	FO-0252	FO-40
MARINER(09-11) 3.0L	13041			FO-0205	FO-0206	FO-33
MILIAN(06-09) 2.3/3.0L	2856		6E5Z8005B	FO-0113	FO-0114	FO-18
MONTEGO(05-07) 3.0L	2761		5F9H8005AC +	FO-0067	FO-0068	FO-11
MONTEREY(04-07) 4.2L	2258			FO-0160	FO-0161	FO-26
MOUNTAINEER(97-99) 4.0L	2174 +	69203	1L5Z8005MA	FO-0003	FO-0004	FO-1
MOUNTAINEER(97-99) 5.0L	1824 +	69204	F67H8005AA +	FO-0001	FO-0002	FO-1
MOUNTAINEER(02-05) 4.0/4.6L	2342		3L2Z8005ZZ +	FO-0016	FO-0017	FO-3
MOUNTAINEER(06-) 4.0/4.6L	2816 +		6L2Z8005AA +	FO-0096	FO-0097	FO-15
MYSTIQUE(95-02) 2.0/2.5L	1718 +	62050	FR5Z8005AA/AB	FO-0077	FO-0081	FO-13
SABLE(86-89) 3.0L	891			FO-0169	FO-0168-1	FO-27
SABLE(86-93) 2.5/3.0L	890		E70H8005AA +	FO-0167	FO-0168	FO-27
SABLE(88-95) 3.0/3.8L	1094 +	62065	E6DA8005EC +	FO-0031	FO-0032	FO-5
SABLE(88-95) 3.0/3.8L				FO-0047	FO-0048	FO-8
SABLE(96-05) 3.0L	1830		F6DZ8005A	FO-0043	FO-0044	FO-7
SABLE(08-09) 3.5L	2937		7T4Z8005A/B	FO-0115	FO-0116	FO-18
TOPAZ(92-94) 2.3/3.0L	1322			FO-0165	FO-0166	FO-27
TRACER 2.0L	1273			FO-0170	FO-0171	FO-28

Model	DPI	NISSENS	OEM	Hongyan		Page
VILLAGER(93-95) 3.0L	1511			FO-0151	FO-0152	FO-25
VILLAGER(99-02) 3.3L	2259			FO-0151	FO-0153	FO-25
MITSUBISHI						
3000GT(91-99) 3.0L	1298 +		MB605454 +	MI-0003	MI-0002	MI-1
CARISMA(95-) 1.6L			MB299522	MI-0090	MI-0091	MI-18
CARISMA(95-) 1.6L				MI-0090	MI-0091-1	MI-18
CARISMA(95-97) 1.6L				MI-0092	MI-0093	MI-18
COLT(91-95) 1.3/1.5/1.8L				MI-0115	MI-0116	MI-22
COLT(92-)				MI-0083	MI-0084	MI-16
COLT(92-) 1.3L				MI-0081	MI-0082	MI-16
COLT(92-) 1.3L				MI-0081	MI-0082-1	MI-16
COLT(04-)			CMR993323 +	MI-0063	MI-0064	MI-13
DELICA(07-)				MI-0159	MI-0160	MI-29
DELICA(07-)				MI-0159	MI-0161	MI-29
DELICA			CW749167 +	MI-0030	MI-0031	MI-7
DELICA				MI-0030	MI-0032	MI-7
DELICA				MI-0030	MI-0033	MI-7
DELICA				MI-0113	MI-0114	MI-22
DELICA				MI-0183	MI-0184	MI-33
DELICA				MI-0190	MI-0191	MI-34
DELICA				MI-0192	MI-0193	MI-34
DELICA				MI-0204	MI-0184	MI-36
DELICA（00-）				MI-0205	MI-0206	MI-36
DELICA（00-）				MI-0205	MI-0207	MI-36
DELICA（00-）				MI-0205	MI-0208	MI-36
DELICA（87-93 ）				MI-0030	MI-0248	MI-43
DELICA（87-93）				MI-0030	MI-0282	MI-48
DIAMANTE(92-96) 3.0L	1316		MB660673 +	MI-0001	MI-0002	MI-1
DIAMANTE(97-04) 3.5L			MR160763 +	MI-0046	MI-0047	MI-10
ECLIPSE(00-05) 2.4L	2438 +		MR373103 +	MI-0087	MI-0089	MI-17
ECLIPSE(00-05) 2.4L	2438 +		MR373103 +	MI-0087	MI-0089-1	MI-17
ECLIPSE(00-05) 3.0L	2410 +		MR373104 +	MI-0087	MI-0088	MI-17
ECLIPSE(00-05) 3.0L	2410 +		MR373104 +	MI-0087	MI-0088-1	MI-17
ECLIPSE(06-12) 2.4L	2842 +			MI-0111	MI-0112	MI-22
ECLIPSE(90-94) 1.8/2.0L	1145 +			MI-0128	MI-0129	MI-24
ECLIPSE(95-98) 2.0L	2023 +		MR127910 +	MI-0094	MI-0095	MI-19
ECLIPSE(95-98) 2.0L	2023 +		MR127910 +	MI-0094	MI-0095-1	MI-19
ECLIPSE(95-99) 2.OL	2024			MI-0130	MI-0131	MI-24
ECLIPSE（95-00）2.5L	1892			MI-0130	MI-0284	MI-48
ECLIPSE（99- ）2.4L	2300 +			MI-0286	MI-0287	MI-49
ENDEAVOR(04-10) 3.8L	2675			MI-0079	MI-0080	MI-15
EXPO(92-95) 2.4L	1921		MB924249	MI-0010	MI-0011	MI-3
EXPO(92-95) 2.4L	1736		MB924251	MI-0012	MI-0011	MI-3
GALANT（87-92）2.0L	233			MI-0218	MI-0219	MI-38
GALANT（87-92）2.0L	233			MI-0221	MI-0222	MI-39
GALANT(89-92) 2.0L	233			MI-0141	MI-0142	MI-26
GALANT(94-98) 2.4L	1838		MB845810 +	MI-0044	MI-0045	MI-10
GALAN（99-02）2.4L	2300 +			MI-0286	MI-0287	MI-49
GALANT（04-12）2.4/3.8L	2723			MI-0267	MI-0268	MI-46
L200(96-) 2.5L		62895A	MR258668 +	MI-0106	MI-0107	MI-21

Model	DPI	NISSENS	OEM	Hongyan		Page
L200(96-00)				MI-0149	MI-0150	MI-28
L200(96-00)				MI-0149	MI-0151	MI-28
L200(07-)			MN135033 +	MI-0096	MI-0097	MI-19
L200(07-)				MI-0096	MI-0098	MI-19
L200			MR127853	MI-0050	MI-0051	MI-11
L200				MI-0050	MI-0051-1	MI-11
L200				MI-0050	MI-0052	MI-11
L300				MI-0162	MI-0163	MI-30
LANCER(95-99)				MI-0072	MI-0073	MI-14
LANCER(95-99)				MI-0074	MI-0073	MI-14
LANCER(95-99)				MI-0077	MI-0078	MI-15
LANCER(01-)				MI-0070	MI-0071	MI-14
LANCER(01-)				MI-0075	MI-0076	MI-15
LANCER(01-)				MI-0145	MI-0144	MI-27
LANCER(01-)				MI-0070	MI-0071-1	MI-14
LANCER(01-)				MI-0075	MI-0076-1	MI-15
LANCER(01-)				MI-0235	MI-0076	MI-41
LANCER(02-07) 2.0L	2448 +	62894	MR968858 +	MI-0023	MI-0024	MI-5
LANCER(02-07) 2.0L				MI-0023	MI-0024-1	MI-5
LANCER(02-07) 2.0L				MI-0023	MI-0025	MI-5
LANCER(02-07) 2.0L				MI-0023	MI-0025-1	MI-5
LANCER(02-07) 2.0L				MI-0023	MI-0026	MI-6
LANCER(02-07) 2.0L				MI-0023	MI-0026-1	MI-6
LANCER(02-07) 2.0L				MI-0027	MI-0024	MI-6
LANCER(03-04) 2.0L	2676	628956	MR464612	MI-0028	MI-0029	MI-6
LANCER(07-)				MI-0146	MI-0147	MI-27
LANCER(07-)				MI-0146	MI-0148	MI-27
LANCER(08-10) 2.0/2.4L	2979	628952	MN156092 +	MI-0099	MI-0100	MI-20
LANCER(09-)				MI-0157	MI-0158	MI-29
LANCER(10-)				MI-0041	MI-0132	MI-25
LANCER(10-)				MI-0041	MI-0133	MI-25
LANCER(10-)				MI-0125	MI-0126	MI-24
LANCER(10-)				MI-0127	MI-0126	MI-24
LANCER				MI-0143	MI-0144	MI-27
LANCER				MI-0181	MI-0182	MI-33
LANCER				MI-0185	MI-0186	MI-33
LANCER				MI-0187	MI-0186	MI-33
LANCER				MI-0121	MI-0122	MI-23
LANCER				MI-0123	MI-0124	MI-23
LANCER（10-）				MI-0211	MI-0126	MI-37
LANCER（08-10）2.0/2.4L	2979	628952	MN156092	MI-0099	MI-0285	MI-49
LANCER（10-）				MI-0306	MI-0126	MI-52
MAGIC(01-05)				MI-0117	MI-0118	MI-22
MAGIC(10-)				MI-0119	MI-0118	MI-23
MINICAB			MR314705 +	MI-0198	MI-0199	MI-35
MINICAB			MR314705 +	MI-0198	MI-0199	MI-35
MIRAGE(93-95) 1.5/1.8L	1393 +		MB66056 +	MI-0013	MI-0014	MI-3
MIRAGE(93-95) 1.5/1.8L	1956 +		MB660566 +	MI-0015	MI-0014	MI-3
MIRAGE(97-02) 1.5/1.8L	1907 +	628591	MR187964 +	MI-0039	MI-0040	MI-9
MIRAGE(97-02) 1.5/1.8L				MI-0039	MI-0040-1	MI-9
MIRAGE(97-02) 1.5/1.8L				MI-0041	MI-0040	MI-9

Model	DPI	NISSENS	OEM	Hongyan		Page
MIRAGE(97-02) 1.5/1.8L				MI-0042	MI-0043	MI-9
MIRAGE(97-02) 1.5/1.8L				MI-0042	MI-0043-1	MI-10
MIRAGE（14-17）1.2L	13469		1350A541/670	MI-0212	MI-0213	MI-37
MIRAGE（88-92）	234			MI-0220	MI-0219	MI-38
MIRAGE（88-92）	234			MI-0223	MI-0222	MI-39
MONTERO SPORT(96-) 2.5L		62895A	MR258668 +	MI-0106	MI-0107	MI-21
MONTERO SPORT(96-) 3.0L	2278	68154	MR239626 +	MI-0106	MI-0108	MI-21
MONTERO SPORT(96-98) 2.4L	2073			MI-0106	MI-0109	MI-21
MONTERO SPORT(96-03) 2.5L		62895A	MR258668 +	MI-0106	MI-0107	MI-21
MONTERO SPORT(96-03) 3.0L	2278	68154	MR239626 +	MI-0106	MI-0108	MI-21
MONTERO(01-06) 3.5/3.8L	2467 +		MR993037 +	MI-0065	MI-0066	MI-13
MONTERO(01-06) 3.5/3.8L				MI-0065	MI-0067	MI-13
MONTERO（95-96）3.0L	2071			MI-0252	MI-0253	MI-44
MONTERO（01-06）3.5/3.8L				MI-0065	MI-0261	MI-45
OUTLANDER(14-15) 2.4/3.0L	13470			MI-0194	MI-0195	MI-34
OUTLANDER SPORT（14-）2.0L	13443		1350A694	MI-0300	MI-0301	MI-51
PAJERO(88-91)		62884	MB538805 +	MI-0059	MI-0120	MI-23
PAJERO(90-) 2.8L				MI-0004	MI-0006	MI-1
PAJERO(92-96)				MI-0059	MI-0060	MI-12
PAJERO(93-98)			MB890954 +	MI-0004	MI-0005	MI-1
PAJERO SPORT(96-) 2.5L		62895A	MR258668 +	MI-0106	MI-0107	MI-21
PAJERO SPORT(96-) 3.0L	2278	68154	MR239626 +	MI-0106	MI-0108	MI-21
PAJERO(92-96）	2071			MI-0249	MI-0250	MI-43
PAJERO V32（92-96）				MI-0249	MI-0251	MI-43
PRECIS(90-94) 1.5L	1081 +		2531024000 +	HY-0020		HY-04
PROTON SAGA（84-98）				MI-0224	MI-0225	MI-39
PAJERO(93-98) 2.8L				MI-0240		MI-42
RAIDER(06-09) 3.7/4.7L	2883			MI-0068	MI-0069	MI-13
VARICA（98-）				MI-0200	MI-0201	MI-35
VARICA(99-)				MI-0085	MI-0086	MI-16
VARICA(99-）			MB356153	MI-0236	MI-0237	MI-41
VARICA(99-)				MI-0238	MI-0239	MI-41
MITSUBISHI			MR126104	MI-0007	MI-0008	MI-2
MITSUBISHI			MR126104	MI-0007	MI-0008-1	MI-2
MITSUBISHI				MI-0007	MI-0009	MI-2
MITSUBISHI				MI-0007	MI-0009-1	MI-2
MITSUBISHI			MR312099 +	MI-0016	MI-0017	MI-4
MITSUBISHI			MR212455 +	MI-0018	MI-0019	MI-4
MITSUBISHI				MI-0018	MI-0020	MI-4
MITSUBISHI				MI-0021	MI-0022	MI-4
MITSUBISHI			MR355050 +	MI-0034	MI-0035	MI-7
MITSUBISHI			MR127853	MI-0036	MI-0037	MI-8
MITSUBISHI				MI-0036	MI-0037-1	MI-8
MITSUBISHI				MI-0036	MI-0038	MI-8
MITSUBISHI				MI-0036	MI-0038-1	MI-8
MITSUBISHI			MR431239 +	MI-0048	MI-0049	MI-10
MITSUBISHI				MI-0053	MI-0054	MI-11
MITSUBISHI			MR993562 +	MI-0061	MI-0062	MI-12
MITSUBISHI				MI-0092	MI-0093-1	MI-18
MITSUBISHI				MI-0101	MI-0102	MI-20
MITSUBISHI				MI-0101	MI-0103	MI-20

Model	DPI	NISSENS	OEM	Hongyan		Page
MITSUBISHI				MI-0106	MI-0110	MI-21
MITSUBISHI				MI-0152	MI-0153	MI-28
MITSUBISHI				MI-0188	MI-0189	MI-34
MITSUBISHI				MI-0196	MI-0197	MI-35
MITSUBISHI				MI-0196	MI-0197	MI-35
MITSUBISHI			1350A014 +	MI-0232	MI-0233	MI-40
MITSUBISHI				MI-0234	MI-0009	MI-41
MITSUBISHI				MI-0242	MI-0243	MI-42
MITSUBISHI				MI-0244	MI-0245	MI-42
MITSUBISHI				MI-0244-1	MI-0245	MI-42
MITSUBISHI				MI-0252	MI-0254	MI-44
MITSUBISHI				MI-0255	MI-0256	MI-44
MITSUBISHI				MI-0257	MI-0258	MI-44
MITSUBISHI				MI-0259	MI-0260	MI-45
MITSUBISHI				MI-0262	MI-0263	MI-45
MITSUBISHI				MI-0262	MI-0264	MI-45
MITSUBISHI				MI-0265	MI-0266	MI-46
MITSUBISHI				MI-0269	MI-0080	MI-46
MITSUBISHI				MI-0270	MI-0271	MI-46
MITSUBISHI				MI-0272	MI-0273	MI-47
MITSUBISHI				MI-0274	MI-0275	MI-47
MITSUBISHI				MI-0276	MI-0277	MI-47
MITSUBISHI				MI-0278	MI-0279	MI-47
MITSUBISHI				MI-0259	MI-0283	MI-48
MITSUBISHI				MI-0280	MI-0281	MI-48
MITSUBISHI				MI-0289		MI-49
MITSUBISHI				MI-0291		MI-50
MITSUBISHI				MI-0293	MI-0294	MI-50
MITSUBISHI				MI-0293	MI-0295	MI-50
MITSUBISHI			1770082M60	MI-0296	MI-0297	MI-50
MITSUBISHI				MI-0298	MI-0299	MI-51
MITSUBISHI				MI-0234	MI-0009	MI-41
MITSUBISHI (14-17)1.2L	13469			NI-0390	NI-0391	NI-84
MORRIS GARAGES						
MORRIS GARAGES				MG-0001	MG-0002	MG-1
RUITENG(15-)1.5LT				MG-0003	MG-0004	MG-1
RUITENG(15-)2.0LT				MG-0003	MG-0005	MG-1
NISSAN						
200SX(95-98) 2.0L	1152 +		2141057Y00 +	NI-0001	NI-0002	NI-1
200SX(95-98) 2.0L	1317		2141064Y01 +	NI-0003	NI-0002	NI-1
200SX(95-98) 2.0L	1426		2146064Y02 +	NI-0003	NI-0004	NI-2
200SX(95-98) 2.0L	1426		2146064Y02 +	NI-0003	NI-0004-1	NI-2
240SX(89-90) 2.4L	1425			NI-0019	NI-0026	NI-10
240SX(89-94) 2.4L	46			NI-0017	NI-0021	NI-8
240SX(89-94) 2.4L	1241			NI-0019	NI-0021	NI-8
240SX(91-94) 2.4L	1276 +			NI-0017	NI-0026	NI-10
240SX(95-98) 2.4L	1751		2146070F00	NI-0153	NI-0154	NI-46
300ZX(89-96) 3.0L	1151 +			NI-0226	NI-0227	NI-58
300ZX(90-96)	1150			NI-0013	NI-0016	NI-6

Model	DPI	NISSENS	OEM	Hongyan		Page
350Z(03-06) 3.5L	2576 +		21410CD010 +	NI-0085	NI-0066	NI-29
350Z(07-09)	2999 +			NI-0274	NI-0066	NI-66
AXXESS(91-94) 2.4L	48 +		2146055E01 +	NI-0013	NI-0014	NI-6
AXXESS(91-94) 2.4L				NI-0013	NI-0015	NI-6
ALTIMA(93-99) 2.4L	1573 +		214601E400 +	NI-0041	NI-0042	NI-17
ALTIMA(93-99) 2.4L				NI-0041	NI-0042-1	NI-17
ALTIMA(00-01) 2.4L	2333		214100Z800 +	NI-0041	NI-0043	NI-17
ALTIMA(00-01) 2.4L				NI-0041	NI-0043-1	NI-17
ALTIMA(02-06) 2.5L	2414		21460CA010	NI-0056	NI-0057	NI-22
ALTIMA(02-06) 2.5L				NI-0056	NI-0057-1	NI-22
ALTIMA(02-06) 2.5L				NI-0056	NI-0057-2	NI-22
ALTIMA(02-06) 2.5L				NI-0058	NI-0057	NI-22
ALTIMA(02-06) 2.5L				NI-0059	NI-0057	NI-23
ALTIMA(07-12) 2.5/3.5L	2988		21460JA00A	NI-0175	NI-0176	NI-50
ARMADA(05-14) 5.6L	2691		214607S000	NI-0075	NI-0076	NI-27
ATLAS (95-99)				NI-0245	NI-0246	NI-62
ATLAS (95-99)				NI-0247	NI-0248	NI-62
ATLAS (95-99)				NI-0247	NI-0248-1	NI-62
ATLAS (95-99)				NI-0249	NI-0250	NI-63
ATLAS (95-99)				NI-0213	NI-0214	NI-56
ATLAS (95-99)				NI-0215	NI-0216	NI-56
ATLAS (95-99)				NI-0217	NI-0218	NI-57
ATLAS（99-）				NI-0349	NI-0350	NI-78
ATLAS				NI-0292	NI-0293	NI-68
BLUEBIRD(87-91）	1186+	62997+	2146085E00	NI-0333	NI-0015	NI-75
BLUEBIRD(89-00）	1186+	62997+	2146085E00	NI-0333	NI-0015	NI-75
CABSTAR (06-)				NI-0221	NI-0222	NI-57
CABSTAR (06-)				NI-0223	NI-0222	NI-57
CABSTAR (06-)				NI-0224	NI-0222	NI-58
CABSTAR (06-)				NI-0225	NI-0222	NI-58
CABSTAR (06-)				NI-0169	NI-0170	NI-50
CIVILIAN BUS (09-)				NI-0165	NI-0166	NI-49
D21(86-94) 2.4/3.0L	145 +		2145001G11 +	NI-0052	NI-0053	NI-21
D21(86-94) 2.4/3.0L	314 +		2145007G11 +	NI-0054	NI-0053	NI-21
D21(86-94) 2.4/3.0L	314 +		2145007G11 +	NI-0054	NI-0053-1	NI-21
FRONTIER(98-15) 2.4/3.3L	2151 +		21412S400 +	NI-0027	NI-0028	NI-11
FRONTIER(98-15) 2.4/3.3L	2151 +		21412S400 +	NI-0027	NI-0028-1	NI-11
FRONTIER(98-15) 2.4/3.3L	2151 +		21412S400 +	NI-0027	NI-0028-2	NI-11
FRONTIER(98-15) 2.4/3.3L	2151 +		21412S400 +	NI-0027	NI-0028-3	NI-11
FRONTIER(01-04) 3.3L	2049		21410QW005A +	NI-0035	NI-0036	NI-16
FRONTIER(01-04) 3.3L				NI-0035	NI-0037	NI-16
FRONTIER(05-14) 2.5L	2808		21460EA005	NI-0160	NI-0159	NI-48
FRONTIER（05-14）2.5L	2808		21460EA005	NI-0328	NI-0159	NI-74
FRONTIER(05-14) 4.0L	2807		21460EA215	NI-0158	NI-0159	NI-48
FRONTIER(05-14) 4.0L	2807		21460EA215	NI-0327	NI-0159	NI-74
INTERSTAR X70(02-)		67287		NI-0283	NI-0284	NI-67
JUKE(10-)		606119	214101KK1A	NI-0314	NI-0315	NI-72
JUKE(10-)1.5L		68746	214101FE0B	NI-0316	NI-0317	NI-72
JUKE(10-)		606120	214103ZUOA	NI-0318	NI-0319	NI-73
LAUREL(93-99）			214106L000	NI-0336	NI-0337	NI-76
		68773	214103NF0A	NI-0281	NI-0282	NI-67

Model	DPI	NISSENS	OEM	Hongyan		Page
LEAF(11-12)				NI-0297	NI-0298	NI-69
LUCINO(96-00) 2.0L	1152 +		2141057Y00 +	NI-0001	NI-0002	NI-1
LUCINO(96-00) 2.0L	1317		2141064Y01 +	NI-0003	NI-0002	NI-1
LUCINO(96-00) 2.0L	1426		2146064Y02 +	NI-0003	NI-0004	NI-2
LUCINO(96-00) 2.0L	1426		2146064Y02 +	NI-0003	NI-0004-1	NI-2
MAXIMA(95-99) 3.0L	1752 +			NI-0102	NI-0100	NI-35
MAXIMA(95-99)3.0L	1752			NI-0393	NI-0100	NI-85
MAXIMA(95-99)3.0L	1752			NI-0394	NI-0091	NI-85
MAXIMA(00-03) 3.0/3.5L	2329 +		2146002Y000 +	NI-0099	NI-0101	NI-34
MICRA(02-) 1.5L			21410AY602 +	NI-0279	NI-0280	NI-67
MICRA(10-)1.2L				NI-0295	NI-0417	NI-88
MICRA(10-)			2114101HCIA	NI-0295	NI-0296	NI-69
MURANO(03-07) 3.5L	2578 +		21460CA010 +	NI-0056	NI-0060	NI-23
MURANO(03-07) 3.5L				NI-0056	NI-0060-1	NI-23
MURANO(03-07) 3.5L				NI-0056	NI-0060-2	NI-23
MURANO(03-07) 3.5L				NI-0058	NI-0060	NI-24
MURANO(03-07) 3.5L				NI-0059	NI-0060	NI-24
MURANO(08-14) 3.5L	13039			NI-0219	NI-0220	NI-57
MURANO(15-16)3.5l	13532		214605AA0A	NI-0410	NI-0411	NI-87
MAXIMA (09-12)3.5L	2988		21460JA00A	NI-0175	NI-0176	NI-50
MARCH				NI-0183	NI-0184	NI-51
MARCH(10-)1.2L				NI-0295	NI-0417	NI-88
MARCH(10-)			2114101HCIA	NI-0295	NI-0296	NI-69
NAVARA(16-)				NI-0413	NI-0414	NI-88
NOTE(06-) 1.5L			21410AY602 +	NI-0279	NI-0280	NI-67
NX (91-93) 1.6/2.0L	1152 +		2141057Y00 +	NI-0001	NI-0002	NI-1
NX (91-93) 1.6/2.0L	1317		2141064Y01 +	NI-0003	NI-0002	NI-1
NX (91-93) 1.6/2.0L	1426		2146064Y02 +	NI-0003	NI-0004	NI-2
NX (91-93) 1.6/2.0L	1426		2146064Y02 +	NI-0003	NI-0004-1	NI-2
NV200(08-)				NI-0188	NI-0189	NI-52
NV200(09-）		67369	21410JX00 +	NI-0310	NI-0311	NI-72
NV200(10-）				NI-0330	NI-0331	NI-75
NV200(16-)				NI-0413	NI-0414	NI-88
NV200	2981		21410JX00A +	NI-0397	NI-0089	NI-85
NP200(08-) 1.6L		637609	8200735038	RE-0081	RE-0082	RE-12
OTTI（05-)			214006A0A4 +	NI-0312	NI-0313	NI-72
PATHFINDER(87-95) 3.0L	145 +		2145001G11 +	NI-0052	NI-0053	NI-21
PATHFINDER(87-95) 3.0L	314 +		2145007G11 +	NI-0054	NI-0053	NI-21
PATHFINDER(87-95) 3.0L	314 +		2145007G11 +	NI-0054	NI-0053-1	NI-21
PATHFINDER(96-00) 3.3L	2075 +			NI-0027	NI-0032	NI-13
PATHFINDER(96-00) 3.3L				NI-0027	NI-0032-1	NI-13
PATHFINDER(96-00) 3.3L				NI-0027	NI-0032-2	NI-13
PATHFINDER(96-00) 3.3L				NI-0027	NI-0032-3	NI-13
PATHFINDER(96-00) 3.3L	2075		21460VG100 +	NI-0035	NI-0034	NI-15
PATHFINDER(96-00) 3.3L				NI-0035	NI-0034-1	NI-15
PATHFINDER(01-04) 3.5L	2459 +		21460AG910 +	NI-0027	NI-0031	NI-12
PATHFINDER(01-04) 3.5L			21460AG300 +	NI-0027	NI-0031-1	NI-12
PATHFINDER(05-12) 4.0/5.6L	2807		21460EA215	NI-0158	NI-0159	NI-48
PATHFINDER(05-12)4.0/5.6L	2807		21460EA215	NI-0327	NI-0159	NI-74
PATHFINDER(13-17)3.5L	13348			NI-0388	NI-0389	NI-84
PATROL (10-)				NI-0179	NI-0180	NI-51

Model	DPI	NISSENS	OEM	Hongyan		Page
PICKUP(95-97) 2.4L	145 +		2145001G11 +	NI-0052	NI-0053	NI-21
PICKUP(95-97) 2.4L	314 +		2145007G11 +	NI-0054	NI-0053	NI-21
PICKUP(95-97) 2.4L	314 +		2145007G11 +	NI-0054	NI-0053-1	NI-21
PICKUP				NI-0364	NI-0365	NI-80
PIXO(09-14) 1.1L		69401	1770068K00 +	SUZ-0003	SUZ-0004	SUZ-1
PRECEA(94-98)			21410OM200	NI-0007	NI-0010	NI-4
PRIMASTAR(01-08) 1.9/2.0L		63025A	91166000 +	RE-0085	RE-0086	RE-12
PULSAR(87-88)				NI-0377	NI-0378	NI-82
PULSAR(88-89) 1.8L	126 +			NI-0228	NI-0229	NI-58
PULSAR(88-89) 1.8L	126 +			NI-0228-1	NI-0229	NI-59
PULSAR(89-90) 1.6L	788 +			NI-0230-1	NI-0231	NI-59
PULSAR(89-90) 1.6L	788 +			NI-0230	NI-0231	NI-59
PULSAR(94-98)			21410OM204 +	NI-0001	NI-0009	NI-4
PULSAR(94-98)			21410OM200	NI-0007	NI-0010	NI-4
QUEST(04-09) 3.5L	2578 +		21460CA010 +	NI-0056	NI-0060	NI-23
QUEST(04-09) 3.5L				NI-0056	NI-0060-1	NI-23
QUEST(04-09) 3.5L				NI-0056	NI-0060-2	NI-23
QUEST(04-09) 3.5L				NI-0058	NI-0060	NI-24
QUEST(04-09) 3.5L				NI-0059	NI-0060	NI-24
QUEST(11-14) 3.5L	13039			NI-0219	NI-0220	NI-57
QASHAQL(07-) 2.0L				NI-0241	NI-0242	NI-61
QASHAQL(07-) 2.0L				NI-0241-1	NI-0242	NI-61
QASHAQL(07-) 2.0L				NI-0243	NI-0244	NI-61
QASHAQL(07-) 2.0L				NI-0243-1	NI-0244	NI-62
QASHAQL（15-）				NI-0368	NI-0369	NI-81
QASHAQL（15-）				NI-0368	NI-0370	NI-81
QASHAQL				NI-0241	NI-0294	NI-69
QASHAQL					NI-0401	NI-86
ROGUE(08-13) 2.5L	13047			NI-0238	NI-0239	NI-60
ROGUE(14-15)2.5L	13431		214604BA0A	NI-0320	NI-0321	NI-73
SENTRA(89-90) 1.6L	788 +			NI-0230-1	NI-0231	NI-59
SENTRA(89-90) 1.6L	788 +			NI-0230	NI-0231	NI-59
SENTRA(91-00) 1.6/L	1152 +		2141057Y00 +	NI-0001	NI-0002	NI-1
SENTRA(91-00) 1.6/1.8/2.0/L	1317		2141064Y01 +	NI-0003	NI-0002	NI-1
SENTRA(91-00) 1.6/1.8/2.0/L	1178		2141064Y01	NI-0001	NI-0004	NI-1
SENTRA(91-00) 1.6/1.8/2.0/L	1178		2141064Y01	NI-0001	NI-0004-1	NI-1
SENTRA(91-00) 1.6/1.8/2.0/L	1426		2146064Y02 +	NI-0003	NI-0004	NI-2
SENTRA(91-00) 1.6/1.8/2.0/L	1426		2146064Y02 +	NI-0003	NI-0004-1	NI-2
SENTRA(00-06) 1.8L	2346 +		214604M400 +	NI-0103	NI-0104	NI-35
SENTRA(00-06) 1.8L	2346 +		214604M400 +	NI-0103	NI-0104-1	NI-36
SENTRA(00-01) 2.0L	2328		21460M200	NI-0090	NI-0094	NI-31
SENTRA(00-01) 2.0L				NI-0090	NI-0095	NI-32
SENTRA(02-06) 2.5L	2469			NI-0108	NI-0107	NI-37
SENTRA(02-06)2.5L			214606N103	NI-0106	NI-0332	NI-75
SENTRA(07-12) 2.0/2.5L	2998 +			NI-0171	NI-0172	NI-50
SENTRA(07-)				NI-0205	NI-0206	NI-55
SENTRA(13-14) 1.8L	13365			NI-0194	NI-0195	NI-53
SVLIANA'200BAS				NI-0358	NI-0359	NI-79
SUNNY(94-98)			21410OM200	NI-0007	NI-0010	NI-4
SUNNY(07-)				NI-0128	NI-0129	NI-42
SUNNY(07-)				NI-0205	NI-0206	NI-55

Model	DPI	NISSENS	OEM	Hongyan		Page
SUNNY(13-)				NI-0285	NI-0286	NI-67
SUNNY B11				NI-0287	NI-0288	NI-68
SUNNY B11				NI-0288	NI-0287	NI-68
SUNNY				NI-0285	NI-0416	NI-88
SUNNY SENTRA				NI-0334	NI-0002	NI-75
SUNNY SENTRA				NI-0335	NI-0006	NI-76
NISSAN SUNNY				NI-0289	NI-0290	NI-68
STANZA(90-92) 2.4L	48 +		2146055E01 +	NI-0013	NI-0014	NI-6
STANZA(90-92) 2.4L				NI-0013	NI-0015	NI-6
TSUBAME(95-04) 2.6L	1178		2141064Y01	NI-0001	NI-0004	NI-1
TSUBAME(95-04) 2.6L	1178		2141064Y01	NI-0001	NI-0004-1	NI-1
TSURU(96-15) 1.6L	1178		2141064Y01	NI-0001	NI-0004	NI-1
TSURU(96-15) 1.6L	1178		2141064Y01	NI-0001	NI-0004-1	NI-1
TSURU(97-15) 1.6L	1317		2141064Y01 +	NI-0003	NI-0002	NI-1
TSURU(97-15) 1.6L	1426		2146064Y02 +	NI-0003	NI-0004	NI-2
TSURU(97-15) 1.6L	1426		2146064Y02 +	NI-0003	NI-0004-1	NI-2
TSUBAME(99-04) 1.6L	1152 +		2141057Y00 +	NI-0001	NI-0002	NI-1
TSUBAME(99-04) 1.6L	1317		2141064Y01 +	NI-0003	NI-0002	NI-1
TSUBAME(99-04) 1.6L	1426		2146064Y02 +	NI-0003	NI-0004	NI-2
TSUBAME(99-04) 1.6L	1426		2146064Y02 +	NI-0003	NI-0004-1	NI-2
TITAN(04-14) 5.6L	2691		214607S000	NI-0075	NI-0076	NI-27
TIIDA（06-）				NI-0353	NI-0354	NI-78
TIIDA（06-）				NI-0353	NI-0355	NI-78
TIIDA（06-）				NI-0353	NI-0356	NI-79
TIIDA（06-）				NI-0353	NI-0357	NI-79
TIIDA (12-15) 1.8L	13260 +			NI-0190	NI-0191	NI-52
TIIDA（12-15）1.6/1.8L	13260+			NI-0190	NI-0329	NI-74
TRUK				NI-0192	NI-0193	NI-53
TRUK			2140000Z0H +	NI-0192	NI-0415	NI-88
TERRANO(96-) 2.7L		68708A	214107F000	NI-0207	NI-0208	NI-55
TERRANO(96-) 2.7L				NI-0207	NI-0209	NI-55
UD			2140003Z65/70 +	NI-0299	NI-0300	NI-69
UD			2140003Z79 +	NI-0301	NI-0302	NI-70
UD			2140003Z01/04	NI-0303	NI-0304	NI-70
UD				NI-0305	NI-0300	NI-70
UD				NI-0305	NI-0306	NI-70
UD				NI-0303	NI-0300	NI-71
UD				NI-0303	NI-0306	NI-71
UD				NI-0303	NI-0307	NI-71
UD				NI-0325	NI-0326	NI-74
UD BUS(01-)			214006Z003	NI-0406		NI-87
UD CONDOR				NI-0291	NI-0127	NI-68
UD CONDOR(99-)			2140034Z13 +	NI-0402		NI-86
UD CONDOR(99-)			2140034Z14	NI-0404		NI-86
UD TRUCK CAB 99-			2146034200	NI-0351	NI-0352	NI-78
UD TRUK			2140000Z0H +	NI-0192	NI-0415	NI-88
URVAN (04-)				NI-0264	NI-0265	NI-65
URVAN (04-)				NI-0266	NI-0267	NI-65
URVAN(06-) 2.4L				NI-0136	NI-0137	NI-44
URVAN(06-) 2.4L				NI-0138	NI-0137	NI-44
URVAN(06-) 2.4L				NI-0139	NI-0140	NI-44

Model	DPI	NISSENS	OEM	Hongyan		Page
URVAN(06-) 2.4L				NI-0141	NI-0140	NI-44
URVAN(06-) 2.4L				NI-0142	NI-0140	NI-45
URVAN(06-) 2.4L				NI-0139	NI-0143	NI-45
URVAN(06-) 2.4L				NI-0139	NI-0322	NI-73
URVAN（04-）				NI-0264	NI-0360	NI-79
URVAN（04-）				NI-0361	NI-0267	NI-80
URVAN (06-)2.4L				NI-0387	NI-0322	NI-84
VAN(87-88) 2.4L	219 +		2146017C00 +	NI-0061	NI-0062	NI-24
VAN(87-88) 2.4L				NI-0063	NI-0064	NI-24
VERSA(12-15) 1.6/1.8L	13260 +			NI-0190	NI-0191	NI-52
XTERRA(00-04)1.4/3.3L	2151 +		21412S400 +	NI-0027	NI-0028	NI-11
XTERRA(00-04) 1.4/3.3L	2151 +		21412S400 +	NI-0027	NI-0028-1	NI-11
XTERRA(00-04) 1.4/3.3L	2151 +		21412S400 +	NI-0027	NI-0028-2	NI-11
XTERRA(00-04) 1.4/3.3L	2151 +		21412S400 +	NI-0027	NI-0028-3	NI-11
XTERRA(01-04) 3.3L	2049		21410QW005A +	NI-0035	NI-0036	NI-16
XTERRA(01-04) 3.3L				NI-0035	NI-0037	NI-16
XTERRA(05-14) 4.0L	2807		21460EA215	NI-0158	NI-0159	NI-48
VERSA（12-15）1.6/1.8L	13260+			NI-0190	NI-0329	NI-74
XTERRA(05-14)4.0L	2807		21460EA215	NI-0327	NI-0159	NI-74
NISSAN LIFT				NI-0275	NI-0276	NI-66
NISSAN LIFT				NI-0277	NI-0278	NI-66
NISSAN	1405		2141059Y01	NI-0007	NI-0006	NI-2
NISSAN			2146062J01	NI-0007	NI-0008	NI-3
NISSAN			2146062J01	NI-0007	NI-0008-1	NI-3
NISSAN				NI-0011	NI-0002	NI-4
NISSAN				NI-0011	NI-0004	NI-4
NISSAN				NI-0011	NI-004-1	NI-5
NISSAN				NI-0012	NI-0006	NI-5
NISSAN				NI-0012	NI-0008	NI-5
NISSAN				NI-0012	NI-0008-1	NI-5
NISSAN			2146010V01	NI-0017	NI-0018	NI-6
NISSAN				NI-0019	NI-0018	NI-7
NISSAN				NI-0017	NI-0020	NI-7
NISSAN				NI-0017	NI-0020-1	NI-7
NISSAN				NI-0019	NI-0020	NI-7
NISSAN				NI-0019	NI-0020-1	NI-8
NISSAN				NI-0017	NI-0022	NI-8
NISSAN				NI-0017	NI-0022-1	NI-9
NISSAN				NI-0019	NI-0022	NI-9
NISSAN				NI-0019	NI-0022-1	NI-9
NISSAN				NI-0019	NI-0023	NI-9
NISSAN				NI-0017	NI-0024	NI-10
NISSAN				NI-0017	NI-0025	NI-10
NISSAN				NI-0027	NI-0029	NI-12
NISSAN				NI-0027	NI-0030	NI-12
NISSAN				NI-0027	NI-0033	NI-14
NISSAN				NI-0027	NI-0033-1	NI-14
NISSAN				NI-0027	NI-0034	NI-14
NISSAN				NI-0027	NI-0034-1	NI-14
NISSAN				NI-0035	NI-0033	NI-15
NISSAN				NI-0035	NI-0033-1	NI-15

Model	DPI	NISSENS	OEM	Hongyan		Page
NISSAN				NI-0038	NI-0030	NI-16
NISSAN	2150			NI-0044	NI-0042	NI-18
NISSAN				NI-0048	NI-0049	NI-19
NISSAN				NI-0048	NI-0050	NI-19
NISSAN				NI-0048	NI-0050-1	NI-19
NISSAN				NI-0048	NI-0050-2	NI-19
NISSAN				NI-0051	NI-0049	NI-20
NISSAN				NI-0051	NI-0050	NI-20
NISSAN				NI-0051	NI-0050-1	NI-20
NISSAN				NI-0051	NI-0050-2	NI-20
NISSAN	1442		2140010G10	NI-0054	NI-0055	NI-21
NISSAN			214109C001 +	NI-0072	NI-0073	NI-26
NISSAN			214109C001 +	NI-0072	NI-0073-1	NI-26
NISSAN				NI-0074	NI-0073	NI-26
NISSAN			21460VB000	NI-0077	NI-0078	NI-27
NISSAN				NI-0077	NI-0078-1	NI-27
NISSAN				NI-0079	NI-0078	NI-27
NISSAN				NI-0080	NI-0081	NI-28
NISSAN				NI-0080	NI-0081-1	NI-28
NISSAN				NI-0082	NI-0081	NI-28
NISSAN				NI-0083	NI-0081	NI-28
NISSAN				NI-0084	NI-0081	NI-29
NISSAN			21460ED500	NI-0086	NI-0087	NI-29
NISSAN			21460ED500	NI-0086	NI-0087-1	NI-29
NISSAN			21410JX00A +	NI-0088	NI-0089	NI-30
NISSAN			214603J100 +	NI-0090	NI-0091	NI-30
NISSAN				NI-0090	NI-0091-1	NI-30
NISSAN				NI-0090	NI-0091-2	NI-30
NISSAN				NI-0090	NI-0091-3	NI-31
NISSAN				NI-0090	NI-0092	NI-31
NISSAN				NI-0093	NI-0091	NI-31
NISSAN			214605V203 +	NI-0090	NI-0096	NI-32
NISSAN				NI-0097	NI-0091	NI-32
NISSAN				NI-0097	NI-0092	NI-32
NISSAN				NI-0097	NI-0094	NI-33
NISSAN				NI-0098	NI-0091	NI-33
NISSAN				NI-0099	NI-0091	NI-33
NISSAN			2146031U10 +	NI-0099	NI-0100	NI-33
NISSAN			2146031U10 +	NI-0099	NI-0100-1	NI-34
NISSAN				NI-099-1	NI-0100	NI-34
NISSAN				NI-0102	NI-0091	NI-35
NISSAN			2146035U00	NI-0102	NI-0101	NI-35
NISSAN				NI-0105	NI-0104	NI-36
NISSAN			214606N103	NI-0106	NI-0107	NI-36
NISSAN			214606N103	NI-0106	NI-0107-1	NI-36
NISSAN			21460AU303	NI-0106	NI-0107-2	NI-37
NISSAN				NI-0108	NI-0107-1	NI-37
NISSAN				NI-0108	NI-0107-2	NI-37
NISSAN				NI-0108	NI-0109	NI-38
NISSAN				NI-0108	NI-0109-1	NI-38
NISSAN				NI-0110	NI-0111	NI-38

Model	DPI	NISSENS	OEM	Hongyan		Page
NISSAN				NI-0110	NI-0111-1	NI-38
NISSAN				NI-0113	NI-0114	NI-39
NISSAN				NI-0113	NI-0114-1	NI-39
NISSAN				NI-0115	NI-0114	NI-39
NISSAN			214109F500 +	NI-0116	NI-0117	NI-40
NISSAN				NI-0116	NI-0118	NI-40
NISSAN				NI-0119	NI-0117	NI-40
NISSAN				NI-0120	NI-0118	NI-40
NISSAN			21410BM402 +	NI-0121	NI-0122	NI-41
NISSAN			21410BM402 +	NI-0121	NI-0122-1	NI-41
NISSAN			21410AV600 +	NI-123	NI-124	NI-41
NISSAN			21410AV600 +	NI-123	NI-124-1	NI-41
NISSAN				NI-0125	NI-0124	NI-42
NISSAN				NI-0125	NI-0124-1	NI-42
NISSAN			2140034200 +	NI-0126	NI-0127	NI-42
NISSAN			214101Y105	NI-0130	NI-0131	NI-43
NISSAN				NI-0132	NI-0131	NI-43
NISSAN				NI-0133	NI-0134	NI-43
NISSAN				NI-0133	NI-0135	NI-43
NISSAN			214160EA005	NI-0144	NI-0145	NI-45
NISSAN			2146045B00 +	NI-0144	NI-0146	NI-45
NISSAN				NI-0147	NI-0148	NI-46
NISSAN				NI-0149	NI-0150	NI-46
NISSAN				NI-0151	NI-0152	NI-46
NISSAN				NI-0153	NI-0154-1	NI-47
NISSAN				NI-0155	NI-0154	NI-47
NISSAN				NI-0155	NI-0154-1	NI-47
NISSAN				NI-0156	NI-0157	NI-47
NISSAN				NI-0156	NI-0157-1	NI-48
NISSAN				NI-0156	NI-0157-2	NI-48
NISSAN				NI-0161	NI-0162	NI-49
NISSAN				NI-0163	NI-0164	NI-49
NISSAN				NI-0167	NI-0168	NI-49
NISSAN				NI-0173	NI-0174	NI-50
NISSAN				NI-0181	NI-0182	NI-51
NISSAN				NI-0185	NI-0186	NI-52
NISSAN				NI-0187	NI-0186	NI-52
NISSAN				NI-0196	NI-0197	NI-53
NISSAN				NI-0160	NI-0200	NI-54
NISSAN				NI-0201	NI-0200	NI-54
NISSAN				NI-0202	NI-0203	NI-54
NISSAN				NI-0202	NI-0203-1	NI-54
NISSAN				NI-0202	NI-0204	NI-55
NISSAN				NI-0232	NI-0233	NI-59
NISSAN				NI-0234	NI-0233	NI-60
NISSAN				NI-0235	NI-0236	NI-60
NISSAN				NI-0235	NI-0237	NI-60
NISSAN				NI-0240	NI-0057	NI-61
NISSAN				NI-0251	NI-0252	NI-63
NISSAN				NI-0253	NI-0252	NI-63
NISSAN				NI-0254	NI-0255	NI-63

Model	DPI	NISSENS	OEM	Hongyan		Page
NISSAN				NI-0256	NI-0257	NI-64
NISSAN				NI-0258	NI-0259	NI-64
NISSAN				NI-0260	NI-0261	NI-64
NISSAN				NI-0262	NI-0263	NI-64
NISSAN				NI-0268	NI-0269	NI-65
NISSAN				NI-0270	NI-0271	NI-65
NISSAN				NI-0272	NI-0273	NI-66
NISSAN				NI-0343	NI-0344	NI-77
NISSAN				NI-0345	NI-0346	NI-77
NISSAN				NI-0347	NI-0348	NI-77
NISSAN				NI-0366	NI-0367	NI-80
NISSAN			21410VM50A	NI-0408		NI-87
NISSAN				NI-0323	NI-0324	NI-73
NISSAN				NI-0368	NI-0369	NI-81
NISSAN				NI-0235	NI-0371	NI-81
NISSAN				NI-0372	NI-0028	NI-81
NISSAN				NI-0373	NI-0374	NI-82
NISSAN				NI-0373	NI-0375	NI-82
NISSAN				NI-0376	NI-0030	NI-82
NISSAN				NI-0379	NI-0380	NI-83
NISSAN				NI-0381		NI-83
NISSAN				NI-0383		NI-83
NISSAN				NI-0385		NI-83
NISSAN				NI-0272	NI-0392	NI-84
NISSAN				NI-0395	NI-0396	NI-85
NISSAN				NI-0398		NI-86
NISSAN				NI-0185	NI-0412	NI-87
OPEL						
AGILA(00-) 1.3L		630749	9204617 +	OP-0159	OP-0160	OP-24
AGILA(08-15) 1.2		630706 +	1770073KB0 +	SUZ-0042	SUZ-0043	SUZ-7
ARENA(97-01) 2.5/2.8L		63936A	2140000QAH +	RE-0009	RE-0010	RE-2
ASTRA(91-05) 1.4/1.6L		632761	1300112 +	OP-0078	OP-0079	OP-12
ASTRA(91-05) 1.4/1.6L				OP-0078-1	OP-0079	OP-12
ASTRA(91-05) 1.6/2.0L		63061	1300111 +	OP-0035	OP-0036	OP-5
ASTRA(91-05) 1.4/1.6/1.8/2.0L		63252A	52455010 +	OP-0019	OP-0020	OP-3
ASTRA(98-)1.2L				OP-0144	OP-0145	OP-21
ASTRA(99-05) 1.7L			1300209	OP-0066	OP-0067	OP-10
ASTRA(99-05) 1.7L				OP-0068	OP-0067	OP-10
ASTRA(99-05) 2.0/2.2L		63003A	1300210 +	OP-0062	OP-0063	OP-9
ASTRA(99-05) 2.0/2.2L				OP-0064	OP-0065	OP-9
ASTRA(99-05)2.0/2.2L				OP-0062	OP-0146	OP-21
ASTRA(04-14)1.2/1.4/1.8L				OP-0071	OP-0148	OP-22
ASTRA(05-14) 1.2/1.4/1.8L		63027A	1300265 +	OP-0071	OP-0073	OP-11
ASTRA(05-14) 1.2/1.4/1.8L				OP-0071	OP-0074	OP-11
ASTRA(05-12) 1.3/1.7/1.9L		63029A	1300269 +	OP-0075	OP-0076	OP-11
ASTRA(05-12) 1.3/1.7/1.9L				OP-0075	OP-0077	OP-11
ASTRA(05-12) 1.6L		63028A	1300266 +	OP-0071	OP-0072	OP-10
ASTRA(12-15) 1.6L		630762	1300338 +	OP-0117	OP-0118	OP-17
CALIBRA(90-97) 1.6L		630631	52455192 +	OP-0013	OP-0015	OP-2
CALIBRA(90-97) 1.6L				OP-0013	OP-0014	OP-2

Model	DPI	NISSENS	OEM	Hongyan		Page
CASCADA(13-15) 1.6L		630762	1300338 +	OP-0117	OP-0118	OP-17
CELTA（06-）			9333757415	OP-0138	OP-0139	OP-20
CELLA（06-）				OP-0140	OP-0141	OP-21
COMBO(94-01) 1.2/1.4L		632851	1300149 +	OP-0045	OP-0046	OP-6
COMBO(94-01) 1.2/1.4L				OP-0092	OP-0093	OP-14
COMBO(94-01) 1.2/1.4L				OP-0094	OP-0095	OP-14
COMBO(94-01) 1.2/1.6L		63254A	1300152 +	GM-0001	OP-0018	OP-3
COMBO(94-01) 1.2/1.6L				OP-0016	OP-0017	OP-3
COMBO(94-01) 1.5/1.7L		63286A +	1300151 +	OP-0041	OP-0042	OP-6
COMBO(00-) 1.2L			13200236	OP-0027	OP-0028	OP-4
COMBO(00-) 1.2L			13200237	OP-0029	OP-0030	OP-4
COMBO(00-)1.4L		63008	1300237	OP-0049	OP-0050	OP-7
COMBO(00-)1.4L				OP-0049	OP-0051	OP-7
COMBO(00-)1.4L		63008	1300237	OP-0052	OP-0053	OP-7
COMBO(00-)1.4L				OP-0052	OP-0054	OP-8
COMBO(00-)1.4L		63007	1300236	OP-0055	OP-0056	OP-8
COMBO(00-)1.4L				OP-0055	OP-0057	OP-8
COMBO(00-)1.4L				OP-0058	OP-0059	OP-8
COMBO(00-)1.4L				OP-0058	OP-0060	OP-9
COMBO(00-)1.4L				OP-0058	OP-0061	OP-9
COMBO(00-10) 1.3/1.7L		63094	1300259 +	OP-0039	OP-0040	OP-6
COMBO(01-06) 1.7L		63009A	1300233 +	OP-0037	OP-0038	OP-5
COMBO(12-15)		617854	1300328 +	OP-0113	OP-0114	OP-17
CORSA(93-00) 1.2/1.4L		632851	1300149 +	OP-0045	OP-0046	OP-6
CORSA(93-00) 1.2/1.4L				OP-0092	OP-0093	OP-14
CORSA(93-00) 1.2/1.4L				OP-0094	OP-0095	OP-14
CORSA(93-04) 1.4/1.6L		63254A	1300152 +	GM-0001	OP-0018	OP-3
CORSA(93-04) 1.4/1.6L				OP-0016	OP-0017	OP-3
CORSA(93-00) 1.5/1.7L		63286A +	1300151 +	OP-0041	OP-0042	OP-6
CORSA(00-) 1.0/1.2/1.4/1.6L			13200236	OP-0027	OP-0028	OP-4
CORSA(00-) 1.0/1.2/1.4/1.6L			13200237	OP-0029	OP-0030	OP-4
CORSA(00-) 1.4/1.8L		63008	1300237	OP-0049	OP-0050	OP-7
CORSA(00-) 1.4/1.8L				OP-0049	OP-0051	OP-7
CORSA(00-) 1.4/1.8L		63008	1300237	OP-0052	OP-0053	OP-7
CORSA(00-) 1.4/1.8L				OP-0052	OP-0054	OP-8
CORSA(00-) 1.4/1.8L		63007	1300236	OP-0055	OP-0056	OP-8
CORSA(00-) 1.4/1.8L				OP-0055	OP-0057	OP-8
CORSA(00-) 1.4/1.8L				OP-0058	OP-0059	OP-8
CORSA(00-) 1.4/1.8L				OP-0058	OP-0060	OP-9
CORSA(00-) 1.4/1.8L				OP-0058	OP-0061	OP-9
CORSA(00-09) 1.7L		63009A	1300233 +	OP-0037	OP-0038	OP-5
CORSA(01-11) 1.3L		61915	1300297 +	OP-0115	OP-0116	OP-17
CORSA(03-10) 1.3/1.7L		63094	1300259 +	OP-0039	OP-0040	OP-6
CORSA(06-15) 1.0/1.2/1.4/1.6L		61918	1300279 +	OP-0096	OP-0097	OP-14
CORSA(06-15) 1.0/1.2/1.4/1.6L		61918	1300279 +	OP-0096	OP-0098	OP-14
CORSA(06-15) 1.0/1.2/1.4/1.6L				OP-0099	OP-0100	OP-15
CORSA(93-）		63297 +	1300292/205 +	OP-0123	OP-0124	OP-18
CORSA(14-）		630783	1300363	OP-0132	OP-0133	OP-19
CORSA(14-）		630785	1300368	OP-0132	OP-0134	OP-20
CORSA(14-）		630786	1300361	OP-0132	OP-0135	OP-20
FRONTERA(92-)2.0/2.4L		63244 +	1300119 +	OP-0136	OP-0137	OP-20

Model	DPI	NISSENS	OEM	Hongyan		Page
INSIGNIA(13-15) 1.6L		630762	1300338 +	OP-0117	OP-0118	OP-17
MERIVA(03-10) 1.4/1.6/1.8L		63086A	1300252 +	OP-0106	OP-0108	OP-16
MERIVA(03-10) 1.7L		63087A	1300254 +	OP-0106	OP-0107	OP-16
MERIVA(03-10) 1.7L				OP-0106	OP-0109	OP-16
MERIVA(03-10) 1.7L				OP-0106	OP-0110	OP-16
MERIVA(03-)1.3L			1300260	OP-0146	OP-0147	OP-22
MERIVA（03-）1.3L			1300260	OP-0147	OP-0148	OP-21
MOVANO(98-03) 2.5/2.8L		63936A	2140000QAH +	RE-0009	RE-0010	RE-2
MOVANO(98-)1.9/2.2/2.5L				OP-0129	OP-0130	OP-19
MOVANO(98-)1.9/2.2/2.5L		63819 +	4415064/6/8 +	OP-0131	OP-0130	OP-19
OMEGA(86-93)1.8L			90231318	OP-0125	OP-0126	OP-18
OMEGA(86-93)1.8L			90280692 +	OP-0127	OP-0128	OP-19
OMEGA(86-94) 2.5/2.6/3.0L			90231320	OP-0023		OP-4
OMEGA(87-94) 2.6/3.0L		63049	130095	OP-0021	OP-0022	OP-3
OMEGA(94-00) 2.0L		63071	6302008 +	OP-0069		OP-10
OMEGA(94-03) 2.0/2.5/3.0L		63072A	1300165 +	OP-0003	OP-0004	OP-1
OMEGA(94-03) 2.5/3.0L		63073A	52482600 +	OP-0001	OP-0002	OP-1
OMEGA(95-98) 3.0L				OP-0103	OP-0104	OP-15
OMEGA(95-98) 3.0L				OP-0105	OP-0104	OP-15
OMEGA				OP-0082	OP-0083	OP-12
VECTRA(88-95) 1.6/1.8/2.0L		630631	52455192 +	OP-0013	OP-0015	OP-2
VECTRA(88-95) 1.6/1.8/2.0L				OP-0013	OP-0014	OP-2
VECTRA(88-95) 1.7/1.8/2.0L		630551	1300084 +	OP-0047	OP-0048	OP-7
VECTRA(92-98) 1.4/1.6L			90264491	OP-0043	OP-0044	OP-6
VECTRA(95-03) 1.6/1.8/2.0/2.2L		630121	1300180 +	OP-0005	OP-0006	OP-1
VECTRA(95-03) 1.6/1.8/2.0/2.2L				OP-0009	OP-0010	OP-2
VECTRA(95-03) 1.6/1.8/2.0L		630681	90528302	OP-0031	OP-0032	OP-5
VECTRA(95-03) 2.5L		63013A	1300181	OP-0007	OP-0008	OP-1
VECTRA(95-03) 2.5L				OP-0011	OP-0012	OP-2
VECTRA(03-08) 2.2/3.2L	2810	63023A	1300247 +	OP-0119	OP-0120	OP-18
VECTRA(03-08)2.2/3.2L	2810	63023A	12805057 +	OP-0119	OP-0120	OP-18
VIVARO(01-11) 1.9/2.0L		63025A	91166000 +	RE-0085	RE-0086	RE-12
VIVARO(06-11)		63124		RE-0083	RE-0084	RE-12
SENATOR(87-93) 2.5/2.6/3.0L			90231320	OP-0023		OP-4
SIGNUM(03-08) 1.8L		63024A	1300244 +	OP-0111	OP-0112	OP-17
SIGNUM(03-08) 2.0/2.2/3.2L	2810	63023A	1300247 +	OP-0119	OP-0120	OP-18
SIGNUM(03-08)2.0/2.2/3.2L	2810	63023A	12805057 +	OP-0119	OP-0120	OP-18
TIGRA(94-00) 1.4/1.6L		63254A	1300152 +	GM-0001	OP-0018	OP-3
TIGRA(94-00) 1.4/1.6L				OP-0016	OP-0017	OP-3
TIGRA(04-) 1.4L			13200236	OP-0027	OP-0028	OP-4
TIGRA(04-) 1.4L			13200237	OP-0029	OP-0030	OP-4
TIGRA(04-) 1.8L		63008	1300237	OP-0049	OP-0050	OP-7
TIGRA(04-) 1.8L				OP-0049	OP-0051	OP-7
TIGRA(04-) 1.8L		63008	1300237	OP-0052	OP-0053	OP-7
TIGRA(04-) 1.8L				OP-0052	OP-0054	OP-8
TIGRA(04-) 1.8L		63007	1300236	OP-0055	OP-0056	OP-8
TIGRA(04-) 1.8L				OP-0055	OP-0057	OP-8
TIGRA(04-) 1.8L				OP-0058	OP-0059	OP-8
TIGRA(04-) 1.8L				OP-0058	OP-0060	OP-9
TIGRA(04-) 1.8L				OP-0058	OP-0061	OP-9
TIGRA(04-09) 1.3L		63094	1300259 +	OP-0039	OP-0040	OP-6

Model	DPI	NISSENS	OEM	Hongyan		Page
VECTRA(02-10) 1.8L		63024A	1300244 +	OP-0111	OP-0112	OP-17
VITA(93-00) 1.2/1.4L		632851	1300149 +	OP-0045	OP-0046	OP-6
VITA(93-00) 1.5/1.7L		63286A +	1300151 +	OP-0041	OP-0042	OP-6
VITA(00-04) 1.7L		63009A	1300233 +	OP-0037	OP-0038	OP-5
VITA(01-04) 1.3L		63094	1300259 +	OP-0039	OP-0040	OP-6
ZAFIRA(00-05) 2.0/2.2L		63003A	1300210 +	OP-0062	OP-0063	OP-9
ZAFIRA(00-05) 2.0/2.2L				OP-0064	OP-0065	OP-9
ZAFIRA(00-05)2.0/2.2L				OP-0062	OP-0146	OP-21
ZAFIRA(05-15) 1.6/1.8L		63028A	1300266 +	OP-0071	OP-0072	OP-10
ZAFIRA(06-11) 1.6L		63027A	1300265 +	OP-0071	OP-0073	OP-11
ZAFIRA(06-11) 1.6L				OP-0071	OP-0074	OP-11
ZAFIRA(06-11)1.6L				OP-0071	OP-0148	OP-22
ZAFIRA(06-13) 1.7/1.9L		63029A	1300269 +	OP-0075	OP-0076	OP-11
ZAFIRA(06-13) 1.7/1.9L				OP-0075	OP-0077	OP-11
ZAFIRA(13-15) 1.6L		630762	1300338 +	OP-0117	OP-0118	OP-17
ZAFIRA（05-） 1.9L				OP-0142	OP-0143	OP-21
OPEL				OP-0025		OP-4
OPEL				OP-0033	OP-0034	OP-5
OPEL				OP-0080	OP-0081	OP-12
OPEL				OP-0084	OP-0085	OP-13
OPEL				OP-0086	OP-0087	OP-13
OPEL				OP-0088	OP-0089	OP-13
OPEL				OP-0090	OP-0091	OP-13
OPEL				OP-0101	OP-0102	OP-15
OPEL				OP-0121	OP-0122	OP-18
OPEL				OP-0149	OP-0150	OP-22
OPEL				OP-0149	OP-0151	OP-22
OPEL				OP-0119	OP-0152	OP-23
OPEL			1300197 +	OP-0153	OP-0154	OP-23
OPEL				OP-0155	OP-0156	OP-23
OPEL				OP-0157		OP-23
OPEL		630749	9204617 +	OP-0159	OP-0160	OP-24
PEUGEOT						
1007(05-10) 1.4/1.6L		61284	1330C0 +	PE-0053	PE-0054	PE-10
1007(05-10) 1.4/1.6L		61278	1330E6 +	PE-0053	PE-0055	PE-10
205(83-99) 1.3/1.4/1.6L		63709	1300K6 +	PE-0064	PE-0065	PE-12
205983-99) 1.9L		63729A	1300K5 +	PE-0066	PE-0067	PE-12
206(98-12) 1.1/1.4/1.6L		63708A	133037 +	PE-0046	PE-0047	PE-9
206(98-13) 1.4/1.6/1.9/2.0L		63502	132322 +	PE-0004	PE-0005	PE-1
206(98-13) 1.4/1.6/1.9/2.0L				PE-0001	PE-0002	PE-1
206(98-13) 1.4/1.6/1.9/2.0L				PE-0001	PE-0003	PE-1
206(98-13) 1.4/1.6/1.9/2.0L				PE-0006	PE-0002	PE-1
206(98-13) 1.4/1.6/1.9/2.0L				PE-0007	PE-0008	PE-2
206(98-13) 1.4/1.6/1.9/2.0L				PE-0009	PE-0010	PE-2
206(98-13) 1.4/1.6/1.9/2.0L		63694A	133096 +	PE-0009	PE-0011	PE-2
206(98-13) 1.4/1.6/1.9/2.0L			133084	PE-0012	PE-0011	PE-2
206(98-13) 1.4/1.6/1.9/2.0L				PE-0012	PE-0013	PE-3
206(98-13) 1.4/1.6/1.9/2.0L				PE-0012	PE-0014	PE-3
207(06-14) 1.4/1.6L		61284	1330C0 +	PE-0053	PE-0054	PE-10
307(09-15）				PE-0088	PE-0043	PE-15

Model	DPI	NISSENS	OEM	Hongyan		Page
307(09-15)				PE-0041	PE-0089	PE-15
308(07-15)				PE-0088	PE-0043	PE-15
308(07-15)				PE-0041	PE-0089	PE-15
407(04-15)				PE-0088	PE-0043	PE-15
407(04-15)				PE-0041	PE-0089	PE-15
3008(09-15)		63606A	133089 +	PE-0041	PE-0042	PE-8
3008(09-15)				PE-0041	PE-0043	PE-8
3008(09-15)				PE-0088	PE-0043	PE-15
3008(09-15)				PE-0041	PE-0089	PE-15
306(97-02) 1.8/1.9/2.0L		61315	133041 +	PE-0039	PE-0040	PE-8
307(00-12) 1.4/1.6/1.9/2.0L		63502	132322 +	PE-0004	PE-0005	PE-1
307(00-12) 1.4/1.6/1.9/2.0L				PE-0001	PE-0002	PE-1
307(00-12) 1.4/1.6/1.9/2.0L				PE-0001	PE-0003	PE-1
307(00-12) 1.4/1.6/1.9/2.0L				PE-0006	PE-0002	PE-1
307(00-12) 1.4/1.6/1.9/2.0L				PE-0007	PE-0008	PE-2
307(00-12) 1.4/1.6/1.9/2.0L				PE-0009	PE-0010	PE-2
307(00-12) 1.4/1.6/1.9/2.0L				PE-0009	PE-0011	PE-2
307(00-12) 1.4/1.6/1.9/2.0L				PE-0012	PE-0011	PE-2
307(00-12) 1.4/1.6/1.9/2.0L				PE-0012	PE-0013	PE-3
307(00-12) 1.4/1.6/1.9/2.0L				PE-0012	PE-0014	PE-3
307(03-11)		63606A	133089 +	PE-0041	PE-0042	PE-8
307(03-11)				PE-0041	PE-0043	PE-8
307(05-13)		63601	1330K1 +	PE-0044	PE-0045	PE-9
308(07-15)		63606A	133089 +	PE-0041	PE-0042	PE-8
308(07-15)				PE-0041	PE-0043	PE-8
308(08-13)		63601	1330K1 +	PE-0044	PE-0045	PE-9
405(92-99) 1.6/1.8/2.0L		63514	1301G7	PE-0029	PE-0030	PE-6
405(92-97) 2.0L		63545	1301JL +	PE-0029	PE-0031	PE-6
405(92-97) 1.6/1.8/2.0L			1301G8	PE-0032	PE-0033	PE-7
405(92-97) 1.6/1.8/2.0L				PE-0032	PE-0034	PE-7
405(92-97) 1.6/1.8/2.0L		63524	1301E6 +	PE-0032	PE-0035	PE-7
405(92-97) 1.6/1.8/2.0L				PE-0032	PE-0036	PE-7
405(92-99) 1.6/1.8/2.0L				PE-0029	PE-0085	PE-14
405(92-)				PE-0086	PE-0087	PE-15
406(99-04) 1.8L		61291A	133068 +	PE-0015	PE-0016	PE-3
406(99-04) 1.8L				PE-0017	PE-0016	PE-3
406(99-04) 2.0L		61292A		PE-0015	PE-0018	PE-4
406(99-04) 2.0L				PE-0015	PE-0019	PE-4
406(99-04) 2.0L				PE-0015	PE-0020	PE-4
406(99-04) 2.0L		63705A +	133063 +	PE-0021	PE-0022	PE-4
406(99-04) 2.0L				PE-0021	PE-0023	PE-5
406(99-04) 2.0L				PE-0021	PE-0024	PE-5
406(99-04) 2.0L				PE-0021	PE-0025	PE-5
406(99-04) 2.0L				PE-0021	PE-0026	PE-5
406(99-04) 2.0L				PE-0057	PE-0058	PE-11
406(99-04) 2.0L				PE-0059	PE-0060	PE-11
406(99-04) 2.0L				PE-0061	PE-0062	PE-11
406(99-04) 2.0L				PE-0061	PE-0063	PE-11
407(04-15)		63606A	133089 +	PE-0041	PE-0042	PE-8
407(04-15)				PE-0041	PE-0043	PE-8
407(09-14)		636008 +	1330W5 +	PE-0068	PE-0069	PE-12

Model	DPI	NISSENS	OEM	Hongyan		Page
407(09-14）						
508(10-15)		636008 +	1330W5 +	PE-0068	PE-0069	PE-12
508(10-15)		636008 +	1330W5 +	PE-0078	PE-0069	PE-13
607(00-05) 2.0L		63705A +	133063 +	PE-0021	PE-0022	PE-4
607(00-05) 2.0L				PE-0021	PE-0023	PE-5
607(00-05) 2.0L				PE-0021	PE-0024	PE-5
607(00-05) 2.0L				PE-0021	PE-0025	PE-5
607(00-05) 2.0L				PE-0021	PE-0026	PE-5
607(00-05) 2.2L		61295A		PE-0027	PE-0018	PE-6
607(00-10) 2.2L		61294A	133078 +	PE-0027	PE-0028	PE-6
806(94-02) 1.8/2.0L		61875A	1301P2 +	PE-0037	PE-0038	PE-8
BOXER(04-) 2.0L		61862	1330V9 +	FI-0031	FI-0032	FI-5
BOXER(04-) 1.9/2.0/2.5/2.8L		61390A +	1330L2 +	FI-0031	FI-0033	FI-5
BOXER(06-) 2.2/3.0L		63555A	1342588080 +	FI-0058	FI-0059	FI-9
EXPERT(96-07) 1.6/1.8/2.0L		61875A	1301P2 +	PE-0037	PE-0038	PE-8
EXPERT(11-14)		63606A	133089 +	PE-0041	PE-0042	PE-8
EXPERT(11-14)				PE-0041	PE-0043	PE-8
EXPERT(11-14)				PE-0088	PE-0043	PE-15
EXPERT(11-14)				PE-0041	PE-0089	PE-15
GRAND RAID(02-06) 1.4/1.6/1.9/2.0L		63502	132322 +	PE-0004	PE-0005	PE-1
PARTNER(98-02) 1.8/1.9/2.0L		61315	133041 +	PE-0039	PE-0040	PE-8
PARTNER(02-13) 1.4/1.6/1.9/2.0L		63502	132322 +	PE-0004	PE-0005	PE-1
PEUGEOT				PE-0048	PE-0049	PE-9
PEUGEOT				PE-0050	PE-0051	PE-9
PEUGEOT				PE-0050	PE-0052	PE-10
PEUGEOT				PE-0070	PE-0071	PE-12
PEUGEOT				PE-0072	PE-0073	PE-13
PEUGEOT				PE-0074	PE-0075	PE-13
PEUGEOT				PE-0076	PE-0077	PE-13
PEUGEOT				PE-0079	PE-0080	PE-14
PEUGEOT				PE-0081		PE-14
PEUGEOT		61296 +	133080/81 +		PE-0084	PE-14
PEUGEOT				PE-0090	PE-0091	PE-15
PEUGEOT				PE-0092		RE-16
PORSCHE						
944(83-87) 2.5L	490 +	63756 +		PO-0003	PO-0004	PO-1
CAYENNE(04-10) 3.2/3.6L	2756 +		7L0121253/A +	AU-0036	AU-0037	AU-7
CAYENNE(04-10) 3.2/3.6L		65276A		AU-0038	AU-0039	AU-7
CAYENNE(10-15) 3.0/3.6L		65297	7P0121253A +	VW-0097	VW-0098	VW-16
CAYENNE(10-15) 3.0/3.6L				VW-0099	VW-0100	VW-16
PANAMERA(09-15) 3.0/3.6/4.8L		63779		PO-0001	PO-0002	PO-1
RENAULT						
AVANTIME(01-03) 1.8/2.0/2.2L		63851A	7701038219 +	RE-0107	RE-0108	RE-15
CAPTUR(13-15) 1.5L		637624	214100078R	RE-0079	RE-0080	RE-12
CLIO(88-96) 1.2/1.4L			7701034768	RE-0048	RE-0049	RE-7
CLIO(88-96) 1.2/1.4L			7701034768	RE-0050	RE-0049	RE-7
CLIO(88-96) 1.2/1.4L			7701034768	RE-0051	RE-0049	RE-8
CLIO(88-96) 1.2/1.4L				RE-0052	RE-0053	RE-8
CLIO(88-96) 1.2/1.4L				RE-0052	RE-0054	RE-8

Model	DPI	NISSENS	OEM	Hongyan		Page
CLIO(90-98) 1.1L			7701034767	RE-0036	RE-0037	RE-5
CLIO(90-98) 1.2/1.4L		63968A	7700806575	RE-0071	RE-0072	RE-11
CLIO(90-98) 1.4L		63924	7700786444 +	RE-0013	RE-0014	RE-2
CLIO(91-98) 1.9L		63946		RE-0096	RE-0097	RE-14
CLIO(91-98) 1.8L		63878	7700803753	RE-0017	RE-0018	RE-3
CLIO(91-98) 1.8L				RE-0019	RE-0020	RE-3
CLIO(95-02) 1.2/1.6/1.6L			7700838134	RE-0026	RE-0027	RE-4
CLIO(95-02) 1.2/1.6/1.6L				RE-0028	RE-0027	RE-4
CLIO(95-02) 1.2/1.6/1.6L				RE-0029	RE-0030	RE-4
CLIO(95-02) 1.2/1.6/1.6L				RE-0031	RE-0032	RE-5
CLIO(98-01) 1.2/1.4L		63886	7700430143	RE-0033	RE-0034	RE-5
CLIO(98-01) 1.2/1.4L				RE-0033	RE-0035	RE-5
CLIO(98-) 1.9L			7700417175 +	RE-0011	RE-0012	RE-2
CLIO(98-) 1.9L			7700836304	RE-0021	RE-0022	RE-3
CLIO(98-) 1.9L				RE-0021	RE-0023	RE-3
CLIO(99-09) 1.2L		638081	7700430784 +	RE-0057	RE-0058	RE-9
CLIO(99-09) 1.2L				RE-0059	RE-0060	RE-9
CLIO(99-09) 1.2L				RE-0061	RE-0062	RE-9
CLIO(99-09) 1.2L				RE-0063	RE-0062	RE-9
CLIO(01-08) 1.5/1.6L		67246	7700436916 +	RE-0101	RE-0102	RE-15
CLIO(05-13)		67284	8200489879	RE-0116	RE-0118	RE-17
CLIO(05-15)		67283	8200468913 +	RE-0116	RE-0117	RE-17
CLIO(12-15) 1.5L		637624	214100078R	RE-0079	RE-0080	RE-12
DUSTER(12-15) 1.6/2.0L		637612	8200735039	RE-0075	RE-0076	RE-11
DUSTER(12-15) 1.6/2.0L		637613	214100598R +	RE-0077	RE-0078	RE-11
DUSTER(13-15) 1.2/1.5L		637624	214100078R	RE-0079	RE-0080	RE-12
EXPRESS(85-)			7700757930	RE-0055	RE-0056	RE-8
EXPRESS(91-) 1.9L			60060000712	RE-0069	RE-0070	RE-10
EXTRA (85-)			7700757930	RE-0055	RE-0056	RE-8
EXTRA(91-) 1.9L			60060000712	RE-0069	RE-0070	RE-10
EXTRA(91-98) 1.2/1.4L		63968A	7700806575	RE-0071	RE-0072	RE-11
EXTRA(91-98) 1.4L		63924	7700786444 +	RE-0013	RE-0014	RE-2
ESPACE(89-96) 2.0/2.2L			7700795175	RE-0045	RE-0046	RE-7
ESPACE(89-96) 2.0/2.2L			7700795175	RE-0045	RE-0047	RE-7
ESPACE(96-02) 1.8/2.0L		63832	77010382377 +	RE-0067	RE-0068	RE-10
ESPACE(96-02) 1.8/2.0/2.2L		63851A	7701038219 +	RE-0107	RE-0108	RE-15
ESPACE(02-10) 1.9/2.0L		63816	8200008765 +	RE-0073	RE-0074	RE-11
FLUENCE(10-15)		637607	214100016R	RE-0111	RE-0113	RE-16
FLUENCE(10-15)		637606	214100014R +	RE-0114	RE-0115	RE-16
FLUENCE（08-）1.5L				RE-0130	RE-0131	RE-19
GRAN TOUT(08-14)		637606	214100014R +	RE-0114	RE-0115	RE-16
GRAND SCENIC(04-11)		63765A	7711135784 +	RE-0119	RE-0120	RE-17
GRAND SCENIC(09-14)		637606	214100014R +	RE-0114	RE-0115	RE-16
KADJAR(15-)1.6L		637664	214101809R	RE-0148	RE-0149	RE-21
KADJAR(15-)1.6L				RE-0150	RE-0151	RE-21
KANGOO(95-02) 1.2/1.6/1.6L			7700838134	RE-0026	RE-0027	RE-4
KANGOO(95-02) 1.2/1.6/1.6L				RE-0028	RE-0027	RE-4
KANGOO(95-02) 1.2/1.6/1.6L				RE-0029	RE-0030	RE-4
KANGOO(95-02) 1.2/1.6/1.6L				RE-0031	RE-0032	RE-5
KANGOO(97-01) 1.2/1.4L		63886	7700430143	RE-0033	RE-0034	RE-5
KANGOO(97-01) 1.2/1.4L				RE-0033	RE-0035	RE-5

Model	DPI	NISSENS	OEM	Hongyan		Page
KANGOO(97-)			7700301171	RE-0064	RE-0065	RE-10
KANGOO(97-)				RE-0066	RE-0065	RE-10
KANGOO(00-02) 1.2L		638081	7700430784 +	RE-0057	RE-0058	RE-9
KANGOO(00-02) 1.2L				RE-0059	RE-0060	RE-9
KANGOO(00-02) 1.2L				RE-0061	RE-0062	RE-9
KANGOO(00-02) 1.2L				RE-0063	RE-0062	RE-9
KANGOO(03-08) 1.5L		63763	8200072712/3	RE-0092	RE-0093	RE-13
KANGOO(03-08)				RE-0094	RE-0095	RE-14
KANGOO(08-）11 1.5L				RE-0132	RE-0133	RE-19
KANGOO(08-）11 1.5L				RE-0134	RE-0135	RE-19
KANGOO(08-）1.6L				RE-0136	RE-0137	RE-19
KANGOO(08-）1.6L				RE-0138	RE-0139	RE-20
KOLEOS(08-) 2.0L				RE-0103	RE-0104	RE-15
KOLEOS(08-) 2.5L				RE-0105	RE-0106	RE-15
LAGUNA(93-01) 1.8/2.0L		63832	77010382377 +	RE-0067	RE-0068	RE-10
LAGUNA(94-01) 1.8/2.0/2.2L		63851A	7701038219 +	RE-0107	RE-0108	RE-15
LAGUNA(01-10) 1.9/2.0L		63816	8200008765 +	RE-0073	RE-0074	RE-11
LAGUNA(07)		637604		RE-0126	RE-0127	RE-18
LATITUDE(11-)		637604		RE-0126	RE-0127	RE-18
LOGAN(08-12) 1.2/1.4/1.6L		637612	8200735039	RE-0075	RE-0076	RE-11
LOGAN(08-12) 1.2/1.4/1.6L		637613	214100598R +	RE-0077	RE-0078	RE-11
MASTER(98-03) 1.9L			7701046210	RE-0007	RE-0008	RE-1
MASTER(98-03) 2.8L		63936A	2140000QAH +	RE-0009	RE-0010	RE-2
MASTER(10-)		630732		RE-0121	RE-0122	RE-17
MASTER(10-)		630733		RE-0123	RE-0124	RE-18
MASTER(10-)				RE-0125	RE-0124	RE-18
MEGANE(95-96)1.6/1.9/2.0L		639391	7700838135 +	RE-0026	RE-0160	RE-22
MEGANE(95-02) 1.2/1.6/1.6L			7700838134	RE-0026	RE-0027	RE-4
MEGANE(95-02) 1.2/1.6/1.6L				RE-0028	RE-0027	RE-4
MEGANE(95-02) 1.2/1.6/1.6L				RE-0029	RE-0030	RE-4
MEGANE(95-02) 1.2/1.6/1.6L				RE-0031	RE-0032	RE-5
MEGANE(96-03) 1.6L		63896A	7700425842 +	RE-0038	RE-0039	RE-6
MEGANE(96-03) 1.6L				RE-0040	RE-0039	RE-6
MEGANE(96-03) 1.6L				RE-0041	RE-0042	RE-6
MEGANE(96-03) 1.6L				RE-0043	RE-0044	RE-6
MEGANE(98-) 1.9L				RE-0024	RE-0025	RE-4
MEGANE(02-13)		63765A	7711135784 +	RE-0119	RE-0120	RE-17
MEGANE(08-15)		637617	214100057R	RE-0111	RE-0112	RE-16
MEGANE(08-15)		637607	214100016R	RE-0111	RE-0113	RE-16
MEGANE(08-15)		637606	214100014R +	RE-0114	RE-0115	RE-16
MEGANE(15-)		606472	606472	RE-0161	RE-0162	RE-23
MEGANE(15-)		606472	214108607R	RE-0163	RE-0164	RE-23
MEGANE(15-)		606473	214105196R	RE-0165	RE-0166	RE-23
MODUS(04-15)		67283	8200468913 +	RE-0116	RE-0117	RE-17
R12(69-81)				RE-0098	RE-0099	RE-14
R12(69-81)				RE-0098	RE-0100	RE-14
R19(88-96) 1.2/1.4L			7701034768	RE-0048	RE-0049	RE-7
R19(88-96) 1.2/1.4L			7701034768	RE-0050	RE-0049	RE-7
R19(88-96) 1.2/1.4L			7701034768	RE-0051	RE-0049	RE-8
R19(88-96) 1.2/1.4L				RE-0052	RE-0053	RE-8
R19(88-96) 1.2/1.4L				RE-0052	RE-0054	RE-8

Model	DPI	NISSENS	OEM	Hongyan		Page
R19(89-01) 1.4/1.7L		63924	7700786444 +	RE-0013	RE-0014	RE-2
R19(90-98) 1.2L			7701034767	RE-0036	RE-0037	RE-5
R21(89-96) 2.0/2.2L			7700795175	RE-0045	RE-0046	RE-7
R21(89-96) 2.0/2.2L			7700795175	RE-0045	RE-0047	RE-7
RAPID(85-)			7700757930	RE-0055	RE-0056	RE-8
RAPID(91-) 1.9L			60060000712	RE-0069	RE-0070	RE-10
SANDERO(07-15) 1.4/1.5L		637612	8200735039	RE-0075	RE-0076	RE-11
SANDERO(08-) 1.2L		637609	8200735038	RE-0081	RE-0082	RE-12
SCENIC(99-03) 1.6L		63896A	7700425842 +	RE-0038	RE-0039	RE-6
SCENIC(99-03) 1.6L				RE-0040	RE-0039	RE-6
SCENIC(99-03) 1.6L				RE-0041	RE-0042	RE-6
SCENIC(99-03) 1.6L				RE-0043	RE-0044	RE-6
SCENIC(03-12)		63765A	7711135784 +	RE-0119	RE-0120	RE-17
SCENIC(09-15) 1.4/1.5/1.6L		637608	214100002R	RE-0109	RE-0110	RE-16
SYMBOL（13-）			214100078R +	RE-0128	RE-0129	RE-18
TONDAR(07-15) 1.4/1.5L		637613	214100598R +	RE-0077	RE-0078	RE-11
TRAFIC(01-06) 1.9/2.0L		63025A	91166000 +	RE-0085	RE-0086	RE-12
TRAFIC(06-11)		63124		RE-0083	RE-0084	RE-12
TRAFIC(01-)2.0L	63122		8200411166 +	RE-0156	RE-0157	RE-22
TWINGO(93-96) 1.0L		63856	7701042436	RE-0001	RE-0002	RE-1
TWINGO(93-96) 1.2L		63949	7701036152 +	RE-0003	RE-0004	RE-1
TWINGO(93-96) 1.2L				RE-0005	RE-0006	RE-1
TWINGO(93-96) 1.2L			7701042415	RE-0089	RE-0090	RE-13
TWINGO(93-96) 1.2L				RE-0089	RE-0091	RE-13
TWINGO（14-）		637662	214105514R	RE-0152	RE-0153	RE-21
TWINGO（14-）		637659	214101206R	RE-0154	RE-0155	RE-22
TWINGO（14-）			144610515R	RE-0158	RE-0159	RE-22
VIVARO(01-)2.0L	63122		8200411166 +	RE-0156	RE-0157	RE-22
VEL SATIS(02-10) 1.9/2.0L		63816	8200008765 +	RE-0073	RE-0074	RE-11
RENAULT				RE-0015	RE-0016	RE-2
RENAULT		63797		RE-0087	RE-0088	RE-13
RENAULT				RE-0140	RE-0141	RE-20
RENAULT				RE-0142	RE-0143	RE-20
RENAULT				RE-0144	RE-0145	RE-20
RENAULT				RE-0146	RE-0147	RE-21
ROEWE						
ROEWE 350				RW-0005	RW-0006	RW-1
ROEWE 550				RW-0001	RW-0002	RW-1
ROEWE 750				RW-0003	RW-0004	RW-1
ROEWE W5 1.8L				RW-0009	RW-0010	RW-2
ROEWE W5 3.2L				RW-0007	RW-0008	RW-1
SAAB						
900(91-98) 2.1/2.3L	2080 +	64034A +	4283438 +	SA-0001	SA-0002	SA-1
9-2X(05-06) 2.0/2.5L	2703 +	67708	45111FE050 +	SU-0004	SU-0002	SU-1
9-2X(05-06) 2.0/2.5L				SU-0006	SU-0007	SU-2
9-3(99-03) 2.0L	2080 +	64034A +	4283438 +	SA-0001	SA-0002	SA-1
9-3(03-08)2.0L/02-15 SAAB 9-3X 2.0L	2810	63023A	12805057 +	OP-0119	OP-0120	OP-18
9-3X(02-15) 2.0L	2810	63023A	1300247 +	OP-0119	OP-0120	OP-18
9-3X(02-15)2.0L	2810	63023A	12805057 +	OP-0119	OP-0120	OP-18

Model	DPI	NISSENS	OEM	Hongyan		Page
9-4X(11-)3.0L	13240			FO-0347	FO-0348	FO-55
9-4X(11-)3.0L	13240			FO-0349	FO-0348	FO-55
9-7X(05-09) 4.2L	2458		52485546	GM-0069	GM-0070	GM-16
9-7X(05-09) 5.3L	2563		15162213	GM-0071	GM-0072	GM-16
9-7X(08-09) 6.0L	2714			GM-0146	GM-0112	GM-27
SCION						
XA (04-06)1.5L	2304 +	64798 +	1640021070 +	TO-0287	TO-0288	TO-53
XA (04-06)1.5L				TO-0289	TO-0290	TO-54
XA(04-06)1.5L	2304 +	64798 +	1640021080 +	TO-0869	TO-0288	TO-145
XD(08-14) 1.8L	2890 +		1640021270 +	TO-0295	TO-0296	TO-54
XB(08-14) 2.4L	13001		1640028650 +	TO-0566	TO-0567	TO-95
XB(08-14) 2.4L				TO-0566	TO-0568	TO-95
TC(05-14) 2.4/2.5L	2776		1640028350	TO-0238	TO-0239	TO-45
SUBARU						
B9(06-07) 3.0L	2846			SU-0048	SU-0049	SU-8
BAJA(03-06) 2.5L	2331		45111AE00A +	SU-0009	SU-0010	SU-2
BAJA(03-06) 2.5L				SU-0009	SU-0011	SU-2
BAJA(04-06) 2.5L	2703 +	67708	45111FE050 +	SU-0004	SU-0002	SU-1
BAJA(04-06) 2.5L				SU-0006	SU-0007	SU-2
DL(85-89) 1.8L	935		45111GA570 +	SU-0044	SU-0045	SU-7
FORESTER(99-08) 2.5L	2402 +	67728	45111FC340 +	SU-0016	SU-0017	SU-3
FORESTER(04-05) 2.5L	2812	67707A	45111SA090 +	SU-0018	SU-0017	SU-4
FORESTER(06-08)2.5L	13026			SU-0056	SU-0017	SU-9
FORESTER(09-13) 2.5L	2777 +	67723	45111AG00A +	SU-0033	SU-0034	SU-6
FORESTER(09-13) 2.5L	13095	67716 +	45119SC020	SU-0037	SU-0038	SU-6
FORESTER(14-)				SU-0050	SU-0051	SU-8
GL(85-89) 1.8L	935		45111GA570 +	SU-0044	SU-0045	SU-7
IMPREZA(93-98) 1.8/2.2L	1574		45199FA030 +	SU-0012	SU-0013	SU-3
IMPREZA(93-98) 1.8/2.2L				SU-0014	SU-0013	SU-3
IMPREZA(93-98) 1.8/2.2L				SU-0015	SU-0013	SU-3
IMPREZA(99-01) 2.2L	2402 +	67728	45111FC340 +	SU-0016	SU-0017	SU-3
IMPREZA(02-03) 2.0L	2451	64116	45111FE000 +	SU-0001	SU-0002	SU-1
IMPREZA(02-03) 2.0L				SU-0003	SU-0002	SU-1
IMPREZA(02-07) 1.6/2.0/2.5L	2464	67711	45111FE000 +	SU-0005	SU-0002	SU-1
IMPREZA(02-07) 2.5L				SU-0008	SU-0007	SU-2
IMPREZA(03-07) 2.0/2.5L	2703 +	67708	45111FE050 +	SU-0004	SU-0002	SU-1
IMPREZA(03-07) 2.0/2.5L				SU-0006	SU-0007	SU-2
IMPREZA(08-15) 2.0/2.5L	2777 +	67723	45111AG00A +	SU-0033	SU-0034	SU-6
IMPREZA(08-14) 2.5L	2778 +		45111AG02A +	SU-0035	SU-0034	SU-6
IMPREZA WRX(08-14) 2.5L	13093	67717	45119FG030	SU-0036	SU-0034	SU-6
LEGACY(90-94) 2.2L	1183 +		45111AA181 +	SU-0021	SU-0022	SU-4
LEGACY(90-94) 2.2L				SU-0023	SU-0024	SU-4
LEGACY(90-94)2.2L	1183 +		45111AA181 +	SU-0055	SU-0022	SU-9
LEGACY(90-94)2.2L				SU-0055-1	SU-0024	SU-9
LEGACY(91-94) 2.2L	1819	641111 +	45111AA240 +	SU-0025	SU-0026	SU-5
LEGACY(91-94) 2.2L				SU-0040	SU-0041	SU-7
LEGACY(94-) 2.5L		67702	45199AC250	SU-0027	SU-0028	SU-5
LEGACY(94-) 2.5L				SU-0042	SU-0043	SU-7
LEGACY(95-99) 2.2/2.5L	1853		45199AC040 +	SU-0019	SU-0020	SU-4

Model	DPI	NISSENS	OEM	Hongyan		Page
LEGACY(00-04) 2.5L	2331		45111AE00A +	SU-0009	SU-0010	SU-2
LEGACY(00-04) 2.5L				SU-0009	SU-0011	SU-2
LEGACY(05-09) 2.5L	2778 +		45111AG02A +	SU-0035	SU-0034	SU-6
LEGACY(06-09) 2.5L	2777 +	67723	45111AG00A +	SU-0033	SU-0034	SU-6
LEGACY(08-09) 3.0L	2779		45111AG04A	SU-0031	SU-0032	SU-5
LEGACY(09-15) 2.0L		67721	45119AJ070	SU-0039	SU-0038	SU-7
LIBERTY(09-14) 2.0L		67721	45119AJ070	SU-0039	SU-0038	SU-7
LEGACY(15-16)3.6L	13460			SU-0057	SU-0058	SU-10
LEGACY(15-16)3.6L	13461			SU-0059	SU-0058	SU-10
OUTBACK(00-04) 2.5L	2331		45111AE00A +	SU-0009	SU-0010	SU-2
OUTBACK(00-04) 2.5L				SU-0009	SU-0011	SU-2
OUTBACK(01-04) 3.0L	2465		45111AE06A	SU-0029	SU-0030	SU-5
OUTBACK(05-08) 3.0L	2779		45111AG04A	SU-0031	SU-0032	SU-5
OUTBACK(05-09) 2.5L	2778 +		45111AG02A +	SU-0035	SU-0034	SU-6
OUTBACK(09-15) 2.0L		67721	45119AJ070	SU-0039	SU-0038	SU-7
OUTBACK(15-16)3.6L	13460			SU-0057	SU-0058	SU-10
OUTBACK (15-16)3.6L	13461			SU-0059	SU-0058	SU-10
RX(85-89) 1.8L	935		45111GA570 +	SU-0044	SU-0045	SU-7
FORESTER（14-15）2.0/2.5L	13424 +		45111SG010	SU-0052	SU-0053	SU-8
SVX(92-97)	2083			SU-0046	SU-0047	SU-8
TRIBECA(08-14) 3.6L	2846			SU-0048	SU-0049	SU-8
WRX(13-14) 2.5L	2778 +		45111AG02A +	SU-0035	SU-0034	SU-6
SUBARU				SU-0054	SU-0038	SU-9
SUZUKI						
AERIO(02-07) 1.3/1.5/1.6L		64167A +	1770054G00 +	SUZ-0021	SUZ-0023	SUZ-4
AERIO(02-06) 2.0/2.3L	2451		1770054G20 +	SUZ-0021	SUZ-0022	SUZ-4
ALTO(85-）			1770084200	SUZ-0090	SUZ-0091	SUZ-14
ALTO(86-93）			1770084200	SUZ-0100	SUZ-0101	SUZ-15
ALTO(02-08) 1.1L		64204	1770079F00 +	SUZ-0076	SUZ-0077	SUZ-12
ALTO(05-）				SUZ-0108	SUZ-0109	SUZ-16
ALTO(09-15) 1.1L		69401	1770068K00 +	SUZ-0003	SUZ-0004	SUZ-1
ALTO(12-)				SUZ-0074	SUZ-0075	SUZ-11
ALTO				SUZ-0055	SUZ-0056	SUZ-9
ALTO				SUZ-0057	SUZ-0058	SUZ-9
ALTO				SUZ-0117	SUZ-0118	SUZ-18
BALENO(96-02) 1.3/1.6L		64193	1770063G12	SUZ-0034	SUZ-0035	SUZ-6
BALENO(96-02) 1.8L		64168	1770062G01	SUZ-0036	SUZ-0037	SUZ-6
CARRY(09-)				SUZ-0017	SUZ-0018	SUZ-3
CARRY				SUZ-0063	SUZ-0064	SUZ-10
CARRY				SUZ-0069	SUZ-0070	SUZ-11
CARRY				SUZ-0071	SUZ-0070	SUZ-11
CARRY				SUZ-0125	SUZ-0126	SUZ-19
EQUATOR (09-12)2.5L	2808		21460EA005	NI-0160	NI-0159	NI-48
EQUATOR (09-12)4.0L	2807		21460EA215	NI-0158	NI-0159	NI-48
ESCUDO(94-98) 2.0L		64165	1770078E20 +	SUZ-0072	SUZ-0073	SUZ-11
ESTEEM(95-01) 1.6L	2085 +	64176 +	1770060G01 +	SUZ-0032	SUZ-0033	SUZ-6
GRAND ESCUDO(98-05) 2.0L		64165	1770078E20 +	SUZ-0072	SUZ-0073	SUZ-11
GRAND VITARA(98-05) 2.0L		64165	1770078E20 +	SUZ-0072	SUZ-0073	SUZ-11
GRAND VITARA(99-01) 2.5L	2087 +	64159	1770056B12 +	SUZ-0008	SUZ-0009	SUZ-2
GRAND VITARA(99-01) 2.5L				SUZ-0008	SUZ-0010	SUZ-2

Model	DPI	NISSENS	OEM	Hongyan		Page
GRAND VITARA(00-05) 2.5L	2430		1770052D00 +	SUZ-0011	SUZ-0012	SUZ-2
GRAND VITARA(01-05) 2.0L				SUZ-0015	SUZ-0012	SUZ-3
GRAND VITARA(01-05) 2.0L				SUZ-0016	SUZ-0012	SUZ-3
GRAND VITARA(05-10) 1.9L		64201	1770067J00	SUZ-0027	SUZ-0031	SUZ-5
GRAND VITARA(06-13) 2.4/2.7/3.2L		64202	1770066J10	SUZ-0027	SUZ-0028	SUZ-5
GRAND VITARA(06-13) 2.4/2.7/3.2L				SUZ-0027	SUZ-0029	SUZ-5
GRAND VITARA(09-15) 2.0/2.4L		64199 +	1770065J10	SUZ-0027	SUZ-0030	SUZ-5
IGNIS(00-03) 1.3L		64159	1770080G00	SUZ-0084	SUZ-0085	SUZ-13
IGNIS(00-)1.3L		630749	9204617 +	OP-0159	OP-0160	OP-24
JIMNY(98-06) 1.3L		64162	1770080A00 +	SUZ-0019	SUZ-0020	SUZ-3
JIMNY				SUZ-0065	SUZ-0066	SUZ-10
JIMNY				SUZ-0067	SUZ-0068	SUZ-10
JIMMY				SUZ-0098	SUZ-0099	SUZ-15
NAHLO（13-）				SUZ-0104	SUZ-0105	SUZ-15
SIDEKICK(89-98)1.6L	1118		1770060A11	SUZ-0119	SUZ-0120	SUZ-18
SIDEKICK(92-98) 1.6L	1864 +		1770056B01 +	SUZ-0048	SUZ-0049	SUZ-8
SIDEKICK(92-98) 1.6L				SUZ-0050	SUZ-0049	SUZ-8
SIDEKICK(92-98) 1.6L				SUZ-0051	SUZ-0049	SUZ-8
SIDEKICK(96-98) 1.8L	2087 +	64159	1770056B12 +	SUZ-0008	SUZ-0009	SUZ-2
SIDEKICK(96-98) 1.8L				SUZ-0008	SUZ-0010	SUZ-2
SPLASH(08-15) 1.2L		630706 +	1770073KB0 +	SUZ-0042	SUZ-0043	SUZ-7
SWIFT（89-01）			1770060B21/2	SUZ-0102	SUZ-0103	SUZ-15
SWIFT(89-01)			1770060B21/2	SUZ-0123	SUZ-0124	SUZ-18
SWIFT(90-94) 1.0/1.3L	1168		1770063B11 +	SUZ-0001	SUZ-0054	SUZ-9
SWIFT(90-94) 1.0/1.3L	1444		1770060B11 +	SUZ-0001	SUZ-0002	SUZ-1
SWIFT(95-99) 1.3L	1732		1770050G00 +	SUZ-0059	SUZ-0060	SUZ-9
SWIFT(04-08) 1.6L	2873	61636	96443478 +	DA-0007	DA-0008	DA-2
SWIFT(05-10) 1.3L		69404	1770072K50	SUZ-0005	SUZ-0006	SUZ-1
SWIFT(05-10) 1.3L				SUZ-0005	SUZ-0007	SUZ-1
SWIFT(05-11) 1.3L		69400 +	1770062J00 +	SUZ-0044	SUZ-0045	SUZ-7
SWIFT（05-）				SUZ-0106	SUZ-0107	SUZ-16
SWIFT(10-15) 1.2L		64258	1770071L10	SUZ-0088	SUZ-0089	SUZ-13
SWIFT（10-）1.2/1.6L		641758 +	1770069L00 +	SUZ-0115	SUZ-0116	SUZ-17
SWIFT（10-）1.2/1.6L				SUZ-0115	SUZ-0116-1	SUZ-17
SWIFT			1770080G00	SUZ-0110	SUZ-0111	SUZ-16
SX4(05-)				SUZ-0096	SUZ-0097	SUZ-14
SX4(07-09) 1.5/1.6L		64179	1770079J00 +	SUZ-0024	SUZ-0025	SUZ-4
SX4(07-09) 2.0L	2980	64205	1770080J10 +	SUZ-0024	SUZ-0026	SUZ-4
SX4(09-) 2.0L		64256	71750368	SUZ-0092	SUZ-0093	SUZ-14
SX-4(09-)2.0L		64256	71750368	SUZ-0092	SUZ-0093	SUZ-14
VITARA(94-98) 2.0L		64165	1770078E20 +	SUZ-0072	SUZ-0073	SUZ-11
VITARA(99-03) 1.6L	13028			SUZ-0052	SUZ-0053	SUZ-8
VITARA(99-03) 1.6/1.8/2.0L	2087 +	64159	1770056B12 +	SUZ-0008	SUZ-0009	SUZ-2
VITARA(99-03) 1.6/1.8/2.0L				SUZ-0008	SUZ-0010	SUZ-2
VITARA(01-03)1.6/1.8/2.0L	2430		1770052D00 +	SUZ-0011	SUZ-0012	SUZ-2
WAGON R(98-02) 1.2L		64175A	1770075F00 +	SUZ-0076	SUZ-0078	SUZ-12
WAGON R(98-02) 1.2L				SUZ-0076	SUZ-0079	SUZ-12
WAGON R(98-02) 1.2L				SUZ-0080	SUZ-0081	SUZ-12
WAGON R				SUZ-0082	SUZ-0083	SUZ-13
WAGON R			1770058J50	SUZ-0112	SUZ-0081	SUZ-16
X-90(96-98) 1.6L	2089	64079	1770060A12	SUZ-0046	SUZ-0047	SUZ-7

Model	DPI	NISSENS	OEM	Hongyan		Page
XL-7(04-05) 2.7L	2933		1770052D21 +	SUZ-0013	SUZ-0014	SUZ-2
SUZUKI				SUZ-0038		SUZ-6
SUZUKI				SUZ-0040	SUZ-0041	SUZ-7
SUZUKI				SUZ-0061	SUZ-0062	SUZ-10
SUZUKI				SUZ-0086	SUZ-0087	SUZ-13
SUZUKI				SUZ-0090	SUZ-0091	SUZ-14
SUZUKI				SUZ-0094	SUZ-0095	SUZ-14
SUZUKI				SUZ-0040	SUZ-0114	SUZ-17
SUZUKI				SUZ-0113	SUZ-0085	SUZ-17
SUZUKI	1118		1770060A11	SUZ-0119	SUZ-0120	SUZ-18
SUZUKI	1118		1770060A11	SUZ-0119	SUZ-0120	SUZ-18
SUZUKI			1770060D10	SUZ-0121	SUZ-0122	SUZ-18
SUZUKI				SUZ-0127	SUZ-0128	SUZ-19
SUZUKI				SUZ-0129	SUZ-0130	SUZ-19
SUZUKI				SUZ-0131	SUZ-0132	SUZ-19
SUZUKI				SUZ-0076	SUZ-0133	SUZ-20
SUZUKI				SUZ-0134	SUZ-0135	SUZ-20
SSANGYONG						
KORANDO(13-)				SS-0013	SS-0014	SS-2
KORANDO				SS-0007	SS-0008	SS-2
KORANDO				SS-0009	SS-0010	SS-2
MUSSO(93-)				SS-0015	SS-0016	SS-3
REXTON(09-) 2.9L		64318 +	2131008223 +	SS-0001	SS-0002	SS-1
REXTON(09-) 2.9L		64318 +	2131008223 +	SS-0003	SS-0002	SS-1
SSANGYONG				SS-0004	SS-0005	SS-1
SSANGYONG				SS-0004	SS-0006	SS-1
ACTYON SPORT(06-11)2.0L			2131032121	SS-0011	SS-0012	SS-2
TATA						
TATA				TA-0001	TA-0002	TA-1
TATA				TA-0003	TA-0004	TA-1
TATA				TA-0005	TA-0006	TA-1
TATA				TA-0007	TA-0008	TA-1
TATA				TA-0009	TA-0010	TA-2
TATA				TA-0011	TA-0012	TA-2
TATA				TA-0013	TA-0014	TA-2
TATA				TA-0015	TA-0016	TA-2
TATA				TA-0017	TA-0018	TA-3
TATA				TA-0019		TA-3
TATA				TA-0021	TA-0022	TA-3
TATA				TA-0023	TA-0022	TA-3
TATA				TA-0024	TA-0025	TA-4
TATA				TA-0026	TA-0027	TA-4
TATA				TA-0028	TA-0029	TA-4
TATA				TA-0030	TA-0031	TA-4
TATA				TA-0032	TA-0031	TA-5
TATA				TA-0033	TA-0034	TA-5
TATA				TA-0035	TA-0036	TA-5
TATA				TA-0037	TA-0038	TA-5

Model	DPI	NISSENS	OEM	Hongyan		Page
TOYOTA						
4RUNNER(85-) 2.4L	945	64728	1640004020 +	TO-0341	TO-0342	TO-61
4RUNNER(85-) 2.4L				TO-0341	TO-0342-1	TO-61
4RUNNER(85-) 2.4L				TO-0341	TO-0342-2	TO-61
4RUNNER(85-) 3.0L		64847	1640065040 +	TO-0331	TO-0332	TO-60
4RUNNER(88-95)	1190			TO-0488	TO-0489	TO-82
4RUNNER(88-95)				TO-0488	TO-0490	TO-83
4RUNNER(88-95)				TO-0491	TO-0492	TO-83
4RUNNER(88-95)	50			TO-0488	TO-0493	TO-83
4RUNNER(88-95)	147			TO-0494	TO-0495	TO-83
4RUNNER(88-95)				TO-0496	TO-0497	TO-84
4RUNNER(96-02) 2.7/3.4L	1998 +	647551	1640075160 +	TO-0001	TO-0002	TO-1
4RUNNER(96-02) 2.7/3.4L				TO-0005	TO-0006	TO-1
4RUNNER(03-09) 4.0L	2580		1640062230 +	TO-0318	TO-0319	TO-58
4RUNNER(03-09) 4.7L	2581		1640050300	TO-0320	TO-0321	TO-58
4RUNNER(03-09) 4.7L				TO-0322	TO-0321	TO-58
4RUNNER(10-14) 4.0L	13251	646825	1640075441	TO-0369	TO-0370	TO-66
4RUNNER(89-95)3.0L	50			TO-0865	TO-0866	TO-144
ALPHARD(05-08)			1604128610	TO-0569	TO-0570	TO-95
ALPHARD(05-08)			1604120380	TO-0571	TO-0572	TO-95
ALPHARD(08-)			1640031590	TO-0583	TO-0584	TO-97
AURIS(07-) 1.4L		64691	164000N060	TO-0410	TO-0411	TO-71
AURIS(08-) 1.4/1.6L		64692	164000D400	TO-0360	TO-0361	TO-64
AURIS(07-)2.0L			164000R030	TO-0666	TO-0667	TO-109
AVANZA(03-)			1640027050	TO-0522	TO-0523	TO-89
AVANZA(12-)1.3L			16410BZ320	TO-0669	TO-0670	TO-109
AVENSIS(97-01) 1.8L		64781A +	164000D100 +	TO-0032	TO-0029	TO-8
AVENSIS(97-01) 2.0L		64640A +	1640003180	TO-0032	TO-0031	TO-8
AVENSIS(97-) 2.0L		64785A	1640064831 +	TO-0139	TO-0140	TO-27
AVENSIS(97-) 2.0L			1640064831 +	TO-0139	TO-0140-1	TO-27
AVENSIS(97-) 2.0L			164006474 +	TO-0141	TO-0140	TO-27
AVENSIS(97-) 2.0L		64643A	164000G010	TO-0142	TO-0143	TO-28
AVENSIS(01-) 2.0/2.4L		64670A	164000P090	TO-0154	TO-0046	TO-29
AVENSIS(03-) 1.8L		64648A	164000D220	TO-0108	TO-0109	TO-22
AVENSIS(03-) 2.0/2.4L		64688A	164000H180	TO-0329	TO-0330	TO-59
AVENSIS(03-) 2.0L		64647A	164000G020 +	TO-0406	TO-0407	TO-71
AVENSIS(08-) 1.8/2.0L		64692	164000D400	TO-0360	TO-0361	TO-64
AVALON(95-97) 3.0L	1746		1640020040 +	TO-0049	TO-0050	TO-11
AVALON(95-99)	1874		164000A030 +	TO-0278	TO-0050	TO-52
AVALON(95-99)				TO-0279	TO-0050	TO-52
AVALON(00-04) 3.0L	2324 +		164000A170 +	TO-0280	TO-0281	TO-52
AVALON(05-12) 3.5L	2817 +		1640031520 +	TO-0130	TO-0131	TO-26
AVALON(13-14) 2.5/3.5L	13270 +	646872	164000P350 +	TO-0133	TO-0134	TO-26
AVALON(13-14)2.5/3.5L				TO-0133	TO-0686	TO-112
BB			16400B1080	DAI-0062	DAI-0015	DAI-10
CAMRY(87-91) 2.0L	870		1640074130 +	TO-0075	TO-0076	TO-16
CAMRY(87-91) 2.0L	1260		1640074200 +	TO-0075	TO-0077	TO-16
CAMRY(87-91)	532 +			TO-0709	TO-0710	TO-119
CAMRY(88-91)	21			TO-0815	TO-0816	TO-137
CAMRY(89-91)	532		1640074130	TO-0788	TO-0076	TO-131

Model	DPI	NISSENS	OEM	Hongyan		Page
CAMRY(92-93) 3.0L				TO-0025	TO-0026	TO-6
CAMRY(92-93) 3.0L	1303		1640062100 +	TO-0027	TO-0026	TO-6
CAMRY(92-94)			164007A140 +	TO-0092	TO-0093	TO-19
CAMRY（92-94）			164006A090 +	TO-0833	TO-0093	TO-139
CAMRY(92-96) 2.2L	1318		1640074760 +	TO-0042	TO-0043	TO-10
CAMRY(92-96) 2.2L	1428		1640003060 +	TO-0044	TO-0043	TO-10
CAMRY(95-96) 3.0L	1746		1640020040 +	TO-0049	TO-0050	TO-11
CAMRY(97-01) 2.2L	1909		164007A300 +	TO-0039	TO-0040	TO-10
CAMRY(97-01) 2.2L	2005		1640003150 +	TO-0041	TO-0040	TO-10
CAMRY(97-01) 3.0L	1910 +	647541	164000A200 +	TO-0054	TO-0055	TO-12
CAMRY(97-01) 3.0L				TO-0054	TO-0056	TO-12
CAMRY（01-07)	1910			TO-0739	TO-0740	TO-123
CAMRY(02-06) 2.4L	2437	646351	1640028280 +	TO-0123	TO-0124	TO-25
CAMRY(02-06) 2.4L	2436		1640020270	TO-0125	TO-0124	TO-25
CAMRY(02-05) 3.0L	2434 +		164002270 +	TO-0126	TO-0127	TO-25
CAMRY(02-)			1640001170/160	TO-0753	TO-0138	TO-126
CAMRY(07-11) 2.4/2.5L	2917		164000H291	TO-0128	TO-0129	TO-25
CAMRY(07-11) 2.4/3.5L	2817 +		1640031520 +	TO-0130	TO-0131	TO-26
CAMRY(07-11) 2.4/3.5L	13035		1640031520	TO-0132	TO-0131	TO-26
CAMRY(07-11)2.4/2.5L	2917		164000H291 +	TO-0801	TO-0129	TO-134
CAMRY(10-11)	13090 +			TO-0749	TO-0750	TO-125
CAMRY(12-14) 2.5/3.5L	13270 +	646872	164000P350 +	TO-0133	TO-0134	TO-26
CAMRY(12-14)2.5/3.5L				TO-0133	TO-0686	TO-112
CAMRY (13-)				TO-0418	TO-0419	TO-72
CARINA(83-) 1.6L		64741	1640011170	TO-0067	TO-0068	TO-14
CELICA(79-82) 2.2/2.4L	661			TO-0499	TO-0500	TO-84
CELICA(79-82) 2.2/2.4L				TO-0501	TO-0500	TO-84
CELICA(79-82) 2.2/2.4L				TO-0502	TO-0503	TO-85
CELICA(82-85)	812			TO-0745	TO-0746	TO-125
CELICA(86-89) 2.0L			1640074070	TO-0062	TO-0060	TO-13
CELICA(86-89) 2.0L			1640074320 +	TO-0059	TO-0060	TO-13
CELICA(86-89) 2.0L	836 +		1640074060 +	TO-0061	TO-0060	TO-13
CELICA(90-93) 1.6L	1407		1640016311	TO-0146	TO-0147	TO-28
CELICA(90-93) 2.2L	1174 +		1640074500 +	TO-0144	TO-0145	TO-28
CELICA(90-93)2.2L	1174 +		1640074500/10	TO-0792	TO-0145	TO-132
CELICA(90-93)2.2L				TO-0825	TO-0820	TO-138
CELICA(94-99) 1.8L	1748 +		164007A060	TO-0178	TO-0177	TO-34
CELICA(94-99) 1.8L				TO-0178	TO-0177-1	TO-34
CELICA(94-99) 2.2L	1575 +		164007A70	TO-0176	TO-0177	TO-34
CELICA(94-99) 2.2L				TO-0176	TO-0177-1	TO-34
CELICA(00-05) 1.8L	2335		1640022070	TO-0518	TO-0519	TO-88
CELICA(00-05) 1.8L	2335		1640022070	TO-0518	TO-0519-1	TO-88
COASTER(86-96)				TO-0806	TO-0807	TO-135
COASTER(97-99)			1640058570 +	TO-0185	TO-0186	TO-36
COASTER(97-99)				TO-0187	TO-0188	TO-36
COASTER(97-99)				TO-0189	TO-0190	TO-36
COASTER(97-99)			1640017251	TO-0191	TO-0192	TO-36
COASTER(97-99)				TO-0193	TO-0194	TO-37
COASTER(97-99)				TO-0193	TO-0195	TO-37
COASTER(97-99)				TO-0196	TO-0194	TO-37
COASTER(97-99)				TO-0196	TO-0195	TO-37

Model	DPI	NISSENS	OEM	Hongyan		Page
COROLLA(84-87) 1.6L	157 +		1640015200 +	TO-0065	TO-0066	TO-14
COROLLA(87-) 1.6L		64741	1640011170	TO-0067	TO-0068	TO-14
COROLLA(88-92) 1.6	539 +		1640001010 +	TO-0072	TO-0070	TO-15
COROLLA(88-92) 1.6				TO-0073	TO-0070	TO-15
COROLLA(88-92) 1.6			1640015380 +	TO-0069	TO-0074	TO-15
COROLLA(89-95）	538		1640016130	TO-0647	TO-0648	TO-106
COROLLA(90-92) 1.6	537 +		1640011210 +	TO-0069	TO-0070	TO-14
COROLLA(90-92) 1.6			1640011210 +	TO-0071	TO-0070	TO-15
COROLLA(93-97) CE110			1640064630 +	TO-0150	TO-0151	TO-29
COROLLA(93-97) 1.6/1.8L	1409		1640015510 +	TO-0229	TO-0230	TO-43
COROLLA(93-97) 1.6/1.8L				TO-0231	TO-0230	TO-44
COROLLA(93-97) 1.6/1.8L				TO-0232	TO-0230	TO-44
COROLLA(93-97) 1.6/1.8L	1436 +		1640015500 +	TO-0233	TO-0234	TO-44
COROLLA(93-97) 1.6/1.8L			1640015500 +	TO-0235	TO-0234	TO-44
COROLLA(93-97) 1.6/1.8L				TO-0236	TO-0237	TO-45
COROLLA(98-02) 1.8L	2198	646281 +	164000D030 +	TO-0337	TO-0338	TO-60
COROLLA(01-) 1.3/1.6L		64648A	164000D220	TO-0108	TO-0109	TO-22
COROLLA(01-) 1.4L		64679A	164000N030 +	TO-0408	TO-0409	TO-71
COROLLA(01-) 2.0L		64647A	164000G020 +	TO-0406	TO-0407	TO-71
COROLLA(03-05)				TO-0747	TO-0748	TO-125
COROLLA(03-08) 1.8L				TO-0106	TO-0107	TO-22
COROLLA(03-08) 1.8L	2428	646321	1640021180 +	TO-0110	TO-0111	TO-22
COROLLA(05-)			164006A290 +	TO-0327	TO-0328	TO-59
COROLLA(06-)			1641021180	TO-0358	TO-0359	TO-64
COROLLA(07-) 1.4L		64691	164000N060	TO-0410	TO-0411	TO-71
COROLLA(07-) 1.6L		64692	164000D400	TO-0360	TO-0361	TO-64
COROLLA (08-)				TO-0468	TO-0469	TO-79
COROLLA(09-11) 1.8L	13106 +		164000D420	TO-0355	TO-0356	TO-64
COROLLA(09-11) 1.8L				TO-0355	TO-0357	TO-64
COROLLA(09-11) 2.4L	13049		1641022180 +	TO-0351	TO-0352	TO-63
COROLLA(09-11) 2.4L				TO-0351	TO-0352-1	TO-63
COROLLA(09-11) 2.4L				TO-0351	TO-0353	TO-63
COROLLA(09-11) 2.4L				TO-0351	TO-0354	TO-63
COROLLA				TO-0555	TO-0556	TO-93
COROLLA				TO-0557	TO-0558	TO-93
CORONA(79-82) 2.2/2.4L	661			TO-0499	TO-0500	TO-84
CORONA(79-82) 2.2/2.4L				TO-0501	TO-0500	TO-84
CORONA(79-82) 2.2/2.4L				TO-0502	TO-0503	TO-85
CORONA(92-94) 1.8L			1640074790 +	TO-0028	TO-0031	TO-7
CORONA(92-94)			1640016460 +	TO-0028	TO-0029	TO-7
CORONA(92-94)			1640015590 +	TO-0028	TO-0029-1	TO-7
CORONA(92-94)			1640011580 +	TO-0030	TO-0029	TO-7
CORONA(97-)			164007A200 +	TO-0033	TO-0034	TO-8
CORONA			1640074810 +	TO-0030	TO-0031	TO-8
CORONA			1640016800 +	TO-0035	TO-0036	TO-9
CORONA			1640011780 +	TO-0035	TO-0036-1	TO-9
CORONA			164007A190 +	TO-0035	TO-0038-1	TO-9
COLLORA（13-）				TO-0639	TO-0640	TO-105
CROWN(83-87) 2.0/2.5/2.8L			1640046150/60	TO-0711	TO-0095	TO-119
CROWN (83-87)2.0/2.5/2.8L				TO-0712		TO-119
CROWN(83-87)2.0/2.5/2.8L				TO-0714		TO-120

Model	DPI	NISSENS	OEM	Hongyan		Page
CROWN(98-00)			1640046361 +	TO-0081	TO-0082	TO-17
CROWN(98-00)				TO-0083	TO-0082	TO-17
CROWN(99-)			1640046690 +	TO-0228	TO-0082	TO-43
CROWN				TO-0598	TO-0599	TO-99
CRESSIDA(85-88) 2.8L	939 +		1640070100 +	TO-0097	TO-0098	TO-20
CRESSIDA(89-02) 3.0L	178 +		1640070341 +	TO-0099	TO-0100	TO-20
CRESSIDA(89-02) 3.0L			1640070341 +	TO-0099	TO-0100-1	TO-21
CRESSIDA(92-94)			1640070490 +	TO-0084	TO-0082	TO-17
CRESSIDA(92-94)			1640070490 +	TO-0084	TO-0082-1	TO-18
CRESSIDA(95-96)			1640035470 +	TO-0225	TO-0226	TO-43
CRESSIDA(95-96)				TO-0227	TO-0226-1	TO-43
CRESSIDA(96-98)			1640046361 +	TO-0081	TO-0082	TO-17
CRESSIDA(96-98)				TO-0083	TO-0082	TO-17
DYNA(97-99)			1640058241 +	TO-0205	TO-0206	TO-39
DYNA(97-99)			1640073491 +	TO-0207	TO-0208	TO-39
DYNA(97-99)			1640058530 +	TO-0205	TO-0209	TO-39
DYNA(97-99)			1640058450 +	TO-0210	TO-0209	TO-40
DYNA(97-99)			1640058301 +	TO-0210	TO-0206	TO-40
DYNA(97-99)			1640058470 +	TO-0211	TO-0212	TO-40
DYNA(97-99)			1640058440 +	TO-0211	TO-0213	TO-40
DYNA(97-99)			1640058440 +	TO-0211	TO-0214	TO-41
DYNA(97-99)			1640058430	TO-0211	TO-0215	TO-41
DYNA(97-99)				TO-0404	TO-0405	TO-70
DYNA(04-06)			1640078331	TO-0810	TO-0545	TO-136
DYNA(04-06)			1640078321	TO-0811	TO-0545	TO-136
DYNA			164005B860 +	TO-0202	TO-0203	TO-38
DYNA			1640075400 +	TO-0204	TO-0203	TO-39
DYNA				TO-0470	TO-0471	TO-79
DYNA				TO-0504	TO-0505	TO-85
DYNA				TO-0506	TO-0505	TO-85
DYNA				TO-0507	TO-0505	TO-85
DYNA				TO-0508	TO-0505	TO-86
DYNA				TO-0509	TO-0505	TO-86
DYNA				TO-0510	TO-0505	TO-86
DYNA				TO-0511	TO-0505	TO-86
DYNA				TO-0512	TO-0505	TO-87
DYNA				TO-0513	TO-0505	TO-87
DYNA				TO-0514	TO-0515	TO-87
DYNA				TO-0516	TO-0517	TO-87
DYNA				TO-0575	TO-0576	TO-96
DYNA				TO-0668	TO-0203	TO-109
DYNA				TO-0842	TO-0843	TO-141
DYNA				TO-0844	TO-0212	TO-141
ECHO(00-05) 1.5L	2304 +	64798 +	1640021070 +	TO-0287	TO-0288	TO-53
ECHO(00-05) 1.5L				TO-0289	TO-0290	TO-54
ECHO(00-05)1.5L	2304 +	64798 +	1640021080 +	TO-0869	TO-0288	TO-145
ESTIMA(91-96)			1640076101 +	TO-0216	TO-0217	TO-41
ESTIMA(99-03)			164007A140 +	TO-0303	TO-0304	TO-55
ESTIMA(06-)			1640028560	TO-0581	TO-0582	TO-97
FJ CRUISER(07-14) 4.0L	2580		1640062230 +	TO-0318	TO-0319	TO-58
FORKLIFT				TO-0656	TO-0657	TO-107

Model	DPI	NISSENS	OEM	Hongyan		Page
FORKLIFT				TO-0656	TO-0658	TO-108
FORKLIFT				TO-0656	TO-0659	TO-108
FORKLIFT				TO-0660	TO-0661	TO-108
FORKLIFT				TO-0693	TO-0694	TO-113
FORKLIFT				TO-0693	TO-0694-1	TO-113
FORKLIFT				TO-0693	TO-0694-2	TO-113
FORKLIFT				TO-0693	TO-0694-3	TO-114
FORKLIFT				TO-0693	TO-0694-4	TO-114
FORKLIFT				TO-0693	TO-0694-5	TO-114
FORKLIFT				TO-0695	TO-0696	TO-114
FORKLIFT				TO-0695	TO-0696-1	TO-115
FORKLIFT				TO-0695	TO-0696-2	TO-115
FORKLIFT				TO-0695	TO-0696-3	TO-115
FORKLIFT				TO-0695	TO-0696-4	TO-115
FORKLIFT				TO-0695	TO-0696-5	TO-116
FORKLIFT				TO-0697	TO-0698	TO-116
FORKLIFT				TO-0697-1	TO-0698	TO-116
FORKLIFT				TO-0697-2	TO-0698	TO-116
FORKLIFT				TO-0697-3	TO-0698-1	TO-117
FORKLIFT				TO-0697-4	TO-0698-1	TO-117
FORKLIFT				TO-0697-5	TO-0698-1	TO-117
FORKLIFT				TO-0741	TO-0427	TO-124
FORKLIFT				TO-0424	TO-0742AT	TO-124
FORKLIFT				TO-0432	TO-0743AT	TO-124
FORKLIFT				TO-0744	TO-0441	TO-124
HARRIER				TO-0367	TO-0368	TO-65
HIACE(88-89)				TO-0673	TO-0674	TO-110
HIACE(88-89)				TO-0675	TO-0676	TO-110
HIACE(89-) 2.4/2.8L(DIESEL)		64737	164005B750 +	TO-0179	TO-0180	TO-35
HIACE(89-) 2.4/2.8L(GAS)		64778	1640075350 +	TO-0181	TO-0182	TO-35
HIACE(89-) 2.4/2.8L(GAS)				TO-0181	TO-0182-1	TO-35
HIACE(95-) 2.4L(DIESEL)		64857A	164005B320 +	TO-0251	TO-0252	TO-47
HIACE(95-) 2.4/2.7L(GAS)		64858A	164005B320 +	TO-0253	TO-0252	TO-47
HIACE(95-) 3.0L(GAS)		64859A +	1640067100	TO-0248	TO-0249	TO-47
HIACE(96-99)			1640067160	TO-0388	TO-0389	TO-68
HIACE(14-)				TO-0633	TO-0634	TO-104
HIACE(14-)				TO-0633	TO-0646	TO-106
HIACE				TO-0250	TO-0249	TO-47
HIACE				TO-0183	TO-0184	TO-35
HIACE(DIESEL)			1640030160 +	TO-0392	TO-0393	TO-69
HIACE(GAS)			1640075470	TO-0394	TO-0395	TO-69
HIACE(GAS)			1651030010	TO-0840	TO-0841	TO-141
HIACE				TO-0392	TO-0396	TO-69
HIACE(JINBEI)				TO-0462	TO-0463	TO-78
HIACE(JINBEI)				TO-0462	TO-0464	TO-78
HIACE				TO-0486	TO-0487	TO-82
HIACE				TO-0526	TO-0527	TO-89
HIACE				TO-0573	TO-0574	TO-96
HIACE				TO-0397	TO-0780	TO-130
HIACE				TO-0397	TO-0781	TO-130
HIACE				TO-0397	TO-0782	TO-130

Model	DPI	NISSENS	OEM	Hongyan		Page
HIACE				TO-0400	TO-0783	TO-131
HILUX(84-) 1.6/1.8/2.0/2.2L	945	64728	1640004020 +	TO-0341	TO-0342	TO-61
HILUX(84-) 1.6/1.8/2.0/2.2L				TO-0341	TO-0342-1	TO-61
HILUX(84-) 1.6/1.8/2.0/2.2L				TO-0341	TO-0342-2	TO-61
HILUX(88-) 3.0L		64847	1640065040 +	TO-0331	TO-0332	TO-60
HILUX(89-97)			1640035370	TO-0377	TO-0378	TO-67
HILUX(89-97)				TO-0379	TO-0380	TO-67
HILUX（89-）2.4/3L			1640054630	TO-0687	TO-0688	TO-112
HILUX（89-）2.4/3L				TO-0689	TO-0690	TO-112
HILUX(06-) 2.5/3.0L		646807 +	164000L150 +	TO-0261	TO-0262	TO-49
HILUX(06-)			164100C140 +	TO-0263	TO-0264	TO-49
HILUX(06-)			164000P606 +	TO-0265	TO-0264	TO-49
HILUX(06-)				TO-0266	TO-0264	TO-50
HILUX(06-)				TO-0265	TO-0267	TO-50
HILUX (16-)				TO-0827	TO-0828	TO-139
HILUX（16-）				TO-0829	TO-0830	TO-139
HILUX 2.0L				TO-0494	TO-0691	TO-112
HILUX 2.7L				TO-0716	TO-0717	TO-120
HILUX			164005B590	TO-0160	TO-0161	TO-31
HILUX				TO-0160	TO-0162	TO-31
HILUX				TO-0163	TO-0161	TO-31
HILUX				TO-0163	TO-0162	TO-31
HILUX				TO-0164	TO-0165	TO-32
HILUX			1640030080	TO-0164	TO-0166	TO-32
HILUX				TO-0164	TO-0167	TO-32
HILUX			164000L060	TO-0168	TO-0166	TO-32
HILUX			164005B630	TO-0169	TO-0162	TO-33
HILUX				TO-0170	TO-0171	TO-33
HILUX				TO-0172	TO-0173	TO-33
HINGLANDER(01-03) 3.0L				TO-0312	TO-0314	TO-57
HINGLANDER(01-07) 2.4L	2453		164007A550	TO-0305	TO-0306	TO-56
HINGLANDER(01-07) 2.4L				TO-0305	TO-0307	TO-56
HINGLANDER(01-07) 2.4L			1640028220 +	TO-0308	TO-0309	TO-56
HINGLANDER(01-07) 2.4L	2454		1640028260	TO-0310	TO-0306	TO-56
HINGLANDER(01-07) 2.4L				TO-0311	TO-0306	TO-57
HINGLANDER(01-07) 3.0/3.3L	2377 +		1640020240	TO-0315	TO-0316	TO-57
HINGLANDER(01-07) 3.0/3.3L				TO-0317	TO-0316	TO-58
HIGHLANDER(06-07) 3.3L			1604120351 +	TO-0362	TO-0363	TO-65
HIGHLANDER(06-07) 3.3L	2929		1604120351 +	TO-0364	TO-0363	TO-65
HINGLANDER(08-13) 3.5L	13024		1604131540 +	TO-0385	TO-0387	TO-68
HINGLANDER(09-13) 2.7L	13122 +		1604136050 +	TO-0385	TO-0386	TO-68
HIGHLANDER（14-16) 2.7/3.5L	13450		164000P410	TO-0649	TO-0650	TO-106
HIGHLANDER(14-16)2.7/3.5L	13449		164000P420	TO-0649	TO-0651	TO-106
HIGHLANDER(14-16)2.7/3.5L				TO-0649	TO-0652	TO-107
HIGHLANDER(14-16)2.7/3.5L				TO-0649	TO-0653	TO-107
HIGHLANDER INTERCOOLER				TO-0856	TO-0857	TO-143
IPSUM(96-) 2.0L		64795A +	164007A260 +	TO-0037	TO-0038	TO-9
IPSUM(96-) 2.2L		64797A	164006A180 +	TO-0152	TO-0153	TO-29
IPSUM(01-) 2.0/2.4L		64670A	164000P090	TO-0154	TO-0046	TO-29
LAND CRUISER(91-98) 4.0L	1469	64861	1640061170 +	TO-0010	TO-0011	TO-2
LAND CRUISER(91-98) 4.0L				TO-0012	TO-0011	TO-2

Model	DPI	NISSENS	OEM	Hongyan		Page
LAND CRUISER(91-98) 4.0L			1640066040 +	TO-0012	TO-0013	TO-2
LAND CRUISER(93-97) 4.5L	1917		1640066050	TO-0012	TO-0014	TO-3
LAND CRUISER(93-97) 4.5L	1918		1640066080 +	TO-0023	TO-0024	TO-6
LAND CRULSER（93-98）			1640067020/030	TO-0838	TO-0839	TO-140
LAND CRUISER(96-99)			1640017071 +	TO-0200	TO-0201	TO-38
LAND CRUISER（96-99）			1640017071/161	TO-0683	TO-0201	TO-111
LAND CRUISER(96-02) 3.0L				TO-0007	TO-0008	TO-1
LAND CRUISER(96-02) 3.0L		64636A +	1640067121 +	TO-0003	TO-0004	TO-1
LAND CRUISER(96-02) 3.4L	1998 +	647551	1640075160 +	TO-0001	TO-0002	TO-1
LAND CRUISER(96-02) 3.4L				TO-0005	TO-0006	TO-1
LAND CRUISER(98-02) 4.7L	2282		1640050210	TO-0016	TO-0018	TO-4
LAND CRUISER(98-02) 4.7L			1640050210	TO-0016	TO-0018-1	TO-4
LAND CRUISER(02-)			1640066060	TO-0197	TO-0198	TO-38
LAND CRUISER(05-)			1640066160	TO-0199	TO-0198	TO-38
LAND CRUISER （03-06）				TO-0867	TO-0449	TO-145
LAND CRUISER(06-)				TO-0654	TO-0655	TO-107
LAND CRUISER(08-14) 5.7L	13080	646827	1640050380	TO-0371	TO-0372	TO-66
LAND CRUISER(08-14) 5.7L				TO-0373	TO-0374	TO-66
LAND CRUISER(08-14) 5.7L				TO-0498	TO-0372	TO-84
LAND CRUISER(12-)				TO-0635	TO-0636	TO-104
LAND CRUISER PRADO(96-)		64637A	1640067130 +	TO-0817	TO-0818	TO-137
LAND CRUISER PRADO(96-)		64755A +	1640075180 +	TO-0819	TO-0820	TO-137
LAND CRUISER PRADO 150 3.0L				TO-0637	TO-0638	TO-104
LAND CRUISER 2.7L				TO-0716	TO-0717	TO-120
LAND CRUISER				TO-0009	TO-0002	TO-2
LAND CRUISER				TO-0015	TO-0011	TO-3
LAND CRUISER				TO-0015	TO-0014	TO-3
LAND CRUISER				TO-0016	TO-0017	TO-3
LAND CRUISER				TO-0016	TO-0017-1	TO-4
LAND CRUISER			1640017031 +	TO-0019	TO-0017	TO-4
LAND CRUISER			1640066120 +	TO-0019	TO-0018	TO-5
LAND CRUISER			1640066120 +	TO-0019	TO-0018-1	TO-5
LAND CRUISER				TO-0019	TO-0020	TO-5
LAND CRUISER				TO-0019	TO-0020-1	TO-5
LAND CRUISER				TO-0021	TO-0022	TO-6
LAND CRUISER				TO-0476	TO-0477	TO-80
LAND CRUSER	10082			TO-0776	TO-0777	TO-129
LAND CRUSER				TO-0778	TO-0779	TO-130
LIFT(94-)			1641023650 +	TO-0299	TO-0300	TO-55
LIFT				TO-0301	TO-0302	TO-55
MATRIX(03-08) 1.8L				TO-0106	TO-0107	TO-22
MATRIX(03-08) 1.8L	2428	646321	1640021180 +	TO-0110	TO-0111	TO-22
MATRIX(09-13) 1.8L	13106 +		164000D420	TO-0355	TO-0356	TO-64
MATRIX(09-13) 1.8L				TO-0355	TO-0357	TO-64
MATRIX(09-13) 2.4L	13049		1641022180 +	TO-0351	TO-0352	TO-63
MATRIX(09-13) 2.4L				TO-0351	TO-0352-1	TO-63
MATRIX(09-13) 2.4L				TO-0351	TO-0353	TO-63
MATRIX(09-13) 2.4L				TO-0351	TO-0354	TO-63
MR2(00-05)1.8L	2358		1640022110	TO-0520	TO-0521	TO-88
MR2(00-05)1.8L	2358		1640022110	TO-0520	TO-0521-1	TO-88
NOAH(07-)		64670A	164000P090	TO-0154	TO-0046	TO-29

Model	DPI	NISSENS	OEM	Hongyan		Page
PASEO(92-95)1.5L	1381			TO-0802	TO-0803	TO-134
PASEO(92-95)1.5L	1381			TO-0802	TO-0814	TO-137
PASEO(93-95) 1.5L	1319		1640011460 +	TO-0148	TO-0149	TO-28
PASEO(93-95) 1.5L	1319		1640011460 +	TO-0148	TO-0149-1	TO-29
PASEO(96-99) 1.5L	1758		1640011640 +	TO-0101	TO-0102	TO-21
PASEO(96-99) 1.5L	1750		1640011650 +	TO-0103	TO-0102	TO-21
PASSO			16400B1080	DAI-0062	DAI-0015	DAI-10
PICNIC(96-) 2.0L		64795A +	164007A260 +	TO-0037	TO-0038	TO-9
PICNIC(96-) 2.2L		64797A	164006A180 +	TO-0152	TO-0153	TO-29
PICNIC(01-) 2.0/2.4L		64670A	164000P090	TO-0154	TO-0046	TO-29
PICKUP(88-95)3.0L	50			TO-0865	TO-0866	TO-144
PICKUP(88-95)	1190			TO-0488	TO-0489	TO-82
PICKUP(88-95)				TO-0488	TO-0490	TO-83
PICKUP(88-95)				TO-0491	TO-0492	TO-83
PICKUP(88-95)	50			TO-0488	TO-0493	TO-83
PICKUP(88-95)	147			TO-0494	TO-0495	TO-83
PICKUP(88-95)				TO-0496	TO-0497	TO-84
PICKUP(88-95)				TO-0763	TO-0691	TO-127
PICKUP(88-95)				TO-0687	TO-0764	TO-127
PICKUP(88-95)				TO-0687	TO-0765	TO-128
PICKUP(88-95)				TO-0766	TO-0767	TO-128
PICKUP(88-95)				TO-0768	TO-0769	TO-128
PICKUP(88-95)				TO-0770	O-0771	TO-128
PICKUP(88-95)				TO-0772	TO-0773	TO-129
PICKUP(88-95)				TO-0774	TO-0773	TO-129
PICKUP(88-95)				TO-0775	TO-0492	TO-129
PICKUP(97-02)				TO-0793	TO-0161	TO-132
PICKUP(97-02)				TO-0794	TO-0161	TO-133
PICKUP(97-02)				TO-0795	TO-0162	TO-133
PICKUP(97-02)				TO-0796	TO-0165	TO-133
PICKUP(97-02)				TO-0797	TO-0798	TO-133
PICKUP(97-02)				TO-0799	TO-0162	TO-134
PICKUP(97-02)				TO-0800	TO-0165	TO-134
PICKUP(12-)				TO-0852	TO-0853	TO-142
PREVIA(91-95) 2.4L	1155		1640076801 +	TO-0218	TO-0217	TO-41
PREVIA(91-96)			1640076101 +	TO-0216	TO-0217	TO-41
PREVIA(06-)			1640028560	TO-0581	TO-0582	TO-97
PRIUS(04-09) 1.5L	2758		1640021050	TO-0524	TO-0525	TO-89
PRIUS(10-14) 1.8L	13119		1640037230	TO-0412	TO-0413	TO-71
PRIUS(10-14) 1.8L	13124		G901047030	TO-0416	TO-0417	TO-72
PRIUS(10-)				TO-0614	TO-0615	TO-101
PRIUS(12-16)4.5L	13319			TO-0671	TO-0672	TO-110
PRIUS(15-)				TO-0707	TO-0708	TO-119
RAV4(94-97)2.0L		6476A +		TO-0722	TO-0723	TO-121
RAV4(94-97)2.0L				TO-0725	TO-0272	TO-121
RAV4(96-97) 2.0L	1859 +		164007A120 +	TO-0273	TO-0272	TO-51
RAV4(97-20)2.0L		64630A +	164007A480/7A500	TO-0724	TO-0723	TO-121
RAV4(97-20)2.0L				TO-0726	TO-0272	TO-121
RAV4(98-00) 2.0L	2292 +		164007A470 +	TO-0271	TO-0272	TO-51
RAV4(01-05) 1.8L		646852		TO-0116	TO-0120	TO-24
RAV4(01-05) 2.0L		64638A	1640027060 +	TO-0122	TO-0118	TO-24

Model	DPI	NISSENS	OEM	Hongyan		Page
RAV4(01-05) 2.0/2.4L	2403 +		1640028190 +	TO-0116	TO-0117	TO-23
RAV4(01-05) 2.0/2.4L			1640028190 +	TO-0116	TO-0117-1	TO-23
RAV4(01-05) 2.0/2.4L				TO-0116	TO-0118	TO-23
RAV4(01-05) 2.0/2.4L				TO-0116	TO-0119	TO-24
RAV4(06-)				TO-0420	TO-0421	TO-72
RAV4(06-14) 2.5/3.5L	2893		1640031430	TO-0274	TO-0275	TO-51
RAV4(06-14) 2.5/3.5L	2893		1640031430	TO-0274	TO-0275-1	TO-51
RAV4(06-14) 2.5/3.5L	2891 +		1640031420 +	TO-0276	TO-0277	TO-52
RAV4(15-)				TO-0860	TO-0861	TO-144
SEQUOIA(00-06) 4.7L	2321 +		164000F030	TO-0381	TO-0382	TO-67
SEQUOIA(08-09) 4.7L	2992 +			TO-0587	TO-0588	TO-97
SEQUOIA(08-13) 4.6/5.7L	2994		1640005010 +	TO-0528	TO-0529	TO-89
SIENNA(98-03) 3.0L	2153 +		164000A071 +	TO-0282	TO-0283	TO-53
SIENNA(98-03) 3.0L	2153 +		164000A071 +	TO-0282	TO-0284	TO-53
SIENNA(04-06) 3.3L	2681			TO-0596	TO-0597	TO-99
SIENNA(05-06) 3.3L	2925		160410A380	TO-0365	TO-0366	TO-65
SIENNA(07-10) 3.5L	13076		160410P201	TO-0591	TO-0593	TO-98
SIENNA(11-14) 2.7/3.5L	13116		160410P210 +	TO-0375	TO-0376	TO-66
SIENTA 1.5L				TO-0645	TO-0288	TO-105
SPORTS VAN(96-) 2.0L		64795A +	164007A260 +	TO-0037	TO-0038	TO-9
SPORTS VAN(96-) 2.2L		64797A	164006A180 +	TO-0152	TO-0153	TO-29
SOLARA(99-01) 2.2L	1909		164007A300 +	TO-0039	TO-0040	TO-10
SOLARA(99-01) 2.2L	2005		1640003150 +	TO-0041	TO-0040	TO-10
SOLARA(99-01) 3.0L	1910 +	647541	164000A200 +	TO-0054	TO-0055	TO-12
SOLARA(99-01) 3.0L				TO-0054	TO-0056	TO-12
SOLARA(02-03) 2.4L	2623		16400H040 +	TO-0349	TO-0350	TO-62
SOLARA(02-08) 3.0/3.3L	2434 +		164002270 +	TO-0126	TO-0127	TO-25
SOLARA(04-08) 2.4L	2436		1640020270	TO-0125	TO-0124	TO-25
SOULUNA(02-)				TO-0553	TO-0554	TO-93
SRARLET(84-89)			1640010011/0	TO-0662	TO-0663	TO-108
STARLET(89-96)				TO-0808	TO-0732	TO-135
T100(93-98) 2.7/3.0/3.4L	1512 +		1640065130 +	TO-0585	TO-0586	TO-97
TACOMA(95-04) 2.4/2.7/3.4L	1755 +		1641007060	TO-0345	TO-0346	TO-62
TACOMA(05-14) 2.7/4.0L	2802		164100C180 +	TO-0323	TO-0324	TO-59
TERCEL(87-88) 1.5L	109		1640011120 +	TO-0063	TO-0064	TO-14
TERCEL(91-94) 1.5L	1319		1640011460 +	TO-0148	TO-0149	TO-28
TERCEL(91-94) 1.5L	1319		1640011460 +	TO-0148	TO-0149-1	TO-29
TERCEL(91-94)1.5L	1381			TO-0802	TO-0803	TO-134
TERCEL(91-94)1.5L	1381			TO-0802	TO-0814	TO-137
TERCEL(97-99) 1.5L	1758		1640011640 +	TO-0101	TO-0102	TO-21
TERCEL(97-99) 1.5L	1750		1640011650 +	TO-0103	TO-0102	TO-21
TOWNACE NORA（96-）			164006A120	TO-0834	TO-0835	TO-140
TOWNACE NORA（96-）			164006A130	TO-0836	TO-0835	TO-140
TOWNACE NORA（96-）				TO-0837	TO-0835	TO-140
TOWNACE NOAH（96-98）			164007A380 +	TO-0868	TO-0159	TO-145
TOWNACE(99-)			1640013670	TO-0390	TO-0391	TO-68
TOWNACE			164006A140 +	TO-0155	TO-0156	TO-30
TOWNACE			164006A220	TO-0157	TO-0156	TO-30
TOWNACE			164007A380 +	TO-0158	TO-0159	TO-30
TOWNACE			1640013600 +	TO-0158	TO-0159-1	TO-30
TUNDRA(00-06) 3.4/4.0L	2320	69462	1641007070 +	TO-0383	TO-0384	TO-67

Model	DPI	NISSENS	OEM	Hongyan		Page
TUNDRA(00-06) 4.7L	2321 +		164000F030	TO-0381	TO-0382	TO-67
TUNDRA(07-09)				TO-0610	TO-0611	TO-101
TUNDRA(07-09)				TO-0612	TO-0613	TO-101
TUNDRA(07-13) 4.0/4.7L	2992 +			TO-0587	TO-0588	TO-97
TUNDRA(07-13) 4.6/5.7L	2994		1640005010 +	TO-0528	TO-0529	TO-89
VELLFIRE(08-)			1640031590	TO-0583	TO-0584	TO-97
VENZA(03-)			16400BZ020	TO-0402	TO-0403	TO-70
VENZA(09-14) 3.5L	2817 +		1640031520 +	TO-0130	TO-0131	TO-26
VENZA(09-14) 3.5L	13035		1640031520	TO-0132	TO-0131	TO-26
VENZA(09-15)	13090 +			TO-0749	TO-0750	TO-125
VERSO(08-) 1.8L		64692	164000D400	TO-0360	TO-0361	TO-64
VIOS(02-)			1640002420 +	TO-0112	TO-0113	TO-22
VIOS(13-)1.5L				TO-0641	TO-0642	TO-105
VIOS			164000M030 +	TO-0114	TO-0115	TO-23
VITZ(07-12) 1.5L			1640021260 +	TO-0297	TO-0298	TO-55
YARIS(05-10)1.0/1.3L		64671A	1640023170	TO-0295	TO-0809	TO-136
YARIS(06-14) 1.5L	2890 +		1640021270 +	TO-0295	TO-0296	TO-54
YARIS(06-)				TO-0751	TO-0752	TO-125
YARIS(07-12) 1.5			1640021260 +	TO-0297	TO-0298	TO-55
YARIS(10-)				TO-0482	TO-0483	TO-82
YARIS(12-)			164000Y400	TO-0484	TO-0485	TO-82
YARIS(14-)				TO-0631	TO-0632	TO-104
YARIS				TO-0831	TO-0832	TO-139
WISH				TO-0699	TO-0700	TO-117
TOYOTA（89-96）		64843	1640011310	TO-0728	TO-0729	TO-122
TOYOTA（89-96）				TO-0730	TO-0729	TO-122
TOYOTA（92-00）	1305 1855			TO-0733	TO-0734	TO-123
TOYOTA（99-01）			1640075220	TO-0718	TO-0719	TO-120
TOYOTA（96-99)		64473		TO-0731	TO-0732	TO-122
TOYOTA（99-01）			1640075220	TO-0718	TO-0727	TO-122
TOYOTA(00-06)	2322		1641007070	TO-0761	TO-0762	TO-127
TOYOTA(02-03)			1640021210	TO-0701	TO-0136	TO-118
TOYOTA（02-）				TO-0720	TO-0721	TO-120
TOYOTA(15-）				TO-0858	TO-0859	TO-143
TOYOTA			1640028100	TO-0045	TO-0046	TO-11
TOYOTA			1640023100	TO-0047	TO-0046	TO-11
TOYOTA				TO-0048	TO-0046	TO-11
TOYOTA				TO-0072	TO-0074	TO-16
TOYOTA			1640073530 +	TO-0078	TO-0079	TO-16
TOYOTA				TO-0080	TO-0079	TO-17
TOYOTA			1640046040	TO-0087	TO-0088	TO-19
TOYOTA			164005B400	TO-0089	TO-0090	TO-19
TOYOTA			164005B090	TO-0091	TO-0090-1	TO-19
TOYOTA			1640046150	TO-0094	TO-0095	TO-20
TOYOTA				TO-0096	TO-0095	TO-20
TOYOTA				TO-0121	TO-0117	TO-24
TOYOTA			1640021100 +	TO-0135	TO-0136	TO-26
TOYOTA			1640001170 +	TO-0137	TO-0138	TO-27
TOYOTA			1640075230 +	TO-0174	TO-0175	TO-33
TOYOTA			1640022050 +	TO-0240	TO-0241	TO-45
TOYOTA				TO-0244	TO-0243	TO-46

Model	DPI	NISSENS	OEM	Hongyan		Page
TOYOTA				TO-0246	TO-0222	TO-46
TOYOTA				TO-0247	TO-0222	TO-46
TOYOTA			1644174680	TO-0254	TO-0255	TO-48
TOYOTA				TO-0256	TO-0257	TO-48
TOYOTA				TO-0258	TO-0257-1	TO-48
TOYOTA				TO-0259	TO-0260	TO-48
TOYOTA				TO-0259	TO-0260-1	TO-49
TOYOTA			1640005160	TO-0268	TO-0269	TO-50
TOYOTA				TO-0268	TO-0270	TO-50
TOYOTA			164000N011	TO-0285	TO-0286	TO-53
TOYOTA			1640023090 +	TO-0291	TO-0292	TO-54
TOYOTA				TO-0293	TO-0294	TO-54
TOYOTA				TO-0333	TO-0334	TO-60
TOYOTA				TO-0335	TO-0336	TO-60
TOYOTA				TO-0339	TO-0340	TO-61
TOYOTA				TO-0347	TO-0348	TO-62
TOYOTA				TO-0397	TO-0398	TO-69
TOYOTA				TO-0397	TO-0399	TO-70
TOYOTA				TO-0400	TO-0401	TO-70
TOYOTA			16400B5120 +	TO-0414	TO-0415	TO-72
TOYOTA				TO-0422	TO-0423	TO-73
TOYOTA				TO-0424	TO-0425	TO-73
TOYOTA				TO-0426	TO-0427	TO-73
TOYOTA				TO-0428	TO-0429	TO-73
TOYOTA				TO-0428	TO-0429-1	TO-74
TOYOTA				TO-0430	TO-0431	TO-74
TOYOTA				TO-0432	TO-0433	TO-74
TOYOTA				TO-0434	TO-0435	TO-74
TOYOTA				TO-0436	TO-0437	TO-75
TOYOTA				TO-0438	TO-0439	TO-75
TOYOTA				TO-0440	TO-0441	TO-75
TOYOTA				TO-0442	TO-0443	TO-75
TOYOTA				TO-0444	TO-0445	TO-76
TOYOTA				TO-0446	TO-0447	TO-76
TOYOTA	2690			TO-0448	TO-0449	TO-76
TOYOTA				TO-0379	TO-0450	TO-76
TOYOTA				TO-0451	TO-0452	TO-77
TOYOTA				TO-0453	TO-0380	TO-77
TOYOTA				TO-0454	TO-0455	TO-77
TOYOTA				TO-0456	TO-0457	TO-77
TOYOTA				TO-0458	TO-0459	TO-78
TOYOTA				TO-0460	TO-0461	TO-78
TOYOTA				TO-0465	TO-0466	TO-79
TOYOTA				TO-0465	TO-0467	TO-79
TOYOTA				TO-0472	TO-0473	TO-80
TOYOTA				TO-0472	TO-0474	TO-80
TOYOTA				TO-0472	TO-0475	TO-80
TOYOTA				TO-0104	TO-0479	TO-81
TOYOTA				TO-0563	TO-0564	TO-94
TOYOTA				TO-0565	TO-0564	TO-94
TOYOTA				TO-0577	TO-0578	TO-96

Model	DPI	NISSENS	OEM	Hongyan		Page
TOYOTA				TO-0579	TO-0580	TO-96
TOYOTA				TO-0589	TO-0590	TO-98
TOYOTA				TO-0594	TO-0595	TO-98
TOYOTA				TO-0600	TO-0601	TO-99
TOYOTA				TO-0602	TO-0603	TO-99
TOYOTA				TO-0604	TO-0601	TO-100
TOYOTA				TO-0605	TO-0603	TO-100
TOYOTA				TO-0606	TO-0607	TO-100
TOYOTA				TO-0629	TO-0630	TO-103
TOYOTA				TO-0643	TO-0644	TO-105
TOYOTA				TO-0664	TO-0665	TO-109
TOYOTA				TO-0679	TO-0680	TO-111
TOYOTA			1640072130	TO-0681	TO-0682	TO-111
TOYOTA				TO-0684	TO-0685	TO-111
TOYOTA				TO-0094	TO-0692	TO-113
TOYOTA				TO-0704	TO-0705	TO-118
TOYOTA				TO-0704	TO-0706	TO-118
TOYOTA				TO-0735	TO-0736	TO-123
TOYOTA				TO-0737	TO-0738	TO-123
TOYOTA				TO-0754	TO-0755	TO-126
TOYOTA				TO-0757		TO-126
TOYOTA				TO-0759		TO-127
TOYOTA				TO-0784	TO-0785	TO-131
TOYOTA				TO-0786	TO-0787	TO-131
TOYOTA				TO-0789	TO-0790	TO-132
TOYOTA				TO-0351	TO-0791	TO-132
TOYOTA				TO-0821	TO-0822	TO-138
TOYOTA				TO-0823	TO-0824	TO-138
TOYOTA				TO-0728	TO-0826	TO-138
TOYOTA				TO-0847	TO-0195	TO-142
TOYOTA				TO-0850		TO-142
TOYOTA				TO-0863		TO-144
TOYOTA				TO-0870		TO-145
TOYOTA				TO-0872	TO-0873	TO-146
TOYOTA				TO-0874	TO-0875	TO-146

VOLVO						
240(90-93)	83 +	65480 +		VO-0018	VO-0019	VO-4
740(87-92) 2.3L	1577 +	65537A	3547155 +	VO-0012	VO-0013	VO-3
740(87-92) 2.3L				VO-0012	VO-0014	VO-3
850(93-97) 2.4L	1851 +	65535A +	86037676 +	VO-0005	VO-0006	VO-1
940(93-95) 2.3L	1577 +	65537A	3547155 +	VO-0012	VO-0013	VO-3
940(93-95) 2.3L				VO-0012	VO-0014	VO-3
960(92-97) 2.5/2.9L		65530A +	1397561 +	VO-0009	VO-0010	VO-2
960(92-97) 2.5/2.9L				VO-0009	VO-0010-1	VO-2
960(92-97) 2.9L	1738 +		360039070 +	VO-0009	VO-0011	VO-2
960(92-97) 2.9L				VO-0009	VO-0011-1	VO-2
C70(99-05) 2.3/2.4L	2424	65548A	313190563 +	VO-0007	VO-0008	VO-1
S40(00-03) 1.9L	2400		86020650 +	VO-0015	VO-0016	VO-3
S40(00-03) 1.9L		65551A	8602116 +	VO-0015	VO-0017	VO-3
S40(06-12) 1.6L		69256	1305492 +	MA-0069	MA-0070	MA-11

Model	DPI	NISSENS	OEM	Hongyan		Page
S60(01-09) 2.0/2.4/2.5L	2804 +	65553A +	360024079 +	VO-0001	VO-0002	VO-1
S70(98-00) 2.4L	1851 +	65535A +	86037676 +	VO-0005	VO-0006	VO-1
S70(99-00) 2.3L	2424	65548A	313190563 +	VO-0007	VO-0008	VO-1
S80(99-06) 2.8/2.9L	2804 +	65553A +	360024079 +	VO-0001	VO-0002	VO-1
S90(97-98) 2.5/2.9L		65530A +	1397561 +	VO-0009	VO-0010	VO-2
S90(92-97) 2.5/2.9L				VO-0009	VO-0010-1	VO-2
S90(92-97) 2.9L	1738 +		360039070 +	VO-0009	VO-0011	VO-2
S90(92-97) 2.9L				VO-0009	VO-0011-1	VO-2
V70(98-00) 2.4L	1851 +	65535A +	86037676 +	VO-0005	VO-0006	VO-1
V70(99-04) 2.3/2.4L	2424	65548A	313190563 +	VO-0007	VO-0008	VO-1
V70(04-07) 2.4L	2804 +	65553A +	360024079 +	VO-0001	VO-0002	VO-1
V40(00-04) 1.9L	2400		86020650 +	VO-0015	VO-0016	VO-3
V40(00-04) 1.9L		65551A	8602116 +	VO-0015	VO-0017	VO-3
V90(97-98) 2.5/2.9L		65530A +	1397561 +	VO-0009	VO-0010	VO-2
V90(92-97) 2.5/2.9L				VO-0009	VO-0010-1	VO-2
V90(92-97) 2.9L	1738 +		360039070 +	VO-0009	VO-0011	VO-2
V90(92-97) 2.9L				VO-0009	VO-0011-1	VO-2
XC90 2.5/3.2/4.4L	2878	65613A	312935505	VO-0003	VO-0004	VO-1
VOLVO				VO-0020	VO-0021	VO-4

VOLKSWAGEN						
ALTEA(04-) 1.2/1.4/1.6/2.0L		65277A	1K0121251P +	AU-0027	AU-0028	AU-5
AMAROK(10-15) 2.0L		65298	2H0121253A	VW-0103	VW-0104	VW-17
AMAROK(10-15) 2.0L				VW-0105	VW-0106	VW-17
BEETLE(99-11) 1.9/1.8/2.0L	2241 +	65228	0K2A615200G/J +	VW-0012	VW-0013	VW-2
CABRIOLET(92-93) 1.8L	1557	65266	1HM121253A/C/K/Q/R	VW-0010	VW-0011	VW-2
CABRIOLET(92-93) 1.8L				VW-0062	VW-0063	VW-10
CABRIO(95-02) 2.0L	1557	65266	1HM121253A/C/K/Q/R	VW-0010	VW-0011	VW-2
CABRIO(95-02) 2.0L				VW-0062	VW-0063	VW-10
CADDY(00-03)		67301 +	6K0121253AG/BC/AM	VW-0090	VW-0091	VW-15
CADDY(00-03)				VW-0092	VW-0091	VW-15
CLASICO(11-15) 2.0L	2265 +	652011	1E0121253 +	VW-0014	VW-0015	VW-3
CLASICO(11-15) 2.0L				VW-0016	VW-0015	VW-3
CLASICO(11-15) 2.0L				VW-0017	VW-0015	VW-3
CLASICO(11-15) 2.0L				VW-0018	VW-0015	VW-3
CLASICO(11-15) 2.0L				VW-0014	VW-0034	VW-7
CC(09-15) 1.9L		65280A	1K0121251AA +	VW-0028	VW-0029	VW-6
CC(09-15) 1.9L				VW-0030	VW-0029	VW-6
CC(11-15) 1.9L		65279A	1K0121251BB/CS +	VW-0024	VW-0025	VW-5
CC(11-15) 1.9L				VW-0026	VW-0025	VW-5
DERBY(02-07)		652691 +	6Q0121253AE/G +	VW-0019	VW-0020	VW-3
DERBY(02-07)				VW-0021	VW-0020	VW-3
DERBY(02-07)				VW-0022	VW-0020	VW-3
DERBY(02-07)				VW-0023	VW-0020	VW-3
EOS（05-）					VW-0128	VW-20
EOS(06-) 3.2/3.6L		65308	1K0121251K +	VW-0049	VW-0050	VW-9
EOS(09-11) 2.0L	2822	65281A	1K0121251AB +	VW-0039	VW-0040	VW-7
EUROVAN(93-04) 1.5L	2098	65273A	701121253F +	VW-0035	VW-0036	VW-7
EUROVAN(03-09)1.9/2.0/3.2L		65282A	7H0121253H/M	VW-0047	VW-0048	VW-8
FOX(05-)				VW-0069	VW-0070	VW-12
FOX(05-)				VW-0071	VW-0070	VW-12

Model	DPI	NISSENS	OEM	Hongyan		Page
FOX(05-10)		652691 +	6Q0121253AE/G +	VW-0019	VW-0020	VW-3
FOX(05-10)				VW-0021	VW-0020	VW-3
FOX(05-10)				VW-0022	VW-0020	VW-3
FOX(05-10)				VW-0023	VW-0020	VW-3
GOLF(92-97) 1.4/1.6/1.8L		652451 +	1H0121253CB +	VW-0007	VW-0008	VW-2
GOLF(92-97) 1.4/1.6/1.8L				VW-0009	VW-0008	VW-2
GOLF(93-98) 1.8L	1622		1H0121253AK +	VW-0001	VW-0002	VW-1
GOLF(93-98) 1.8L				VW-0003	VW-0002	VW-1
GOLF(93-98) 1.6/1.8L		652471 +	1H0121253BA/D/K/M	VW-0004	VW-0005	VW-1
GOLF(93-98) 1.6/1.8L				VW-0004	VW-0006	VW-1
GOLF(93-98) 1.8/1.9/2.0L	1557	65266	1HM121253A/C/K/Q/R	VW-0010	VW-0011	VW-2
GOLF(93-98) 1.8/1.9/2.0L				VW-0062	VW-0063	VW-10
GOLF(95-97)2.8L	2094			VW-0143	VW-0144	VW-22
GOLF(00-07) 2.0L	2265 +	652011	1E0121253 +	VW-0014	VW-0015	VW-3
GOLF(00-07) 2.0L				VW-0016	VW-0015	VW-3
GOLF(00-07) 2.0L				VW-0017	VW-0015	VW-3
GOLF(00-07) 2.0L				VW-0018	VW-0015	VW-3
GOLF(00-07) 2.0L				VW-0014	VW-0034	VW-7
GOLF(03-15) 1.9L		65280A	1K0121251AA +	VW-0028	VW-0029	VW-6
GOLF(03-15) 1.9L				VW-0030	VW-0029	VW-6
GOLF(05-) 1.4/1.6/2.0L		65277A	1K0121251P +	AU-0027	AU-0028	AU-5
GOLF(07-15)1.4L T		65294	1K0121251BN	VW-0112	VW-0113	VW-18
GOLF(09-15) 1.9L		65279A	1K0121251BB/CS +	VW-0024	VW-0025	VW-5
GOLF(09-15) 1.9L				VW-0026	VW-0025	VW-5
GOLF(12-)		65328	5Q0121251FB	VW-0110	VW-0111	VW-18
GOLF(12-)		65328	5Q0121251FB	VW-0110	VW-0111-1	VW-18
GOLF(14-) 1.6L				VW-0123	VW-0124	VW-20
GOLF(15-)			5Q0121251EQ	VW-0135	VW-0136	VW-21
GOL(87-94)				VW-0088	VW-0089	VW-15
GOL(87-94)				VW-0093	VW-0094	VW-15
GOL(95-08)				VW-0085	VW-0087	VW-14
GOL(97-08)				VW-0085	VW-0086	VW-14
GOL				VW-0079	VW-0080	VW-13
GOL				VW-0079	VW-0081	VW-13
GOL				VW-0082	VW-0083	VW-14
GOL				VW-0082	VW-0084	VW-14
LT(96-06) 2.3/2.5/2.8L		65231A	2D0121253 +	VW-0095	VW-0096	VW-16
JETTA(85-90)				VW-0059	VW-0060	VW-10
JETTA(85-90)				VW-0061	VW-0060	VW-10
JETTA(85-90)				VW-0064	VW-0065	VW11
JETTA(85-90)				VW-0066	VW-0065	VW11
JETTA(85-90)				VW-0068	VW-0065	VW11
JETTA(93-95) 1.8L	1622		1H0121253AK +	VW-0001	VW-0002	VW-1
JETTA(93-95) 1.8L				VW-0003	VW-0002	VW-1
JETTA(93-95) 1.6/1.8L		652471 +	1H0121253BA/D/K/M	VW-0004	VW-0005	VW-1
JETTA(93-95) 1.6/1.8L				VW-0004	VW-0006	VW-1
JETTA(94-98)2.8L	2094			VW-0143	VW-0144	VW-22
JETTA(05-) 2.5L		65308	1K0121251K +	VW-0049	VW-0050	VW-9
JETTA(05-)					VW-0128	VW-20
JETTA(05-15)1.9L		65280A	1K0121251AA +	VW-0028	VW-0029	VW-6
JETTA(05-15)1.9L				VW-0030	VW-0029	VW-6

Model	DPI	NISSENS	OEM	Hongyan		Page
JETTA(06-) 2.5L		65277A	1K0121251P +	AU-0027	AU-0028	AU-5
JETTA(08-15)1.9L		65279A	1K0121251BB/CS +	VW-0024	VW-0025	VW-5
JETTA(08-15)1.9L				VW-0026	VW-0025	VW-5
JETTA(10-15）1.4LT	13273	65017	1K0121251EB	VW-0125	VW-0126	VW-20
KOMBI(03-09) 2.5L		65283A	7H0121253G +	VW-0045	VW-0046	VW-8
KOMBI(03-09) 1.9/2.0/3.2L		65282A	7H0121253H/M	VW-0047	VW-0048	VW-8
LEON(05-) 1.4/1.6L		65277A	1K0121251P +	AU-0027	AU-0028	AU-5
MULTIVAN(03-09) 2.5L		65283A	7H0121253G +	VW-0045	VW-0046	VW-8
MULTIVAN(03-09) 1.9/2.0/3.2L		65282A	7H0121253H/M	VW-0047	VW-0048	VW-8
PARATI(87-94)				VW-0088	VW-0089	VW-15
PARATI(87-94)				VW-0093	VW-0094	VW-15
PARATI(95-08)				VW-0085	VW-0087	VW-14
PARATI(97-08)				VW-0085	VW-0086	VW-14
PASSAT(91-95) 1.4/1.6/1.8L		652451 +	1H0121253CB +	VW-0007	VW-0008	VW-2
PASSAT(91-95) 1.4/1.6/1.8L				VW-0009	VW-0008	VW-2
PASSAT(93-97) 1.8/2.0L		65253	3A0121253AA	VW-0037	VW-0038	VW-7
PASSAT(98-05) 1.8/2.0L	2034	60229 +	BD0121251BC	AU-0001	AU-0004	AU-1
PASSAT(98-05) 2.8L	2648		8D0121251B	AU-0005	AU-0006	AU-1
PASSAT(98-05) 2.8L				AU-0007	AU-0006	AU-2
PASSAT(98-05) 2.8L				AU-0005	AU-0008	AU-2
PASSAT(05-) 2.5L		65309	1K0121253BJ	VW-0051	VW-0052	VW-9
PASSAT（05-）					VW-0128	VW-20
PASSAT(05-15) 1.9L		65280A	1K0121251AA +	VW-0028	VW-0029	VW-6
PASSAT(05-15) 1.9L				VW-0030	VW-0029	VW-6
PASSAT(10-) 3.2/3.6L		65308	1K0121251K +	VW-0049	VW-0050	VW-9
PASSAT（13-15）2.0LT	13273	65017	1K0121251EB	VW-0125	VW-0126	VW-20
POLO(91-95) 1.4/1.6/1.8L		652451 +	1H0121253CB +	VW-0007	VW-0008	VW-2
POLO(91-95) 1.4/1.6/1.8L				VW-0009	VW-0008	VW-2
POLO(01-09)		652691 +	6Q0121253AE/G +	VW-0019	VW-0020	VW-3
POLO(01-09)				VW-0021	VW-0020	VW-3
POLO(01-09)				VW-0022	VW-0020	VW-3
POLO(01-09)				VW-0023	VW-0020	VW-3
POLO(01-09)				VW-0019	VW-0078	VW-13
POLO(01-)1.2/1.4/1.6L		65289A	6Q0121253J	VW-0117	VW-0118	VW-19
POLO(09-15)		640012	6R0121253 +	VW-0055	VW-0056	VW-9
POLO(09-15)				VW-0076	VW-0077	VW-13
SANTANA(85-90)				VW-0059	VW-0060	VW-10
SANTANA(85-90)				VW-0061	VW-0060	VW-10
SAVEIRO(87-94)				VW-0088	VW-0089	VW-15
SAVEIRO(87-94)				VW-0093	VW-0094	VW-15
SAVEIRO(95-08)				VW-0085	VW-0087	VW-14
SAVEIRO(97-08)				VW-0085	VW-0086	VW-14
SHATAN(09-15) 1.4/2.0L	13272	65015	5N0121253L	VW-0072	VW-0073	VW-12
TIGUAN(09-15) 1.4/2.0L	13272	65015	5N0121253L	VW-0072	VW-0073	VW-12
TIGUAN（09-15）1.4/2.0L	13272	65015	5N0121253L	VW-0072	VW-0140	VW-22
TIGUAN				VW-0121	VW-0122	VW-19
TOUAREG(10-15) 3.0/3.6L		65297	7P0121253A +	VW-0097	VW-0098	VW-16
TOUAREG(10-15) 3.0/3.6L				VW-0099	VW-0100	VW-16
TRANSPORTER(85-94) 1.9/2.1/2.5L	357	65239	068121253B/C/D/E	VW-0031	VW-0032	VW-6
TRANSPORTER(85-94) 1.9/2.1/2.5L				VW-0031	VW-0033	VW-6
TRANSPORTER(03-09) 1.9/2.0/3.2L			7H0121253F/K	VW-0043	VW-0044	VW-8

Model	DPI	NISSENS	OEM	Hongyan		Page
TRANSPORTER(03-09) 2.5L		65283A	7H0121253G +	VW-0045	VW-0046	VW-8
TRANSPORTER(03-09) 1.9/2.0/3.2L		65282A	7H0121253H/M	VW-0047	VW-0048	VW-8
VANAGON(80-91) 1.9/2.0/2.1L	357	65239	068121253B/C/D/E	VW-0031	VW-0032	VW-6
VANAGON(80-91) 1.9/2.0/2.1L				VW-0031	VW-0033	VW-6
VENTO(10-15)		640012	6R0121253 +	VW-0055	VW-0056	VW-9
VENTO(10-15)				VW-0076	VW-0077	VW-13
VOLKSWAGEN				VW-0024	VW-0027	VW-5
VOLKSWAGEN				VW-0026	VW-0027	VW-5
VOLKSWAGEN				VW-0041	VW-0042	VW-8
VOLKSWAGEN				VW-0075	VW-0075	VW-12
VOLKSWAGEN				VW-0101	VW-0102	VW-16
VOLKSWAGEN				VW-0107	VW-0108	VW-17
VOLKSWAGEN				VW-0109	VW-0110	VW-17
VOLKSWAGEN				VW-0114	VW-0115	VW-18
VOLKSWAGEN				VW-0116	VW-0115	VW-19
VOLKSWAGEN				VW-0119	VW-0120	VW-19
VOLKSWAGEN			7E0121253A	VW-0141	VW-0142	VW-22
VOLKSWAGEN				VW-0131	VW-0132	VW-21
VOLKSWAGEN				VW-0133	VW-0134	VW-21
VOLKSWAGEN		65293		VW-0137	VW-0138	VW-21
VOLKSWAGEN		65293		VW-0139	VW-0138	VW-22

CHINESE CAR						
AN CHI				GCH-0126	GCH-0127	GCH-18
CHANG AN				GCH-0001	GCH-0002	GCH-1
CHANG AN				GCH-0077	GCH-0078	GCH-12
CHANG AN				GCH-0101	GCH-0102AT/MT	GCH-15
CHANG AN BENBEN				GCH-0050	GCH-0051	GCH-8
CHANG AN BENBEN				GCH-0050	GCH-0052	GCH-8
CHANG CHENG H6(GAS)				GCH-0041	GCH-0042	GCH-7
CHANG CHENG H6(DIESEL)				GCH-0041	GCH-0043	GCH-7
CHANG CHENG PICK UP				GCH-0044	GCH-0045	GCH-7
CHANG CHENG XUANLI 1.5L				GCH-0046	GCH-0047	GCH-8
CHANG CHENG XUANLI 1.3L				GCH-0048	GCH-0049	GCH-8
DFAC				GCH-0081	GCH-0082	GCH-12
HAIMA FUSHIDA				GCH-0079	GCH-0080	GCH-12
HAFEI				GCH-0053	GCH-0054	GCH-9
HAFEI ZHONGYI				GCH-0055	GCH-0056	GCH-9
HAFEI MINYI				GCH-0057	GCH-0058	GCH-9
JUNMA				GCH-0124	GCH-0125	GCH-18
LIFT				GCH-0003	GCH-0004	GCH-1
LIFT				GCH-0005	GCH-0006	GCH-1
LIFT				GCH-0005	GCH-0007	GCH-1
LUXGEN S5				GCH-0059	GCH-0060	GCH-9
LUXGEN MPV				GCH-0061	GCH-0062	GCH-10
LUXGEN LC				GCH-0063	GCH-0064	GCH-10
LUXGEN U6（14-）			U0717010200	GCH-0107	GCH-0060	GCH-16
KUBOTA				GCH-0031	GCH-0032	GCH-5
KUBOTA				GCH-0031	GCH-0033	GCH-6
KUBOTA				GCH-0031	GCH-0034	GCH-6
SGMW				GCH-0083	GCH-0084	GCH-13

Model	DPI	NISSENS	OEM	Hongyan		Page
SGMW				GCH-0083	GCH-0085	GCH-13
SGMW				GCH-0086	GCH-0087	GCH-13
SGMW				GCH-0088	GCH-0087	GCH-13
ZHONGHUA FRV				GCH-0072	GCH-0073	GCH-11
ZHONGXING PICK UP				GCH-0132	GCH-0133	GCH-19
ZHONGXING PICK UP				GCH-0134	GCH-0135	GCH-19
CHINESE CAR				GCH-0008	GCH-0009	GCH-2
CHINESE CAR				GCH-0010	GCH-0011	GCH-2
CHINESE CAR				GCH-0012	GCH-0013	GCH-2
CHINESE CAR				GCH-0014	GCH-0015	GCH-2
CHINESE CAR				GCH-0014	GCH-0016	GCH-3
CHINESE CAR				GCH-0014	GCH-0017	GCH-3
CHINESE CAR				GCH-0014	GCH-0018	GCH-3
CHINESE CAR				GCH-0019	GCH-0020	GCH-3
CHINESE CAR				GCH-0021	GCH-0022	GCH-4
CHINESE CAR				GCH-0023	GCH-0022	GCH-4
CHINESE CAR				GCH-0024	GCH-0025	GCH-4
CHINESE CAR				GCH-0026	GCH-0027	GCH-4
CHINESE CAR				GCH-0035	GCH-0036	GCH-6
CHINESE CAR				GCH-0037	GCH-0038	GCH-6
CHINESE CAR				GCH-0039	GCH-0040	GCH-7
CHINESE CAR				GCH-0065	GCH-0066	GCH-10
CHINESE CAR				GCH-0067	GCH-0068	GCH-10
CHINESE CAR				GCH-0067	GCH-0069	GCH-11
CHINESE CAR				GCH-0070	GCH-0071	GCH-11
CHINESE CAR				GCH-0074	GCH-0075	GCH-11
CHINESE CAR				GCH-0074	GCH-0076	GCH-12
CHINESE CAR				GCH-0089	GCH-0090	GCH-14
CHINESE CAR				GCH-0091	GCH-0092	GCH-14
CHINESE CAR				GCH-0093	GCH-0094	GCH-14
CHINESE CAR				GCH-0095	GCH-0096	GCH-14
CHINESE CAR				GCH-0097	GCH-0098	GCH-15
CHINESE CAR				GCH-0116	GCH-0117	GCH-17
CHINESE CAR				GCH-0118	GCH-0119	GCH-17
CHINESE CAR				GCH-0120	GCH-0121	GCH-18
CHINESE CAR				GCH-0122	GCH-0123	GCH-18
CHINESE CAR				GCH-0128	GCH-0129	GCH-19
CHINESE CAR				GCH-0130	GCH-0131	GCH-19
CHINESE CAR				GCH-0136	GCH-0137	GCH-20
CHINESE CAR				GCH-0148	GCH-0149	GCH-21
CHINESE CAR				GCH-0150	GCH-0151	GCH-21
CHINESE CAR				GCH-0152	GCH-0153	GCH-22
CHINESE CAR				GCH-0154	GCH-0155	GCH-22
CHINESE CAR				GCH-0156	GCH-0157	GCH-22
CHINESE CAR				GCH-0156	GCH-0158	GCH-22
CHINESE CAR				GCH-0159	GCH-0160	GCH-23
CHINESE CAR				GCH-0161	GCH-0162	GCH-23
CHINESE CAR				GCH-0163	GCH-0164	GCH-23
CHINESE CAR				GCH-0165	GCH-0166	GCH-23
CHINESE CAR				GCH-0167	GCH-0168	GCH-24
CHINESE CAR				GCH-0169	GCH-0170	GCH-24

Model	DPI	NISSENS	OEM	Hongyan		Page
CHINESE CAR				GCH-0169	GCH-0171	GCH-24
CHINESE CAR				GCH-0172	GCH-0173	GCH-24
CHINESE CAR				GCH-0174	GCH-0175	GCH-25
CHINESE CAR				GCH-0176	GCH-0177	GCH-25
CHINESE CAR				GCH-0178	GCH-0179	GCH-25
CHINESE CAR				GCH-0180	GCH-0177	GCH-25
CHINESE CAR				GCH-0181	GCH-0182	GCH-26
CHINESE CAR				GCH-0183	GCH-0184	GCH-26
CHINESE CAR				GCH-0183	GCH-0185	GCH-26
CHINESE CAR				GCH-0186	GCH-0187	GCH-26
CHINESE CAR				GCH-0188	GCH-0189	GCH-27
CHINESE CAR				GCH-0190	GCH-0191	GCH-27
CHINESE CAR				GCH-0192	GCH-0193	GCH-27
CHINESE CAR				GCH-0194	GCH-0195	GCH-27
CHINESE CAR				GCH-0196	GCH-0197	GCH-28
CHINESE CAR				GCH-0198	GCH-0199	GCH-28
CHINESE CAR				GCH-0200	GCH-0201	GCH-28
CHINESE CAR				GCH-0202	GCH-0203	GCH-28
CHINESE CAR				GCH-0206	GCH-0207	GCH-29
CHINESE CAR				GCH-0204	GCH-0205	GCH-29
CHINESE CAR				GCH-0099	GCH-0100	GCH-15
CHINESE CAR				GCH-0103	GCH-0104	GCH-15
CHINESE CAR				GCH-0105	GCH-0106	GCH-16
CHINESE CAR				GCH-0138	GCH-0139	GCH-20
CHINESE CAR				GCH-0140	GCH-0141	GCH-20
CHINESE CAR				GCH-0146	GCH-0147	GCH-21
CHINESE CAR				GCH-0142	GCH-0143	GCH-20
CHINESE CAR				GCH-0110	GCH-0111	GCH-16
CHINESE CAR				GCH-0112	GCH-0113	GCH-17
CHINESE CAR				GCH-0144	GCH-0145	GCH-21
CHINESE CAR				GCH-0204	GCH-0205	GCH-29
CHINESE CAR				GCH-0206	GCH-0207	GCH-29
CHINESE CAR				GCH-0208	GCH-0096	GCH-29
CHINESE CAR				GCH-0209	GCH-0210	GCH-29
CHINESE CAR				GCH-0211	GCH-0212	GCH-30
CHINESE CAR				GCH-0213	GCH-0214	GCH-30
CHINESE CAR				GCH-0215	GCH-0216	GCH-30
CHINESE CAR				GCH-0215	GCH-0217	GCH-30
CHINESE CAR				GCH-0218	GCH-0219	GCH-31
CHINESE CAR				GCH-0220	GCH-0221	GCH-31
CHINESE CAR				GCH-0222	GCH-0223	GCH-31
CHINESE CAR				GCH-0224	GCH-0225	GCH-31
CHINESE CAR				GCH-0226	GCH-0227	GCH-32
CHINESE CAR				GCH-0228	GCH-0227	GCH-32
CHINESE CAR				GCH-0229	GCH-0227	GCH-32
CHINESE CAR			U0841010200 +	GCH-0230	GCH-0231	GCH-32
CHINESE CAR				GCH-0232	GCH-0233	GCH-33
CHINESE CAR				GCH-0232	GCH-0234	GCH-33
CHINESE CAR				GCH-0235	GCH-0236	GCH-33

RADIATOR DPI INTERCHANGE

DPI	INLET	OUTLET	PAGE		DPI	INLET	OUTLET	PAGE
10	HO-0239	HO-0100	HO-40		472	ME-0067	ME-0068	ME-9
19	HO-0009	HO-0010	HO-2		473	ME-0142	ME-0143	ME-19
21	TO-0815	TO-0816	TO-137		490	PO-0003	PO-0004	PO-1
46	NI-0017	NI-0021	NI-8		491	PO-0003	PO-0004	PO-1
48	NI-0013	NI-0014	NI-6		504	GM-0219	GM-0220	GM-42
50	TO-0488	TO-0493	TO-83		508	TO-0097	TO-0098	TO-20
68	CH-0163-1	CH-0164	CH-24		529	TO-0061	TO-0060	TO-13
77	CH-0113	CH-0115	CH-17		532	TO-0788	TO-0076	TO-131
78	CH-0008	CH-0009	CH-2		534	TO-0072	TO-0070	TO-15
83	VO-0018	VO-0019	VO-4		537	TO-0069	TO-0070	TO-14
109	TO-0063	TO-0064	TO-14		538	TO-0647	TO-0648	TO-106
121	CH-0008	CH-0009	CH-2		539	TO-0072	TO-0070	TO-15
126	NI-0228	NI-0229	NI-58		546	FO-0231	FO-0232	FO-37
145	NI-0052	NI-0053	NI-21		548	GM-0219	GM-0220	GM-42
147	TO-0494	TO-0495	TO-83		549	GM-0219	GM-0220	GM-42
157	TO-0065	TO-0066	TO-14		612	GM-0285	GM-0287	GM-53
158	GM-0059	GM-0040	GM-13		616	GM-0063	GM-0050	GM-14
161	GM-0059	GM-0145-1	GM-27		617	GM-0063	GM-0050	GM-14
162	GM-0059	GM-0145-1	GM-27		618	GM-0063	GM-0050	GM-14
178	TO-0099	TO-0100	TO-20		619	GM-0063	GM-0050	GM-14
184	VO-0018	VO-0019	VO-4		620	GM-0063	GM-0050	GM-14
206		GM-0319	GM-58		623		GM-0319	GM-58
213	NI-0228	NI-0229	NI-58		624	GM-0012	GM-0013	GM-3
219	NI-0061	NI-0062	NI-24		658	GM-0098	GM-0162	GM-31
220	NI-0061	NI-0062	NI-24		661	TO-0499	TO-0500	TO-84
221		GM-0319	GM-58		670	ME-0023	ME-0024	ME-4
222	DAI-0012	DAI-0013	DAI-2		671	ME-0132	ME-0133	ME-18
223	NI-0052	NI-0053	NI-21		700	CH-0046	CH-0047	CH-7
227	FO-0035	FO-0036	FO-6		705	GM-0098	GM-0163	GM-32
229	GM-0150	GM-0151	GM-29		726	GM-0059	GM-0060	GM-14
233	MI-0141	MI-0142	MI-26		727	GM-0059	GM-0060	GM-14
234	MI-0223	MI-0222	MI-39		730	GM-0327	GM-0328	GM-59
242	MA-0085	MA-0086	MA-13		741	GM-0100	GM-0101	GM-20
243	MA-0085	MA-0086	MA-13		747	TO-0065	TO-0066	TO-14
247		GM-0319	GM-58		749	GM-0153	GM-0154-1	GM-30
248	MA-0093	MA-0094	MA-14		767	GM-0059	GM-0040	GM-13
263	KI-0095	KI-0097	KI-15		768	GM-0285	GM-0286	GM-53
292	HO-0241	HO-0242	HO-41		769	GM-0037	GM-0040	GM-8
298	BM-0050	BM-0051	BM-9		778	GM-0037	GM-0041	GM-9
314	NI-0054	NI-0053	NI-21		781	GM-0025	GM-0026	GM-5
315	KI-0095	KI-0097	KI-15		788	NI-0230	NI-0231	NI-59
357	VW-0031	VW-0032	VW-6		812	TO-0745	TO-0746	TO-125
434	GM-0063	GM-0050	GM-14		825	BM-0052	BM-0053	BM-10
436	ME-0039	ME-0040	ME-5		829	GM-0149	GM-0036-1	GM-29
438	ME-0033	ME-0034	ME-5		836	TO-0061	TO-0060-1	TO-13
443	ME-0154	ME0155	ME-20		838	BM-0050	BM-0051	BM-9
453	ME-0067	ME-0068	ME-9		842	BM-0052	BM-0053	BM-10
456	FO-0229	FO-0230	FO-36		852	GM-0045-1	GM-0053	GM-12
459	GM-0219	GM-0220	GM-42		853	GM-0045-1	GM-0053	GM-12
470	ME-0134	ME-0135	ME-18		854	GM-0045-1	GM-0052	GM-12

RADIATOR DPI INTERCHANGE

DPI	INLET	OUTLET	PAGE
856	GM-0037	GM-0040	GM-8
862	BM-0052	BM-0053	BM-10
870	TO-0075	TO-0076	TO-16
871	CH-0113	CH-0114	CH-17
881	CH-0159	CH-0160	CH-23
883	CH-0161	CH-0162	CH-24
886	HO-0099	HO-0100	HO-17
890	FO-0167	FO-0168	FO-27
891	FO-0169	FO-0168	FO-27
897	FO-0175	FO-0176	FO-28
901	FO-0201	FO-0202	FO-32
906	BM-0052	BM-0053	BM-10
908	GM-0045-1	GM-0052	GM-12
910	BM-0050	BM-0051	BM-9
914	BM-0050	BM-0051	BM-9
921	GM-0059	GM-0040	GM-13
924	GM-0055	GM-0338	GM-61
928	HO-0119	HO-0120	HO-22
935	SU-0044	SU-0045	SU-7
938	BM-0052	BM-0053	BM-10
939	TO-0097	TO-0098	TO-20
940	BM-0052	BM-0053	BM-10
941	BM-0009	BM-0002	BM-2
942	BM-0009	BM-0002	BM-2
945	TO-0341	TO-0342	TO-61
951	GM-0055	GM-0057	GM-13
952	BM-0009	BM-0002	BM-2
953	GM-0045-1	GM-0053	GM-12
954	GM-0059	GM-0060	GM-14
965	GM-0055	GM-0056	GM-12
967	BM-0063	BM-0064	BM-11
973	BM-0009	BM-0002	BM-2
977	GM-0033	GM-0185	GM-35
978	BM-0001	BM-0002	BM-1
980	CH-0163	CH-0164	CH-24
981	CH-0132	CH-0133	CH-20
1015	CH-0111	CH-0112	CH-17
1040	GM-0025	GM-0026	GM-5
1043	GM-0153	GM-0154-1	GM-30
1046	GM-0037-1	GM-0040	GM-9
1047	GM-0037-1	GM-0040	GM-9
1048	GM-0037	GM-0041	GM-9
1049	GM-0153	GM-0154	GM-30
1053	GM-0037	GM-0040	GM-8
1054	GM-0037-1	GM-0040	GM-9
1056	GM-0037	GM-0040	GM-8
1061	FO-0190	FO-0191	FO-31
1062	FO-0188	FO-0189	FO-30
1063	FO-0201	FO-0202	FO-32
1067	GM-0037	GM-0040	GM-8
1074	GM-0150	GM-0152	GM-29
1077	CH-0175	CH-0176	CH-26
1081	HY-0020		HY-04
1090	AU-0040	AU-0041	AU-7
1092	GM-0055	GM-0057	GM-13
1094	FO-0031	FO-0032	FO-5
1095	FO-0335	FO-0202	FO-52
1108	CH-0146	CH-0147	CH-21
1109	CH-0138	CH-0139	CH-20
1117	IS-0037	IS-0038	IS-6
1118	SUZ-0119	SUZ-0120	SUZ-18
1122	IS-0037	IS-0038	IS-6
1125	CH-0130	CH-0131	CH-19
1127	IS-0006	IS-0007	IS-1
1130	IS-0006	IS-0007	IS-1
1134	MA-0078	MA-0076	MA-12
1135	MA-0077	MA-0076	MA-12
1139	NI-0226	NI-0227	NI-58
1140	MA-0119	MA-0120	MA-18
1145	MI-0128	MI-0129	MI-24
1150	NI-0013	NI-0016	NI-6
1151	NI-0226	NI-0227	NI-58
1152	NI-0001	NI-0002	NI-1
1155	TO-0218	TO-0217	TO-41
1158	NI-0005	NI-0006	NI-2
1163	FO-0031	FO-0032	FO-5
1164	FO-0163	FO-0164	FO-27
1168	SUZ-0001	SUZ-0054	SUZ-9
1173	TO-0144	TO-0145	TO-28
1174	TO-0144	TO-0145	TO-28
1178	NI-0001	NI-0004	NI-1
1183	SU-0021	SU-0022	SU-4
1186	NI-0013	NI-0014	NI-6
1188	HY-0020		HY-04
1190	TO-0488	TO-0489	TO-82
1193	CH-0005	CH-0006	CH-1
1194	CH-0132	CH-0133	CH-20
1204	GM-0059	GM-0040	GM-13
1206	GM-0098	GM-0099	GM-20
1208	GM-0037	GM-0040	GM-8
1210	GM-0029	GM-0145	GM-27
1212	GM-0037	GM-0145	GM-27
1216	GM-0098	GM-0099	GM-20
1218	GM-0017	GM-0019	GM-4
1222	GM-0037	GM-0040	GM-8
1238	GM-0037	GM-0040	GM-8
1241	NI-0019	NI-0021	NI-8
1242	NI-0013	NI-0014	NI-6
1244	MA-0013	MA-0014	MA-3
1250	TO-0065	TO-0066	TO-14

RADIATOR DPI INTERCHANGE

DPI	INLET	OUTLET	PAGE		DPI	INLET	OUTLET	PAGE
1253	GM-0025	GM-0026	GM-5		1381	TO-0802	TO-0803	TO-134
1260	TO-0075	TO-0077	TO-16		1387	CH-0130	CH-0177	CH-26
1261	NI-0230	NI-0231	NI-59		1388	CH-0104	CH-0105	CH-16
1271	CH-0130	CH-0131	CH-19		1390	CH-0010	CH-0011	CH-2
1273	FO-0170	FO-0171	FO-28		1391	CH-0106	CH-0108	CH-16
1276	NI-0017	NI-0026	NI-10		1392	CH-0104	CH-0148	CH-22
1277	HO-0067	HO-0068	HO-12		1393	MI-0013	MI-0014	MI-3
1278	HO-0015	HO-0014	HO-3		1394	CH-0001	CH-0002	CH-1
1279	FO-0029	FO-0030	FO-5		1395	CH-0003	CH-0004	CH-1
1286	HY-0031	HY-0032	HY-06		1396	CH-0003	CH-0004	CH-1
1290	HO-0018	HO-0019	HO-4		1399	HY-0026	HY-0027	HY-05
1298	MI-0003	MI-0002	MI-1		1400	CH-0106	CH-0107	CH-16
1299	MI-0003	MI-0002	MI-1		1401	BM-0013	BM-0012	BM-3
1300	IS-0110		IS-18		1402	MI-0013	MI-0014	MI-3
1302	IS-0011	IS-0012	IS-2		1405	NI-0007	NI-0006	NI-2
1303	TO-0027	TO-0026	TO-6		1407	TO-0146	TO-0147	TO-28
1304	TO-0057	TO-0058	TO-13		1408	TO-0233	TO-0234	TO-44
1305	TO-0733	TO-0734	TO-123		1409	TO-0229	TO-0230	TO-43
1306	TO-0608	TO-0609	TO-100		1410	FO-0335	FO-0202	FO-52
1307	MA-0011	MA-0012	MA-2		1419	HO-0020	HO-0019	HO-4
1310	ME-0070	ME-0071	ME-9		1421	NI-0005	NI-0008	NI-3
1311	ME-0015	ME-0016	ME-3		1422	GM-0087	GM-0088	GM-18
1312	ME-0017	ME-0018	ME-3		1424	MA-0015	MA-0014	MA-3
1313	ME-0009	ME-0010	ME-2		1425	NI-0019	NI-0026	NI-10
1314	ME-0076	ME-0075	ME-10		1426	NI-0003	NI-0004	NI-2
1315	ME-0009	ME-0010	ME-2		1428	TO-0044	TO-0043	TO-10
1316	MI-0001	MI-0002	MI-1		1431	VO-0018	VO-0019	VO-4
1317	NI-0003	NI-0002	NI-1		1432	ME-0072	ME-0071	ME-9
1318	TO-0042	TO-0043	TO-10		1435	TO-0069	TO-0070	TO-14
1319	TO-0148	TO-0149	TO-28		1436	TO-0233	TO-0234	TO-44
1322	FO-0165	FO-0166	FO-27		1437	TO-0144	TO-0145	TO-28
1323	MA-0042	MA-0043	MA-7		1440	NI-0001	NI-0002	NI-1
1324	MA-0044	MA-0043	MA-7		1441	NI-0017	NI-0026	NI-10
1325	MA-0136	MA-0192	MA-28		1442	NI-0054	NI-0055	NI-21
1326	MA-0136	MA-0137	MA-20		1444	SUZ-0001	SUZ-0002	SUZ-1
1328	HO-0018	HO-0019	HO-4		1446	HO-0059	HO-0060	HO-10
1333	FO-0311	FO-0313	FO-48		1451	FO-0051	FO-0052	FO-8
1340	GM-0059	GM-0188	GM-36		1452	FO-0183	FO-0182	FO-29
1341	GM-0155	GM-0156	GM-30		1453	FO-0051	FO-0184	FO-30
1342	GM-0037-1	GM-0188	GM-36		1454	FO-0181	FO-0182	FO-29
1344	GM-0155	GM-0156	GM-30		1455	FO-0219	FO-0220	FO-35
1347	GM-0037-1	GM-0040	GM-9		1456	FO-0221	FO-0222	FO-35
1348	GM-0037-1	GM-0040	GM-9		1458	FO-0031	FO-0032	FO-5
1352	GM-0062	GM-0054	GM-14		1465	BM-0009	BM-0002	BM-2
1353	GM-0063	GM-0054	GM-15		1467	GM-0055	GM-0049	GM-13
1354	GM-0063	GM-0054	GM-15		1469	TO-0010	TO-0011	TO-2
1360	GM-0012	GM-0013	GM-3		1471	GM-0037	GM-0040	GM-8
1370	GM-0059	GM-0061	GM-14		1473	GM-0059	GM-0040	GM-13
1372	GM-0059	GM-0060	GM-14		1474	GM-0037	GM-0040	GM-8
1376	GM-0037	GM-0040	GM-8		1475	GM-0037-1	GM-0038	GM-8

RADIATOR DPI INTERCHANGE

DPI	INLET	OUTLET	PAGE
1476	GM-0037	GM-0038	GM-8
1477	GM-0055	GM-0049	GM-13
1485	GM-0065	GM-0066	GM-15
1486	GM-0067	GM-0068	GM-15
1488	FO-0156	FO-0155	FO-25
1493	GM-0037	GM-0040	GM-8
1494	HO-0001	HO-0002	HO-1
1505	CH-0130	CH-0131	CH-19
1507	CH-0111	CH-0112	CH-17
1509	MA-0042	MA-0043	MA-7
1510	MA-0136	MA-0137	MA-20
1511	FO-0151	FO-0152	FO-25
1512	TO-0585	TO-0586	TO-97
1515	GM-0096		GM-19
1516	GM-0029	GM-0030	GM-6
1517	GM-0027	GM-0028	GM-6
1520	GM-0012	GM-0013	GM-3
1521	GM-0017	GM-0018	GM-4
1522	GM-0012	GM-0013	GM-3
1523	GM-0017-1	GM-0020	GM-4
1524	GM-0017	GM-0019	GM-4
1528	GM-0059	GM-0060	GM-14
1531	GM-0102	GM-0101-1	GM-20
1532	GM-0035	GM-0036	GM-7
1533	GM-0035	GM-0036	GM-7
1536	GM-0037	GM-0040	GM-8
1543	GM-0017	GM-0018	GM-4
1545	GM-0017	GM-0018	GM-4
1546	GM-0037	GM-0040	GM-8
1548	CH-0041	CH-0042	CH-6
1550	FO-0157	FO-0158	FO-26
1551	FO-0159	FO-0158	FO-26
1552	CH-0093	CH-0094	CH-14
1553	CH-0154	CH-0155	CH-23
1554	CH-0154	CH-0156	CH-23
1557	VW-0010	VW-0011	VW-2
1559	MA-0146	MA-0147	MA-22
1560	MA-0015	MA-0014	MA-3
1561	NI-0045	NI-0046	NI-18
1568	HO-0123	HO-0234	HO-39
1570	HO-0023	HO-0022	HO-4
1571	IS-0011	IS-0012	IS-2
1572	HO-0069	HO-0070	HO-12
1573	NI-0041	NI-0042	NI-17
1574	SU-0012	SU-0013	SU-3
1575	TO-0176	TO-0177	TO-34
1577	VO-0012	VO-0013	VO-3
1578	VO-0012	VO-0013	VO-3
1581	HO-0003	HO-0002	HO-1
1592	CH-0005	CH-0006	CH-1
1594	NI-0041	NI-0042	NI-17
1599	GM-0325	GM-0326	GM-59
1609	FO-0033	FO-0034	FO-6
1610	GM-0155	GM-0156	GM-30
1611	HO-0069	HO-0070	HO-12
1622	VW-0001	VW-0002	VW-1
1626	FO-0045	FO-0046	FO-8
1682	CH-0111	CH-0112	CH-17
1684	GM-0059	GM-0040	GM-13
1687	GM-0159	GM-0160	GM-31
1688	GM-0031-1	GM-0032	GM-6
1690	GM-0063	GM-0064	GM-15
1692	GM-0063	GM-0064	GM-15
1693	GM-0012	GM-0013-1	GM-3
1694	GM-0012	GM-0013-1	GM-3
1696	GM-0017	GM-0019	GM-4
1700	GM-0141	GM-0142	GM-26
1702	CH-0097	CH-0098	CH-15
1704	MA-0063	MA-0064	MA-10
1707	CH-0055	CH-0056	CH-9
1709	CH-0144	CH-0145	CH-21
1717	CH-0055	CH-0056	CH-9
1718	FO-0077	FO-0081	FO-13
1719	FO-0077	FO-0081	FO-13
1720	GM-0017-1	GM-0020	GM-4
1722	FO-0198	FO-0200	FO-32
1726	FO-0173	FO-0174	FO-28
1728	FO-0198	FO-0199	FO-32
1729	FO-0149	FO-0150	FO-24
1732	SUZ-0059	SUZ-0060	SUZ-9
1735	FO-0190	FO-0191	FO-31
1736	MI-0012	MI-0011	MI-3
1737	FO-0027	FO-0028	FO-5
1738	VO-0009	VO-0011	VO-2
1739	VO-0009	VO-0011	VO-2
1741	HO-0123	HO-0124	HO-22
1742	FO-0119	FO-0334	FO-52
1746	TO-0049	TO-0050	TO-11
1748	TO-0178	TO-0177	TO-34
1750	TO-0103	TO-0102	TO-21
1751	NI-0153	NI-0154	NI-46
1752	NI-0102	NI-0100	NI-35
1753	BM-0009	BM-0002	BM-2
1755	TO-0345	TO-0346	TO-62
1758	TO-0101	TO-0102	TO-21
1770	GM-0059	GM-0060	GM-14
1774	TO-0345	TO-0346	TO-62
1775	FO-0154	FO-0155	FO-25
1776	HO-0136	HO-0137	HO-24
1777	GM-0321	GM-0322	GM-59

RADIATOR DPI INTERCHANGE

DPI	INLET	OUTLET	PAGE		DPI	INLET	OUTLET	PAGE
1778	TO-0345	TO-0346	TO-62		1909	TO-0039	TO-0040	TO-10
1779	GM-0321	GM-0322	GM-59		1910	TO-0054	TO-0055	TO-12
1786	GM-0031	GM-0032	GM-6		1912	HO-0013	HO-0014	HO-3
1789	GM-0063	GM-0064	GM-15		1917	TO-0012	TO-0014	TO-3
1791	GM-0063	GM-0064	GM-15		1918	TO-0023	TO-0024	TO-6
1792	GM-0012	GM-0013-1	GM-3		1921	MI-0010	MI-0011	MI-3
1793	GM-0017-1	GM-0020	GM-4		1939	TO-0099	TO-0100	TO-20
1795	GM-0017	GM-0018	GM-4		1940	HO-0009	HO-0010	HO-2
1803	GM-0031-1	GM-0032	GM-6		1943	HO-0239	HO-0100	HO-40
1808	GM-0017-1	GM-0020	GM-4		1947	TO-0097	TO-0098	TO-20
1809	GM-0017-1	GM-0020	GM-4		1949	MI-0128	MI-0129	MI-24
1815	HO-0001	HO-0002	HO-1		1951	HO-0015	HO-0014	HO-3
1816	HY-0001	HY-0002	HY-01		1952	HO-0018	HO-0019	HO-4
1818	CH-0041	CH-0042	CH-6		1953	HO-0018	HO-0019	HO-4
1819	SU-0025	SU-0026	SU-5		1956	MI-0015	MI-0014	MI-3
1823	HY-0031	HY-0032	HY-06		1958	TO-0176	TO-0177	TO-34
1824	FO-0001	FO-0002	FO-1		1978	NI-0005	NI-0008	NI-3
1825	GM-0033	GM-0034	GM-7		1979	HO-0069	HO-0070	HO-12
1826	GM-0033	GM-0034	GM-7		1981	TO-0178	TO-0177	TO-34
1830	FO-0043	FO-0044	FO-7		1983	NI-0054	NI-0053	NI-21
1838	MI-0044	MI-0045	MI-10		1985	TO-0345	TO-0346	TO-62
1841	BM-0009	BM-0002	BM-2		1986	TO-0345	TO-0346	TO-62
1842	GM-0157	GM-0158	GM-31		1992	AU-0029	AU-0030	AU-6
1843	BM-0009	BM-0002	BM-2		1993	AU-0029	AU-0030	AU-6
1844	ME-0001	ME-0002	ME-1		1994	FO-0119	FO-0120	FO-19
1845	ME-0123	ME-0002-1	ME-16		1998	TO-0001	TO-0002	TO-1
1847	ME-0013	ME-0014	ME-2		2003	GM-0031	GM-0032	GM-6
1850	CH-0014	CH-0015	CH-3		2004	TO-0054	TO-0055	TO-12
1851	VO-0005	VO-0006	VO-1		2005	TO-0041	TO-0040	TO-10
1852	CH-0012	CH-0013	CH-2		2008	MA-0046		MA-8
1853	SU-0019	SU-0020	SU-4		2010	MA-0138	MA-0137	MA-20
1854	TO-0219	TO-0220	TO-42		2014	GM-0059	GM-0040	GM-13
1859	TO-0273	TO-0272	TO-51		2023	MI-0094	MI-0095	MI-19
1860	TO-0273	TO-0272	TO-51		2024	MI-0130	MI-0131	MI-24
1862	CH-0012	CH-0013	CH-2		2030	HO-0016	HO-0017	HO-3
1864	SUZ-0048	SUZ-0049	SUZ-8		2031	HO-0064	HO-0014	HO-11
1874	TO-0278	TO-0050	TO-52		2034	AU-0001	AU-0004	AU-1
1878	GM-0035	GM-0036	GM-7		2037	BM-0013	BM-0012	BM-3
1881	GM-0323	GM-0324	GM-59		2039	GM-0203	GM-0205	GM-39
1885	GM-0143	GM-0144	GM-26		2043	GM-0012	GM-0014	GM-3
1887	GM-0007	GM-0008	GM-2		2049	NI-0035	NI-0036	NI-16
1888	GM-0007	GM-0008	GM-2		2051	HO-0053	HO-0054	HO-9
1889	GM-0007	GM-0008	GM-2		2053	NI-0198	NI-0199	NI-53
1890	GM-0007	GM-0008	GM-2		2054	NI-0027	NI-0031	NI-12
1892	MI-0130	MI-0284	MI-48		2055	NI-0027	NI-0032	NI-13
1893	GM-0007	GM-0008	GM-2		2056	KI-0005	KI-0006	KI-02
1894	GM-0007	GM-0008	GM-2		2057	KI-0013	KI-0014	KI-03
1897	HY-0018	HY-0019	HY-04		2058	TO-0053	TO-0052	TO-12
1905	CH-0083	CH-0084	CH-13		2062	TO-0608	TO-0609	TO-100
1907	MI-0039	MI-0040	MI-9		2063	MA-0013	MA-0014	MA-3

RADIATOR DPI INTERCHANGE

DPI	INLET	OUTLET	PAGE
2065	MA-0058	MA-0059	MA-9
2069	ME-0004	ME-0005	ME-2
2070	ME-0074	ME-0075	ME-10
2071	MI-0249	MI-0250	MI-43
2073	MI-0106	MI-0109	MI-21
2075	NI-0027	NI-0032	NI-13
2076	NI-0027	NI-0032	NI-13
2080	SA-0001	SA-0002	SA-1
2083	SU-0046	SU-0047	SU-8
2084	SUZ-0032	SUZ-0033	SUZ-6
2085	SUZ-0032	SUZ-0033	SUZ-6
2087	SUZ-0008	SUZ-0009	SUZ-2
2088	SUZ-0048	SUZ-0049	SUZ-8
2089	SUZ-0046	SUZ-0047	SUZ-7
2090	TO-0585	TO-0586	TO-97
2094	VW-0143	VW-0144	VW-22
2098	VW-0035	VW-0036	VW-7
2099	VO-0005	VO-0006	VO-1
2100	VO-0005	VO-0006	VO-1
2101	CH-0073	CH-0074	CH-11
2110	GM-0170	GM-0171	GM-33
2133	TO-0585	TO-0586	TO-97
2134	TO-0585	TO-0586	TO-97
2138	FO-0162	FO-0042	FO-26
2139	FO-0041	FO-0042	FO-7
2140	FO-0170	FO-0172	FO-28
2147	HO-0011	HO-0012	HO-2
2148	HO-0001	HO-0004	HO-1
2150	NI-0044	NI-0042	NI-18
2151	NI-0027	NI-0028	NI-11
2152	SU-0021	SU-0022	SU-4
2153	TO-0282	TO-0283	TO-53
2154	FO-0098	FO-0099	FO-16
2157	FO-0025	FO-0026	FO-5
2158	HO-0001	HO-0004	HO-1
2159	HO-0001	HO-0004	HO-1
2164	FO-0098	FO-0099	FO-16
2171	FO-0117	FO-0118	FO-19
2172	FO-0005	FO-0006	FO-1
2173	FO-0003	FO-0343	FO-54
2174	FO-0003	FO-0004	FO-1
2178	MA-0013	MA-0014	MA-3
2179	MA-0013	MA-0014	MA-3
2181	NI-0102	NI-0100	NI-35
2183	CH-0039	CH-0040	CH-6
2184	CH-0039	CH-0040	CH-6
2186	CH-0083	CH-0084	CH-13
2189	ME-0021	ME-0022	ME-3
2190	ME-0054	ME-0055	ME-7
2191	GM-0087	GM-0088	GM-18
2192	AU-0001	AU-0002	AU-1
2194	IS-0014	IS-0015	IS-3
2195	IS-0014	IS-0015	IS-3
2196	CH-0102	CH-0103	CH-16
2198	TO-0337	TO-0338	TO-60
2203	HO-0005	HO-0006	HO-2
2206	CH-0001	CH-0002	CH-1
2207	TO-0001	TO-0002	TO-1
2208	MI-0039	MI-0040	MI-9
2209	HO-0016	HO-0017	HO-3
2211	SU-0016	SU-0017	SU-3
2215	NI-0027	NI-0028	NI-11
2222	TO-0221	TO-0222	TO-42
2230	CH-0001	CH-0002	CH-1
2231	CH-0003	CH-0004	CH-1
2232	CH-0003	CH-0004	CH-1
2241	VW-0012	VW-0013	VW-2
2256	FO-0037	FO-0038	FO-6
2257	FO-0098	FO-0099	FO-16
2258	FO-0160	FO-0161	FO-26
2259	FO-0151	FO-0153	FO-25
2262	CH-0029	CH-0030	CH-5
2263	CH-0031	CH-0032	CH-5
2264	GM-0203	GM-0204	GM-39
2265	VW-0014	VW-0015	VW-3
2268	MA-0023	MA-0024	MA-4
2269	KI-0009	KI-0010	KI-02
2270	HO-0056	HO-0057	HO-10
2271	TO-0315	TO-0316	TO-57
2272	TO-0315	TO-0316	TO-57
2273	HO-0018	HO-0019	HO-4
2274	HO-0020	HO-0019	HO-4
2277	MA-0023	MA-0024	MA-4
2278	MI-0106	MI-0108	MI-21
2279	GM-0193	GM-0194	GM-37
2282	TO-0016	TO-0018	TO-4
2284	BM-0016	BM-0017	BM-3
2285	BM-0016	BM-0017	BM-3
2286	ME-0043	ME-0044	ME-5
2290	ME-0019	ME-0020	ME-3
2292	TO-0271	TO-0272	TO-51
2293	TO-0271	TO-0272	TO-51
2294	CH-0037	CH-0038	CH-6
2296	FO-0053	FO-0054	FO-9
2297	FO-0055	FO-0056	FO-9
2298	CH-0088	CH-0049	CH-14
2299	TO-0054	TO-0055	TO-12
2300	MI-0087	MI-0089	MI-17
2301	MI-0087	MI-0088	MI-17
2303	MA-0060	MA-0061	MA-10

RADIATOR DPI INTERCHANGE

DPI	INLET	OUTLET	PAGE		DPI	INLET	OUTLET	PAGE
2304	TO-0287	TO-0288	TO-53		2370	GM-0021	GM-0022	GM-5
2305	TO-0287	TO-0288	TO-53		2371	GM-0021	GM-0022	GM-5
2306	MA-0073	MA-0074	MA-11		2375	HO-0011	HO-0115	HO-21
2307	MA-0071	MA-0072	MA-11		2376	TO-0381	TO-0382	TO-67
2308	FO-0001	FO-0002	FO-1		2377	TO-0315	TO-0316	TO-57
2309	FO-0003	FO-0004	FO-1		2379	DA-0001	DA-0002	DA-1
2310	FO-0003	FO-0004	FO-1		2381	DA-0001	DA-0002	DA-1
2311	CH-0085	CH-0086	CH-13		2384	DA-0004	DA-0005	DA-1
2312	CH-0085	CH-0087	CH-13		2387	HY-0005	HY-0006	HY-02
2320	TO-0383	TO-0384	TO-67		2389	HY-0010	HY-0011	HY-03
2321	TO-0381	TO-0382	TO-67		2390	HY-0010	HY-0011	HY-03
2322	TO-0761	TO-0762	TO-127		2391	HY-0022	HY-0023	HY-05
2323	CH-0095	CH-0096	CH-15		2392	KI-0023	KI-0024	KI-04
2324	TO-0280	TO-0281	TO-52		2400	VO-0015	VO-0016	VO-3
2325	TO-0280	TO-0281	TO-52		2402	SU-0016	SU-0017	SU-3
2327	NI-0103	NI-0104	NI-35		2403	TO-0116	TO-0117	TO-23
2328	NI-0090	NI-0094	NI-31		2404	TO-0116	TO-0117	TO-23
2329	NI-0099	NI-0101	NI-34		2405	MI-0087	MI-0088	MI-17
2330	MA-0053	MA-0054	MA-9		2406	MI-0087	MI-0089	MI-17
2331	SU-0009	SU-0010	SU-2		2408	MA-0138	MA-0137	MA-20
2333	NI-0041	NI-0043	NI-17		2410	MI-0087	MI-0088	MI-17
2334	GM-0023	GM-0024	GM-5		2412	HO-0027	HO-0028	HO-5
2335	TO-0518	TO-0519	TO-88		2413	NI-0112	NI-0091	NI-39
2336	CH-0033	CH-0034	CH-5		2414	NI-0056	NI-0057	NI-22
2337	ME-0077	ME-0078	ME-11		2417	HO-0056	HO-0057-1	HO-10
2338	HY-0059	HY-0060	HY-10		2418	TO-0242	TO-0243	TO-45
2339	HY-0015	HY-0011	HY-04		2419	TO-0242	TO-0243	TO-45
2340	CH-0005	CH-0006	CH-1		2421	GM-0007	GM-0165	GM-32
2342	FO-0016	FO-0017	FO-3		2423	GM-0021	GM-0022	GM-5
2344	HO-0091	HO-0092	HO-16		2424	VO-0007	VO-0008	VO-1
2345	ME-0056	ME-0055	ME-7		2425	HO-0027	HO-0028	HO-5
2346	NI-0103	NI-0104	NI-35		2426	NI-0039	NI-0040	NI-16
2347	GM-0015	GM-0016	GM-3		2427	TO-0282	TO-0283	TO-53
2348	GM-0015	GM-0016	GM-3		2428	TO-0110	TO-0111	TO-22
2351	GM-0007	GM-0008	GM-2		2430	SUZ-0011	SUZ-0012	SUZ-2
2353	GM-0065	GM-0066	GM-15		2431	HO-0011	HO-0116	HO-21
2354	HO-0031	HO-0032	HO-6		2433	MI-0087	MI-0089	MI-17
2355	HO-0031	HO-0032	HO-6		2434	TO-0126	TO-0127	TO-25
2356	TO-0085	TO-0086	TO-18		2435	TO-0126	TO-0127	TO-25
2357	IS-0009	IS-0010	IS-2		2436	TO-0125	TO-0124	TO-25
2358	TO-0520	TO-0521	TO-88		2437	TO-0123	TO-0124	TO-25
2359	IS-0009	IS-0010	IS-2		2438	MI-0087	MI-0089	MI-17
2360	VW-0014	VW-0015	VW-3		2441	KI-0009	KI-0010	KI-02
2362	CH-0043	CH-0045	CH-7		2442	KI-0039	KI-0040	KI-06
2363	CH-0043	CH-0044	CH-7		2443	HO-0043	HO-0044-1	HO-7
2365	GM-0065	GM-0066	GM-15		2444	HO-0043	HO-0044-1	HO-7
2366	GM-0023	GM-0024	GM-5		2445	IS-0014	IS-0016	IS-3
2367	GM-0023	GM-0024	GM-5		2448	MI-0023	MI-0024	MI-5
2368	GM-0023	GM-0024	GM-5		2451	SU-0001	SU-0002	SU-1
2369	GM-0193	GM-0196	GM-37		2452	TO-0312	TO-0313	TO-57

RADIATOR DPI INTERCHANGE

DPI	INLET	OUTLET	PAGE
2453	TO-0305	TO-0306	TO-56
2454	TO-0310	TO-0306	TO-56
2455	NI-0070	NI-0071	NI-25
2456	MA-0055	MA-0054	MA-9
2458	GM-0069	GM-0070	GM-16
2459	NI-0027	NI-0031	NI-12
2460	GM-0170	GM-0171	GM-33
2462	GM-0091	GM-0092	GM-18
2463	GM-0091	GM-0092	GM-18
2464	SU-0005	SU-0002	SU-1
2465	SU-0029	SU-0030	SU-5
2467	MI-0065	MI-0066	MI-13
2468	MI-0065	MI-0066	MI-13
2469	NI-0108	NI-0107	NI-37
2470	FO-0003-1	FO-0004	FO-1
2471	GM-0065	GM-0066	GM-15
2472	GM-0065	GM-0066	GM-15
2474	GM-0193	GM-0194	GM-37
2475	GM-0065	GM-0066	GM-15
2479	CH-0018	CH-0019	CH-3
2480	CH-0016	CH-0017	CH-3
2481	CH-0061	CH-0062	CH-10
2482	CH-0059	CH-0060	CH-9
2492	GM-0015	GM-0320	GM-58
2506	SUZ-0008	SUZ-0009	SUZ-2
2510	GM-0189	GM-0190	GM-36
2513	GM-0095	GM-0094-1	GM-37
2514	GM-0095	GM-0094-1	GM-37
2516	GM-0010	GM-0011	GM-2
2518	GM-0159	GM-0161	GM-31
2520	GM-0203	GM-0206	GM-39
2538	GM-0166	GM-0167	GM-32
2541	TO-0245	TO-0222	TO-46
2550	GM-0203	GM-0204	GM-39
2556	AU-0009	AU-0010	AU-2
2557	AU-0009	AU-0011	AU-2
2561	KI-0045	KI-0046	KI-07
2562	GM-0094	GM-0095	GM-19
2563	GM-0071	GM-0072	GM-16
2565	GM-0107	GM-0108	GM-21
2567	JA-0001	JA-0002	JA-1
2569	HO-0024	HO-0025	HO-5
2571	HO-0079	HO-0078	HO-14
2572	HO-0037	HO-0038	HO-6
2573	HO-0045	HO-0046	HO-8
2574	HO-0039	HO-0040	HO-7
2575	TO-0245	TO-0222	TO-46
2576	NI-0085	NI-0066	NI-29
2577	NI-0085	NI-0066	NI-29
2578	NI-0056	NI-0060	NI-23
2580	TO-0318	TO-0319	TO-58
2581	TO-0320	TO-0321	TO-58
2583	CH-0057	CH-0058	CH-9
2585	KI-0034	KI-0035	KI-06
2586	HY-0008	HY-0009	HY-03
2588	NI-0065	NI-0066	NI-25
2590	AU-0012	AU-0013	AU-3
2593	BM-0030	BM-0031	BM-6
2594	BM-0030	BM-0031	BM-6
2595	GM-0323	GM-0324	GM-59
2599	HO-0024	HO-0025	HO-5
2603	FO-0196	FO-0197	FO-31
2607	GM-0215	GM-0216	GM-41
2608	GM-0081	GM-0082	GM-17
2609	FO-0192	FO-0193	FO-31
2610	FO-0039	FO-0040	FO-7
2612	NI-0099	NI-0101	NI-34
2617	MI-0023	MI-0024	MI-5
2621	IS-0014	IS-0015	IS-3
2623	TO-0349	TO-0350	TO-62
2625	BM-0030	BM-0031	BM-6
2626	BM-0009	BM-0002	BM-2
2635	BM-0028	BM-0020	BM-6
2636	BM-0019	BM-0020	BM-4
2648	AU-0005	AU-0006	AU-1
2652	ME-0048	ME-0050	ME-6
2671	NI-0069	NI-0068	NI-25
2672	MA-0029	MA-0030	MA-5
2673	MA-0027	MA-0026	MA-5
2674	SU-0016	SU-0017	SU-3
2675	MI-0079	MI-0080	MI-15
2676	MI-0028	MI-0029	MI-6
2677	CH-0048	CH-0049	CH-8
2679	CH-0048	CH-0049	CH-8
2680	HO-0082	HO-0083	HO-14
2681	TO-0596	TO-0597	TO-99
2683	NI-0067	NI-0068	NI-25
2690	TO-0448	TO-0449	TO-76
2691	NI-0075	NI-0076	NI-27
2692	NI-0056	NI-0060	NI-23
2694	MA-0101	MA-0102	MA-15
2695	MA-0101	MA-0102	MA-15
2696	MA-0067	MA-0068	MA-11
2700	HY-0001	HY-0003	HY-01
2701	KI-0027	KI-0028	KI-05
2702	CH-0024	CH-0025	CH-4
2703	SU-0004	SU-0002	SU-1
2704	SU-0004	SU-0002	SU-1
2707	GM-0181	GM-0182	GM-35
2710	GM-0168	GM-0169	GM-33

RADIATOR DPI INTERCHANGE

DPI	INLET	OUTLET	PAGE		DPI	INLET	OUTLET	PAGE
2711	CH-0057	CH-0058	CH-9		2806	HO-0075	HO-0076	HO-13
2712	GM-0037	GM-0147-1	GM-28		2807	NI-0158	NI-0159	NI-48
2713	GM-0012	GM-0197	GM-38		2808	NI-0160	NI-0159	NI-48
2714	GM-0146	GM-0112	GM-27		2810	OP-0119	OP-0120	OP-18
2715	GM-0111	GM-0112	GM-21		2812	SU-0018	SU-0017	SU-4
2719	FO-0098-2	FO-0187	FO-30		2816	FO-0096	FO-0097	FO-15
2723	MI-0267	MI-0268	MI-46		2817	TO-0130	TO-0131	TO-26
2727	GM-0085	GM-0086	GM-18		2820	KI-0089	KI-0090	KI-13
2731	GM-0105	GM-0106	GM-21		2821	KI-0089	KI-0090	KI-13
2738	CH-0118	CH-0119	CH-18		2822	VW-0039	VW-0040	VW-7
2739	CH-0118	CH-0119	CH-18		2827	GM-0115	GM-0116	GM-22
2740	HO-0058	HO-0057-1	HO-10		2831	HY-0079	HY-0080	HY-13
2741	FO-0117-1	FO-0118-1	FO-19		2832	HY-0079	HY-0080	HY-13
2745	HO-0138	HO-0139	HO-25		2837	GM-0207	GM-0208	GM-39
2752	MI-0065	MI-0066	MI-13		2838	HO-0080	HO-0081	HO-14
2756	AU-0036	AU-0037	AU-7		2839	CH-0035	CH-0036	CH-6
2757	GM-0189	GM-0190	GM-36		2840	CH-0035	CH-0036	CH-6
2758	TO-0524	TO-0525	TO-89		2842	MI-0111	MI-0112	MI-22
2761	FO-0067	FO-0068	FO-11		2843	MI-0111	MI-0112	MI-22
2762	FO-0107	FO-0108	FO-17		2844	MA-0055	MA-0054	MA-9
2763	FO-0105	FO-0106	FO-17		2846	SU-0048	SU-0049	SU-8
2764	GM-0089	GM-0090	GM-18		2850	GM-0109	GM-0110	GM-21
2765	GM-0083	GM-0084	GM-17		2852	FO-0109	FO-0110	FO-18
2766	CH-0027	CH-0028	CH-5		2855	GM-0223	GM-0224	GM-43
2767	CH-0027	CH-0028	CH-5		2856	FO-0113	FO-01114	FO-18
2768	MA-0055	MA-0054	MA-9		2857	GM-0186	GM-0187	GM-35
2770	CH-0052	CH-0054	CH-8		2864	GM-0083	GM-0084	GM-17
2771	BM-0024	BM-0020	BM-5		2868	ME-0081	ME-0082	ME-11
2773	HO-0079	HO-0078	HO-14		2870	RO-0011	RO-0012	RO-2
2774	DA-0007	DA-0008	DA-2		2873	DA-0007	DA-0008	DA-2
2776	TO-0238	TO-0239	TO-45		2875	ME-0091	ME-0092	ME-13
2777	SU-0033	SU-0034	SU-6		2878	VO-0003	VO-0004	VO-1
2778	SU-0035	SU-0034	SU-6		2879	GM-0237	GM-0238	GM-45
2779	SU-0031	SU-0032	SU-5		2881	GM-0199	GM-0200	GM-38
2780	NI-0210	NI-0211	NI-56		2882	BM-0037	BM-0036	BM-7
2781	TO-0478	TO-0479	TO-81		2883	MI-0068	MI-0069	MI-13
2782	TO-0104	TO-0105	TO-21		2889	TO-0295	TO-0296	TO-54
2784	KI-0055	KI-0056	KI-08		2890	TO-0295	TO-0296	TO-54
2785	HY-0043	HY-0044	HY-08		2891	TO-0276	TO-0277	TO-52
2786	HY-0043	HY-0044	HY-08		2892	TO-0276	TO-0277	TO-52
2788	GM-0003	GM-0004	GM-1		2893	TO-0274	TO-0275	TO-51
2789	FO-0111	FO-0112	FO-18		2894	MA-0095	MA-0096	MA-15
2794	CH-0043	CH-0045	CH-7		2896	HY-0075	HY-0076	HY-13
2795	CH-0052	CH-0053	CH-8		2898	KI-0132	KI-0133	KI-20
2796	ME-0053	ME-0052	ME-7		2906	ME-0125	ME-0126	ME-16
2797	HO-0024	HO-0025	HO-5		2909	ME-0089	ME-0090	ME-12
2799	GM-0091	GM-0092	GM-18		2916	HO-0117	HO-0118	HO-21
2802	TO-0323	TO-0324	TO-59		2917	TO-0128	TO-0129	TO-25
2804	VO-0001	VO-0002	VO-1		2918	MA-0031	MA-0032	MA-6
2805	VO-0001	VO-0002	VO-1		2919	TO-0130	TO-0131	TO-26

RADIATOR DPI INTERCHANGE

DPI	INLET	OUTLET	PAGE
2922	HO-0061	HO-0062	HO-11
2923	HO-0061	HO-0062	HO-11
2925	TO-0365	TO-0366	TO-65
2928	HY-0081	HY-0082	HY-13
2929	TO-0364	TO-0363	TO-65
2930	RO-0020	RO-0021	RO-3
2933	SUZ-0013	SUZ-0014	SUZ-2
2935	GM-0235	GM-0236	GM-45
2937	FO-0115	FO-0116	FO-18
2938	HO-0128	HO-0129	HO-23
2939	HO-0080	HO-0125	HO-22
2941	BM-0038	BM-0040	BM-8
2948	GM-0186	GM-0187	GM-35
2951	CH-0071	CH-0072	CH-11
2952	FO-0096	FO-0097	FO-15
2954	HO-0103	HO-0104	HO-19
2955	HO-0065	HO-0066-1	HO-12
2957	CH-0075	CH-0076	CH-12
2959	HY-0095	HY-0096	HY-15
2960	KI-0070	KI-0071	KI-11
2961	KI-0070	KI-0071	KI-11
2962	KI-0078	KI-0079	KI-12
2966	HO-0082	HO-0083	HO-14
2969	GM-0201	GM-0202	GM-38
2971	CH-0069	CH-0070	CH-11
2973	BM-0038	BM-0039	BM-7
2975	CH-0063	CH-0064	CH-10
2976	FO-0185	FO-0186	FO-30
2979	MI-0099	MI-0100	MI-20
2980	SUZ-0024	SUZ-0026	SUZ-4
2981	NI-0397	NI-0089	NI-85
2985	MA-0105	MA-0106	MA-16
2986	MA-0105	MA-0106	MA-16
2988	NI-0175	NI-0176	NI-50
2989	HO-0133	HO-0135	HO-24
2990	HO-0101	HO-0102	HO-18
2992	GM-0037	GM-0148	GM-28
2993	TO-0587	TO-0588	TO-97
2994	TO-0528	TO-0529	TO-89
2997	HY-0137	HY-0138	HY-22
2998	NI-0171	NI-0172	NI-50
2999	NI-0276	NI-0066	NI-66
10082	TO-0776	TO-0777	TO-129
13000	DA-0015	DA-0016	DA-3
13001	TO-0566	TO-0567	TO-95
13007	GM-0117	GM-0118	GM-22
13012	NI-0212	NI-0211	NI-56
13015	HO-0043	HO-0127	HO-23
13018	TO-0481	TO-0479	TO-81
13019	TO-0591	TO-0592	TO-98
13020	NI-0171	NI-0172	NI-50
13022	FO-0143	FO-0144	FO-24
13024	TO-0385	TO-0387	TO-68
13026	SU-0056	SU-0017	SU-9
13027	ME-0091	ME-0092	ME-13
13028	SUZ-0052	SUZ-0053	SUZ-8
13031	HO-0103	HO-0105	HO-19
13035	TO-0132	TO-0131	TO-26
13036	AU-0036	AU-0037	AU-7
13037	TO-0343	TO-0344	TO-62
13038	NI-0276	NI-0066	NI-66
13039	NI-0219	NI-0220	NI-57
13040	FO-0203	FO-0204	FO-32
13041	FO-0205	FO-0206	FO-33
13043	GM-0231	GM-0232	GM-44
13045	FO-0129	FO-0130	FO-21
13047	NI-0238	NI-0239	NI-60
13048	VW-0012	VW-0013	VW-2
13049	TO-0351	TO-0352	TO-63
13057	GM-0119	GM-0120	GM-23
13059	HY-0126	HY-0127	HY-20
13063	CH-0077	CH-0078	CH-12
13065	HO-0128	HO-0130	HO-23
13068	HO-0086	HO-0087	HO-15
13071	CH-0067	CH-0068	CH-11
13076	TO-0591	TO-0593	TO-98
13078	NI-0177	NI-0178	NI-51
13079	NI-0177	NI-0178	NI-51
13080	TO-0371	TO-0372	TO-66
13081	HO-0080	HO-0126	HO-23
13082	HO-0131	HO-0132	HO-24
13084	CH-0079	CH-0080	CH-12
13085	HY-0126	HY-0128	HY-20
13087	FO-0268	FO-0269	FO-43
13089	MA-0130	MA-0131	MA-19
13090	TO-0749	TO-0750	TO-125
13091	SU-0035	SU-0034	SU-6
13092	SU-0033	SU-0034	SU-6
13093	SU-0036	SU-0034	SU-6
13095	SU-0037	SU-0038	SU-6
13096	TO-0561	TO-0562	TO-94
13097	DA-0027	DA-0029	DA-5
13099	FO-0131	FO-0130-1	FO-21
13100	MA-0127	MA-0129	MA-19
13103	GM-0239	GM-0240	GM-45
13106	TO-0355	TO-0356	TO-64
13108	GM-0135	GM-0136	GM-25
13116	TO-0375	TO-0376	TO-66
13119	TO-0412	TO-0413	TO-71
13120	HY-0131	HY-0132	HY-21

RADIATOR DPI INTERCHANGE

DPI	INLET	OUTLET	PAGE		DPI	INLET	OUTLET	PAGE
13121	HO-0133	HO-0134	HO-24		13251	TO-0369	TO-0370	TO-66
13122	TO-0385	TO-0386	TO-68		13252	HY-0101	HY-0102	HY-16
13123	TO-0385	TO-0386	TO-68		13253	HY-0101	HY-0102	HY-16
13124	TO-0416	TO-0417	TO-72		13254	ME-0099	ME-0100	ME-14
13129	CH-0120	CH-0121	CH-18		13257	HO-0108	HO-0109	HO-20
13132	KI-0066	KI-0067	KI-10		13260	NI-0190	NI-0191	NI-52
13133	KI-0066	KI-0067	KI-10		13261	NI-0190	NI-0191	NI-52
13134	KI-0104	KI-0105	KI-16		13269	TO-0133	TO-0134	TO-26
13135	KI-0101	KI-0102	KI-16		13270	TO-0133	TO-0134	TO-26
13141	GM-0221-1	GM-0222	GM-42		13272	VW-0072	VW-0073	VW-12
13142	GM-0221	GM-0222	GM-42		13273	VW-0125	VW-0126	VW-20
13145	FO-0225	FO-0257	FO-40		13277	BM-0060	BM-0061	BM-11
13146	GM-0275	GM-0273	GM-51		13278	AU-0033	AU-0034	AU-6
13148	JA-0003	JA-0004	JA-1		13284	NI-0308	NI-0309	NI-71
13150	HY-0117	HY-0118	HY-18		13295	CH-0120	CH-0121	CH-18
13153	TO-0355	TO-0356	TO-64		13296	CH-0134	CH-0135	CH-20
13155	HO-0103	HO-0105	HO-19		13301	GM-0253	GM-0254	GM-47
13157	CH-0150	CH-0151	CH-22		13306	FO-0139-1	FO-0140-1	FO-23
13158	CH-0128	CH-0129	CH-19		13308	FO-0139	FO-0140	FO-23
13161	HO-0103	HO-0104	HO-19		13313	FO-0235	FO-0236	FO-37
13162	ME-0087	ME-0088	ME-12		13314	HO-0107	HO-0104	HO-19
13178	CH-0026	CH-0025	CH-4		13317	MA-0107	MA-0108	MA-16
13179	HO-0133	HO-0134	HO-24		13319	TO-0671	TO-0672	TO-110
13181	CH-0035	CH-0149	CH-22		13321	FO-0237	FO-0238	FO-38
13184	FO-0233	FO-0234	FO-37		13323	CH-0124	CH-0125	CH-19
13185	FO-0250	FO-0251	FO-39		13326	GM-0332	GM-0333	GM-60
13188	AU-0031	AU-0032	AU-6		13327	FO-0341	FO-0342	FO-54
13189	HY-0145	HY-0146	HY-23		13328	GM-0227	GM-0228	GM-43
13191	HY-0119	HY-0120	HY-19		13331	FO-0239	FO-0240	FO-38
13194	HY-0121	HY-0122	HY-19		13332	GM-0227	GM-0228	GM-43
13197	GM-0213	GM-0214	GM-40		13333	HY-0113	HY-0115	HY-18
13200	CH-0081	CH-0082	CH-12		13362	FO-0339	FO-0340	FO-53
13201	FO-0132	FO-0134	FO-22		13340	TO-0628	TO-0627	TO-103
13202	HY-0113	HY-0114	HY-18		13341	GM-0302	GM-0303	GM-56
13209	FO-0107	FO-0252	FO-40		13344	GM-0302	GM-0304	GM-56
13217	GM-0129	GM-0130	GM-24		13348	NI-0388	NI-0389	NI-84
13219	FO-0121	FO-0122	FO-19		13349	GM-0288	GM-0252	GM-53
13220	MA-0172	MA-0173	MA-25		13353	BM-0047	BM-0046	BM-9
13221	HO-0108	HO-0110	HO-20		13356	FO-0253	FO-0254	FO-40
13227	FO-0306	FO-0130-1	FO-47		13358	ME-0109	ME-0110	ME-15
13230	FO-0243	FO-0244	FO-38		13361	GM-0259	GM-0260	GM-48
13231	FO-0225	FO-0226	FO-35		13363	HO-0157	HO-0158	HO-28
13233	MA-0097	MA-0139	MA-20		13364	FO-0276	FO-0277	FO-43
13240	FO-0347	FO-0348	FO-55		13365	NI-0194	NI-0195	NI-53
13241	GM-0249	GM-0250	GM-47		13366	GM-0229	GM-0230	GM-44
13244	GM-0312	GM-0313	GM-57		13367	MA-0111	MA-0112	MA-17
13246	GM-0274	GM-0270	GM-51		13370	BM-0066	BM-0067	BM-12
13247	GM-0137	GM-0138	GM-25		13373	HY-0147	HY-0122	HY-23
13248	GM-0225	GM-0226	GM-43		13389	MA-0152	MA-0153	MA-22
13249	HY-0150	HY-0151	HY-24		13391	HY-0119	HY-0120	HY-19

RADIATOR DPI INTERCHANGE

DPI	INLET	OUTLET	PAGE		DPI	INLET	OUTLET	PAGE
13394	BM-0041	BM-00443	BM-8					
13397	GM-0139	GM-0140	GM-26					
13398	GM-0139	GM-0140	GM-26					
13400	CH-0136	CH-0137	CH-20					
13404	MA-0158	MA-0159	MA-23					
13412	HY-0116	HY-0115	HY-18					
13418	HO-0209	HO-0210	HO-35					
13419	GM-0334	GM-0335	GM-61					
13420	HY-0191	HY-0192	HY-30					
13424	SU-0052	SU-0053	SU-8					
13430	FO-0280	FO-0281	FO-43					
13431	NI-0320	NI-0321	NI-73					
13432	ME-0144	ME-0145	ME-19					
13443	MI-0300	MI-0301	MI-51					
13448	CH-0140	CH-0141	CH-21					
13449	TO-0649	TO-0651	TO-106					
13450	TO-0649	TO-0650	TO-106					
13451	HO-0222	HO-0223	HO-37					
13454	FO-0274	FO-0275	FO-43					
13455	HY-0177	HY-0178	HY-28					
13457	HY-0179	HY-0180	HY-28					
13460	SU-0057	SU-0058	SU-10					
13461	SU-0059	SU-0058	SU-10					
13462	GM-0261	GM-0262	GM-48					
13469	MI-0212	MI-0213	MI-37					
13470	ME-0194	MI-0195	MI-34					
13471	GM-0274	GM-0337	GM-61					
13500	GM-0265	GM-0266	GM-49					
13501	GM-0263	GM-0264	GM-49					
13508	KI-0149	KI-0150	KI-23					
13510	FO-0272	FO-0273	FO-43					
13516	HO-0211	HO-0212	HO-36					
13518	KI-0145	KI-0163	KI-25					
13532	NI-0410	NI-0411	NI-87					
13544	BM-0076	BM-0077	BM-13					
13576	HY-0184	HY-0185	HY-29					

ALFA ROMEO

AF-0001



AF-0002

Tank size :(R11.5×4×6×42.5×415)
OEM :
DPI :
NISSENS :60052
APPLICATION :
00- ALFA ROMEO 147 1.6/2.0L

AF-0003



AF-0002

Tank size :(R11.5×4×6×42.5×415)
OEM :
DPI :
NISSENS :
APPLICATION :
00- ALFA ROMEO 147 1.6/2.0L

Tank size :
OEM :
DPI :
NISSENS :
APPLICATION :

Tank size :
OEM :
DPI :
NISSENS :
APPLICATION :

HONGYAN AUTO PARTS

AF:1

ALFA ROMEO

	Tank size : OEM : DPI : NISSENS : APPLICATION :
	Tank size : OEM : DPI : NISSENS : APPLICATION :
	Tank size : OEM : DPI : NISSENS : APPLICATION :
	Tank size : OEM : DPI : NISSENS : APPLICATION :

HONGYAN AUTO PARTS

AUDI

AU-0001

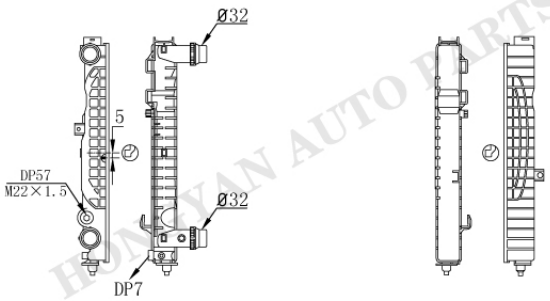

AU-0002

Tank size :(R8×5×6×48.5×412)
OEM :8D012125AP/BC
DPI :2192
NISSENS :60849
APPLICATION :
94- AUDI A4/S4 1.6/1.8/2.0L
97- AUDI A6/S6 1.8/2.0L

AU-0003

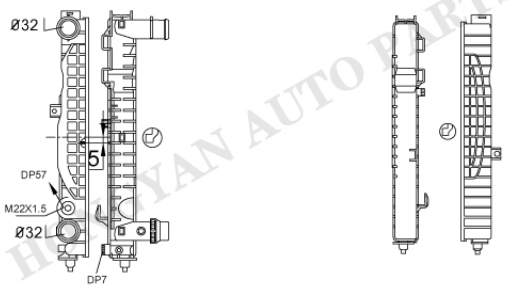

AU-0002

Tank size :(R8×5×6×48.5×412)
OEM :
DPI :
NISSENS :
APPLICATION :
94- AUDI A4/S4 1.6/1.8/2.0L
97- AUDI A6/S6 1.8/2.0L

AU-0001

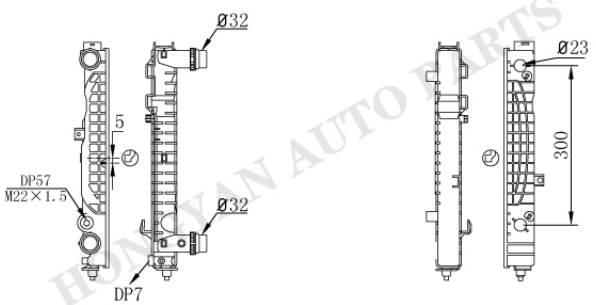

AU-0004AT/MT

Tank size :(R8×5×6×48.5×412)
OEM :BD0121251BC
DPI :2034
NISSENS :60229 60229A
APPLICATION :
96-01 AUDI A4 1.8L
98-05 VOLKSWAGEN PASSAT 1.8/2.0L

AU-0005

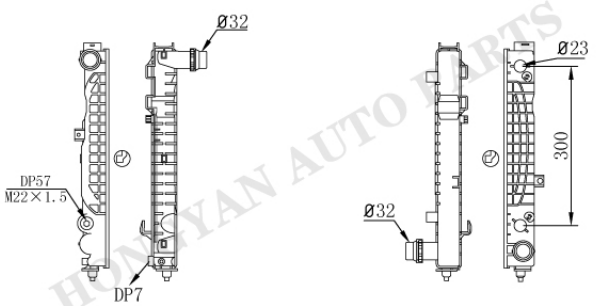

AU-0006AT/MT

Tank size :(R8×5×6×48.5×412)
OEM :8D0121251B
DPI :2648
NISSENS :
APPLICATION :
96-01 AUDI A4 1.8/2.8L
98-04 AUDI A6 2.7/2.8L
01-02 AUDI S4 2.7L
98-04 VOLKSWAGEN PASSAT 2.8L

HUAYAN AUTO PARTS

AU-0007

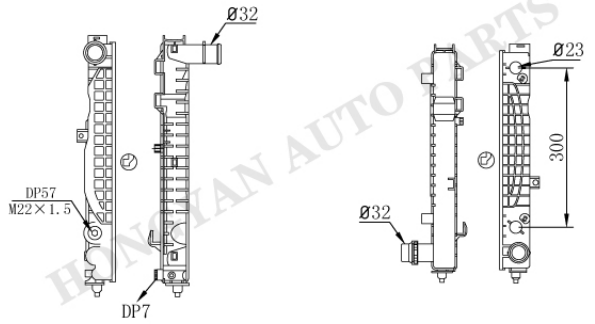

AU-0006AT/MT

Tank size :(R8×5×6×48.5×412)
OEM :8D0121251B
DPI :
NISSENS :
APPLICATION :
96-01 AUDI A4 1.8/2.8L
98-04 AUDI A6 2.7/2.8L
01-02 AUDI S4 2.7L
98-04 VOLKSWAGEN PASSAT 2.8L

AU-0005

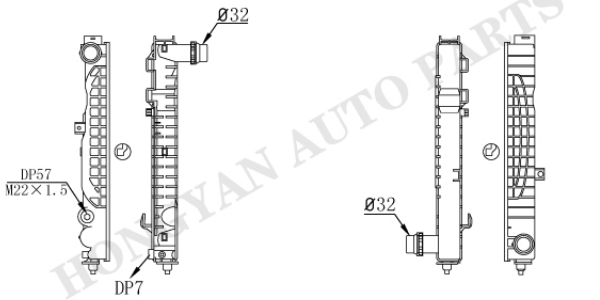

AU-0008

Tank size :(R8×5×6×48.5×412)
OEM :8D0121251N
DPI :
NISSENS :
APPLICATION :
96-01 AUDI A4 1.8/2.8L
98-04 AUDI A6 2.7/2.8L
01-02 AUDI S4 2.7L
98-04 VOLKSWAGEN PASSAT 2.8L

AU-0009

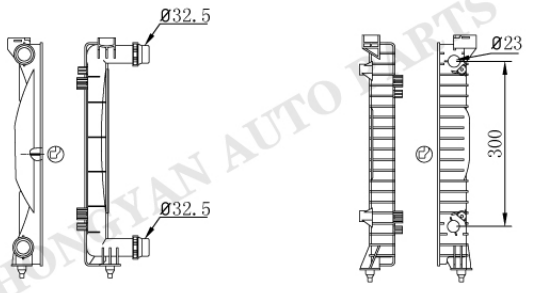

AU-0010AT/MT

Tank size :(R8.5×5×4×43/47.5×420)
OEM :8E0121251L
DPI :2556
NISSENS :
APPLICATION :
02-08 AUDI A4 1.8/2.0L

AU-0009

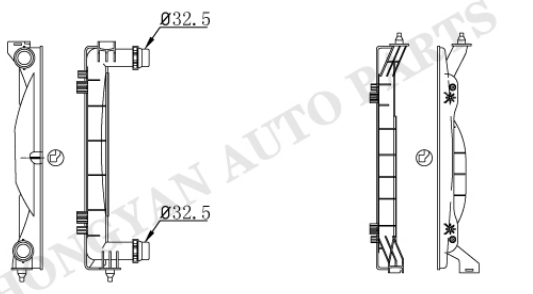

AU-0011

Tank size :(R8.5×5×4×43×420)
OEM :8E012125A 8E0121251A
DPI :2557
NISSENS :
APPLICATION :
03-06 AUDI A4 1.8L
04-08 AUDI S4 4.2L

HONGYAN AUTO PARTS

AUDI

AU-0012

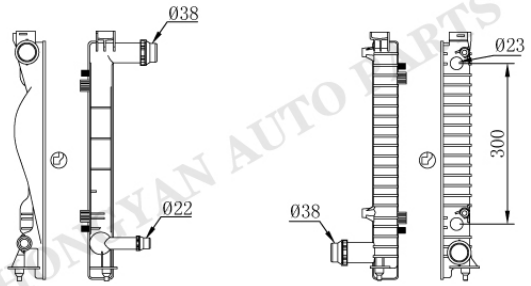

AU-0013AT/MT

Tank size :(R8×4×5×48.5×448)
OEM :8E0121251M/S/AR
DPI :2590
NISSENS :60307A
APPLICATION :
02-08 AUDI A4 3.0/3.2L
02-05 AUDI A6 3.0/3.2L

AU-0012

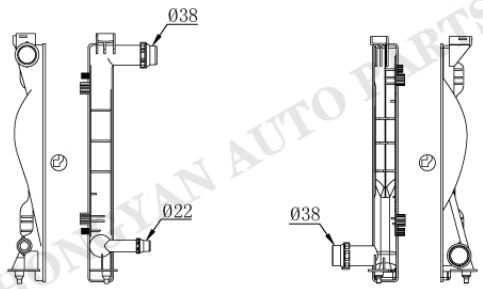

AU-0014

Tank size :(R8×4×5×48.5×448)
OEM :4F0121251L/T
DPI :
NISSENS :60234A
APPLICATION :
04- AUDI A6 2.4/2.8/3.0/3.2L

AU-0015

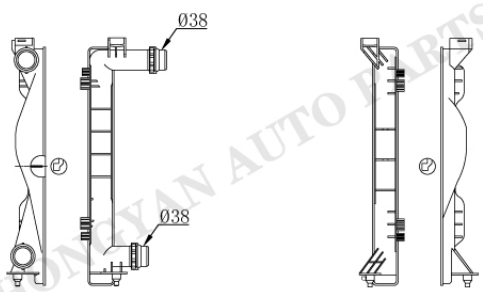

AU-0016

Tank size :(R8×5×4×48.5×448)
OEM :4F0121251Q
DPI :
NISSENS :60235A
APPLICATION :
04- AUDI A6/S4 2.0L

AU-0017

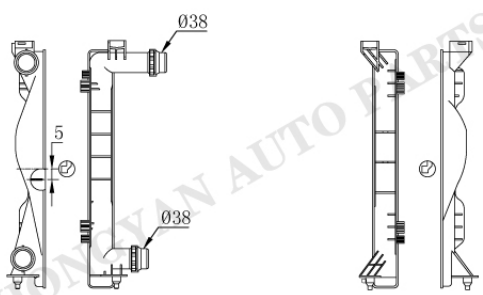

AU-0016

Tank size :(R8×5×4×48.5×448)
OEM :4F0121251Q
DPI :
NISSENS :60235A
APPLICATION :
04- AUDI A6/S4 2.0L

HONGYAN AUTO PARTS

AU-0015

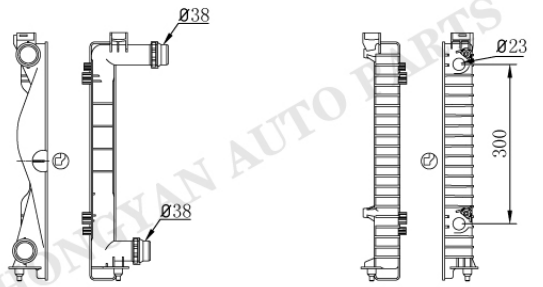

AU-0018AT/MT

Tank size :(R8×5×4×48.5×448)
OEM :4F0121251R
DPI :
NISSENS :60237A
APPLICATION :
04- AUDI A6/S6 2.0L

AU-0017

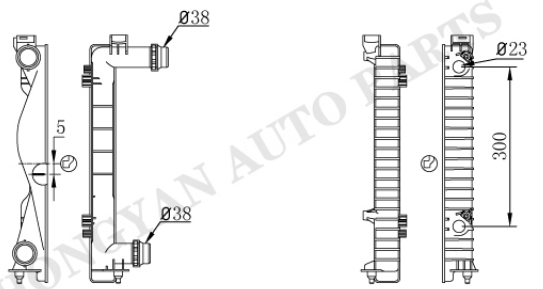

AU-0018AT/MT

Tank size :(R8×5×4×48.5×448)
OEM :4F0121251R
DPI :
NISSENS :60237A
APPLICATION :
04- AUDI A6/S6 2.0L

AU-0019

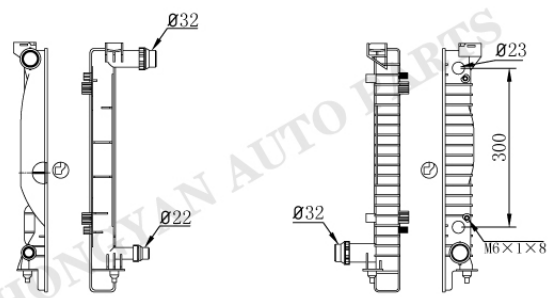

AU-0020AT

Tank size :(R8×5×5×48×458)
OEM :8E0121251M/S/AR
DPI :
NISSENS :
APPLICATION :
02-08 AUDI A4 3.0/3.2L
02-05 AUDI A6 3.0/3.2L

AU-0019

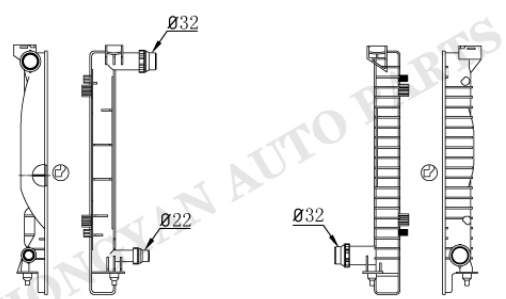

AU-0020MT

Tank size :(R8×5×5×48×458)
OEM :
DPI :
NISSENS :
APPLICATION :
02-08 AUDI A4 3.0/3.2L
02-05 AUDI A6 3.0/3.2L

HONGYAN AUTO PARTS

AUDI

AU-0021

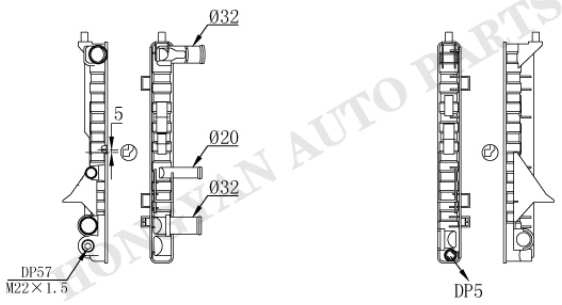

AU-0022

Tank size :(R11.5×4×5×42.5×415)
OEM :4A0121251/E
DPI :
NISSENS :60460
APPLICATION :
90- AUDI 100 1.6L

AU-0023

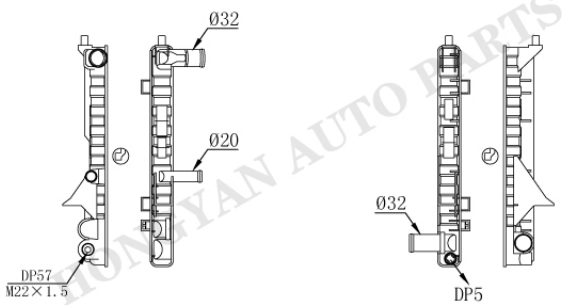

AU-0024

Tank size :(R11.5×4×5×42.5×415)
OEM :4A0121251G/J
DPI :
NISSENS :60458
APPLICATION :
90- AUDI 100 2.8L

AU-0025

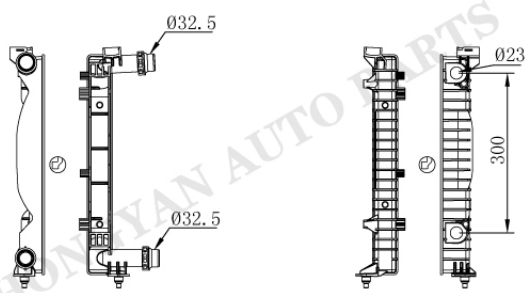

AU-0026AT/MT

Tank size :(R7.5×4.7×4×47.5×412.8)
OEM :8E0121251AP
DPI :
NISSENS :60353
APPLICATION :

AU-0027

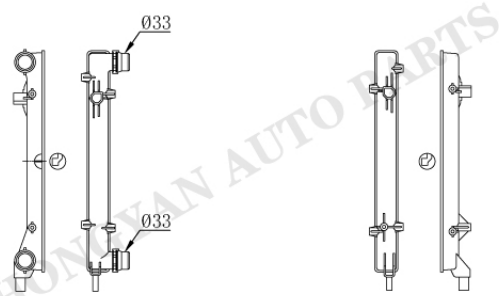

AU-0028

Tank size :(R11.5×4×5×42.5×415)
OEM :1K0121251P/F/E/H/R/AP
DPI :65277A
NISSENS :
APPLICATION :
03- AUDI A3 1.6L
04- VOLKSWAGEN ALTEA 1.2/1.4/1.6/2.0L
05- VOLKSWAGEN LEON 1.4/1.6L
05- VOLKSWAGEN GOLFV 1.4/1.6/2.0L
06- VOLKSWAGEN JETTA 2.5L

HUNYAN AUTO PARTS

AU-0029

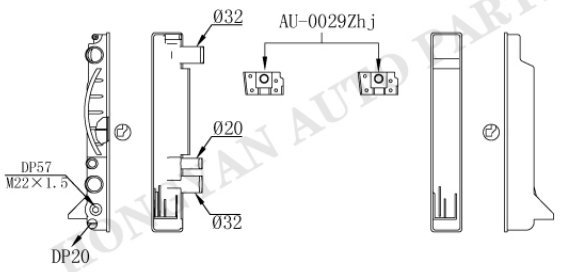

AU-0030MT

Tank size :(R6×4.5×5×58×374.3)
OEM :8A0121251
DPI :1992
NISSENS :60465A
APPLICATION :
91- AUDI 80/90 1.6/1.9/2.0L
88- AUDI COUPE 2.0L
91- AUDI CABRIOLET 1.9/2.0L

AU-0029

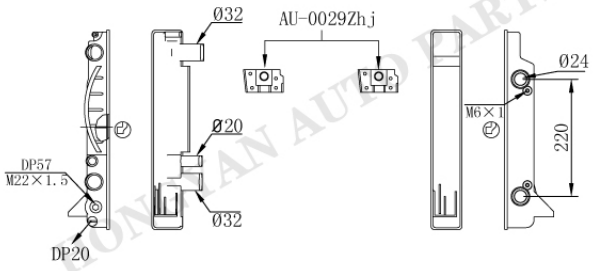

AU-0030AT

Tank size :(R6×4.5×5×58×374.3)
OEM :8A0121251A
DPI :1993
NISSENS :60448A
APPLICATION :
91- AUDI 80/90 1.6/1.9/2.0L
88- AUDI COUPE 2.0L

AU-0031

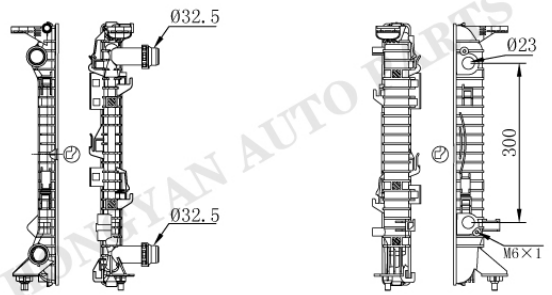

AU-0032AT/MT

Tank size :(R9×4×5×40/52.5×492)
OEM :8K0121151K 8K01211251T
DPI :13188
NISSENS :60321 60323
APPLICATION :
08-14 AUDI A4 1.8/2.0L
10-14 AUDI A5 1.8/2.0/3.2L

AU-0033

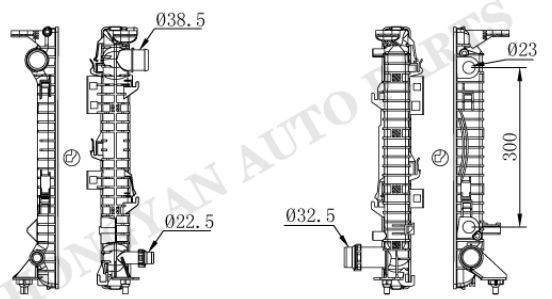

AU-0034AT/MT

Tank size :(R9×4×5×52.5×492)
OEM :8R0121251A
DPI :13278
NISSENS :60317 60318 60324
APPLICATION :
11-14 AUDI A4/S4 3.0/3.2L
12-14 AUDI A5 3.0L
12-14 AUDI A6 3.0L
12-14 AUDI A7 3.0L
10-14 AUDI Q5 3.0/3.2L

AUDI

AU-0033

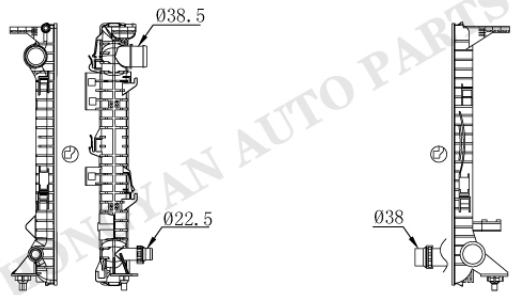

AU-0035

Tank size :(R9×4×5×52.5×492)
OEM :
DPI :
NISSENS :
APPLICATION :

AU-0036



AU-0037

Tank size :(R8.5×4.5×5.2×58×578.5)
OEM :7L0121253/A 7L6121253A/K
DPI :2756 13036
NISSENS :
APPLICATION :
07-14 AUDI Q7 3.0/3.6/4.2L
04-10 PORSCHE CAYENNE 3.2/3.6L

AU-0038

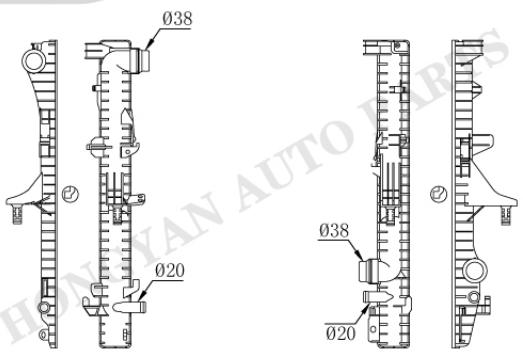

AU-0039

Tank size :(R8.5×4.5×5.2×58×578.5)
OEM :
DPI :
NISSENS :65276A
APPLICATION :
07-14 AUDI Q7 3.0/3.6/4.2L
04-10 PORSCHE CAYENNE 3.2/3.6L

AU-0040



AU-0041

Tank size :(R5×4×6×47.5×322)
OEM :893121251
DPI :1090
NISSENS :60487A
APPLICATION :
88-90 AUDI 80 2.0L

HONGYAN AUTO PARTS

AU-7

AU-0042

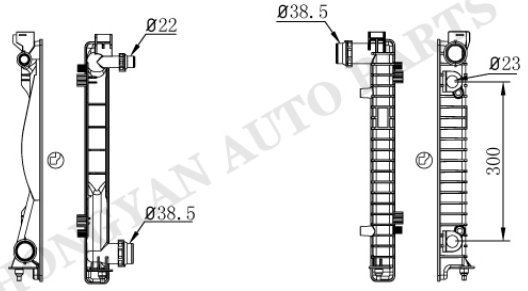

AU-0043AT/MT

Tank size :(R11×4×5×47×454.5)
OEM :
DPI :
NISSENS :
APPLICATION :
04- AUDI A6/S6 2.7D

AU-0031

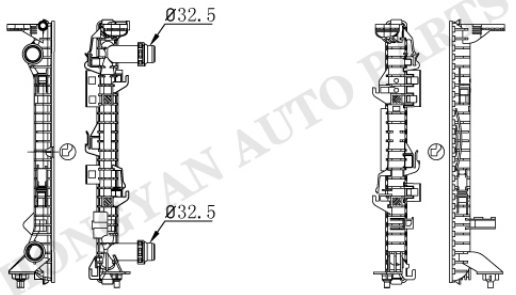

AU-0044

Tank size :(R9×4×5×40×492)
OEM :
DPI :
NISSENS :
APPLICATION :

AU-0045

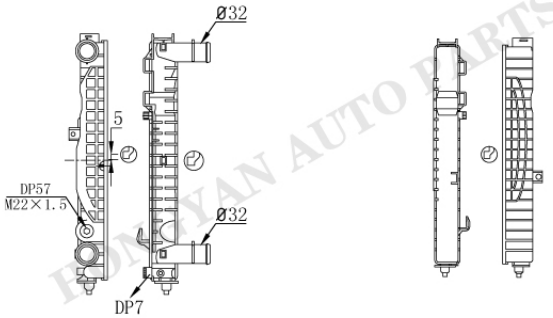

AU-0002

Tank size :(R8×5×6×48.5×412)
OEM :
DPI :
NISSENS :
APPLICATION :

AU-0046

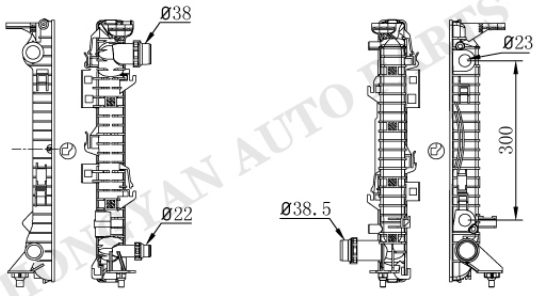

AU-0034AT/MT

Tank size :(R9×4×5×52.2×492)
OEM :8K0121251H
DPI :13188/13278
NISSENS :
APPLICATION :
10-14 AUDI A4 BASE L4 2.0L

AUDI

AU-0047

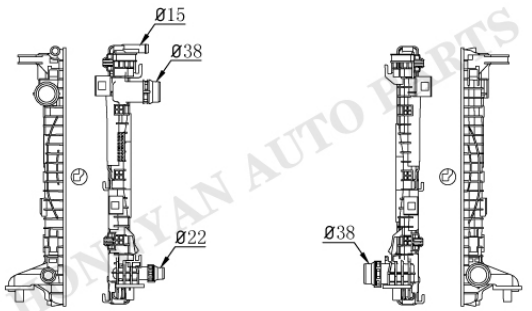

AU-0048

Tank size :(R9×4×5×39.4×486)
OEM :
DPI :
NISSENS :
APPLICATION :

AU-0049

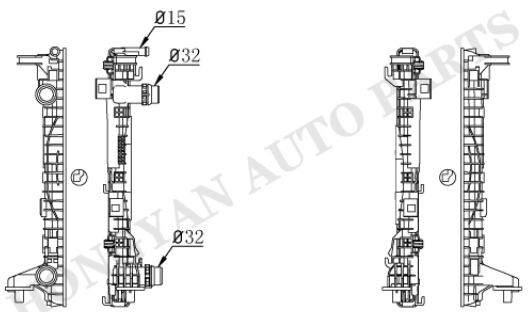

AU-0050

Tank size :(R9×4×5×39.4×486)
OEM :
DPI :
NISSENS :
APPLICATION :

AU-0051

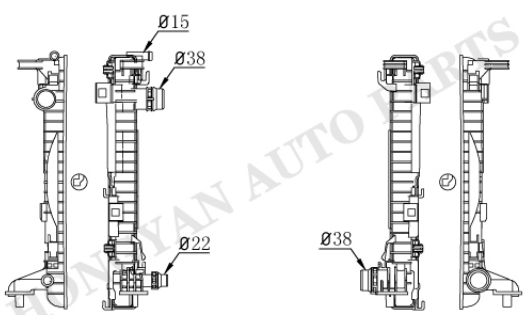

AU-0052

Tank size :(R9×4×5×52×477)
OEM :
DPI :
NISSENS :
APPLICATION :

AU-0053

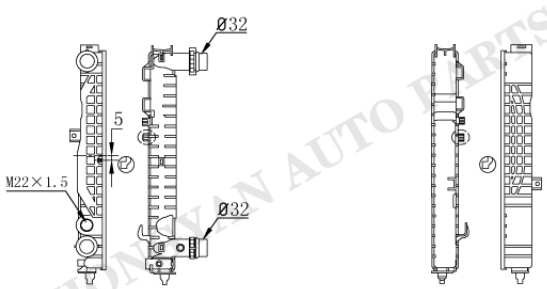

AU-0054

Tank size :(R8.5×5×6×48.5×412)
OEM :8D012125AP/BC
DPI :2192
NISSENS :
APPLICATION :
94- A4/S4 1.6L/1.8L
97- A6/S6 1.8L
01- A6/S6 1.8L

HONGYAN AUTO PARTS

AU-0053

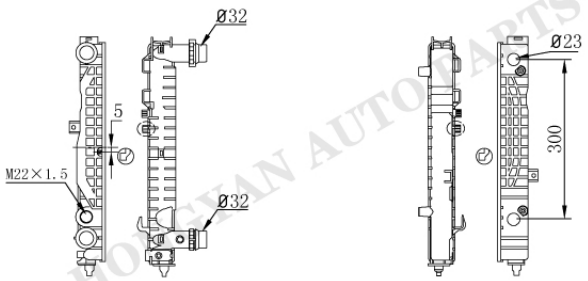

AU-0055AT/MT

Tank size :(R8.5×5×6×48.5×412)
OEM :BD0121251BC
DPI :2034
NISSENS :
APPLICATION :
96-01 AUDI A4 1.8/2.8L
99-05 VOLKSWAGEN PASSAT 1.8/2.0L

AU-0056

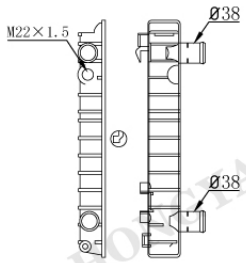

Tank size :(R7×4.5×5×62×446)
OEM :
DPI :
NISSENS :
APPLICATION :

AU-0058



AU-0059

Tank size :(58×323)
OEM :0200982
DPI :
NISSENS :
APPLICATION :
78-91 AUDI 5000

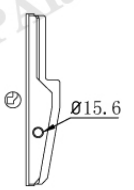

AU-0060

Tank size :(58×323)
OEM :443125251K
DPI :
NISSENS :
APPLICATION :
84-91 AUDI 5000

HONGYAN AUTO PARTS

AUDI

AU-0061

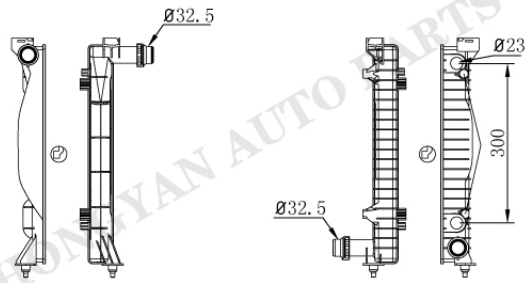

AU-0062AT/MT

Tank size :(R9×5×5×47.5×412)
OEM :8E0121251P
DPI :
NISSENS :60300A
APPLICATION :
00- AUDI A4/S4

AU-0063

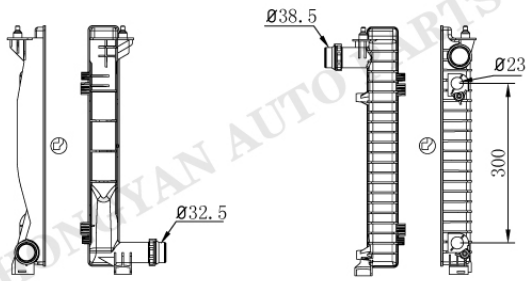

AU-0064AT/MT

Tank size :(R9×4×5×58.5×452.5)
OEM :
DPI :
NISSENS :
APPLICATION :
AUDI A8

AU-0065

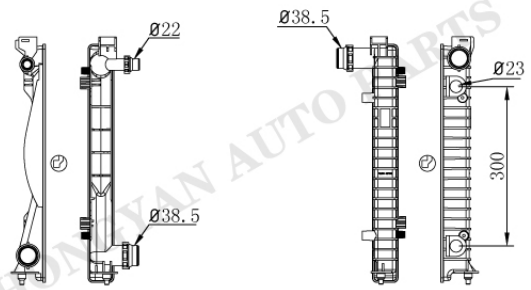

AU-0066AT/MT

Tank size :(R9×5×5×48.5×448)
OEM :
DPI :
NISSENS :
APPLICATION :

AU-0067

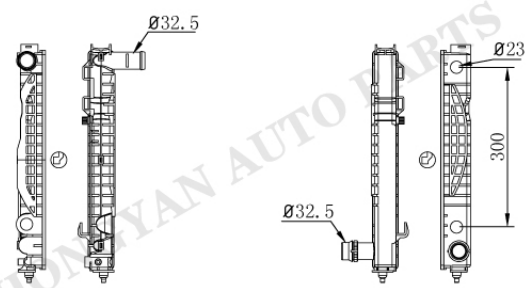

AU-0068AT/MT

Tank size :(R8×6×5×48.5×412)
OEM :4B0121251AF 8D0121251BB/B
DPI :
NISSENS :60495 60228A
APPLICATION :
94-95 AUDI A4

HONGYAN AUTO PARTS

AU-0069

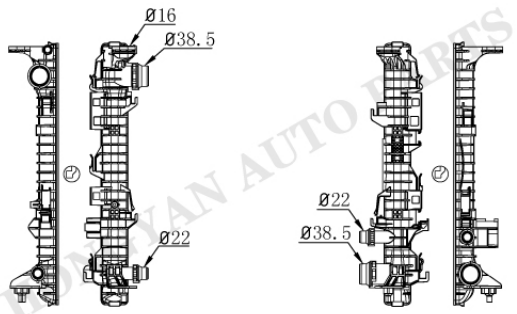

AU-0070

Tank size :(R9×4×5×52×491.5)
OEM :4H0121251C
DPI :
NISSENS :
APPLICATION :
09- AUDI A8 3.0L

AU-0019

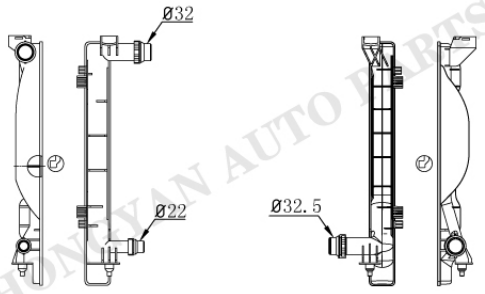

AU-0071

Tank size :(R8×5×5×48×458)
OEM :8E0121251C
DPI :
NISSENS :60306A
APPLICATION :
00-05 AUDI A4 3.0/3.2L
01-04 AUDI A6 3.0/3.2L

AU-0072

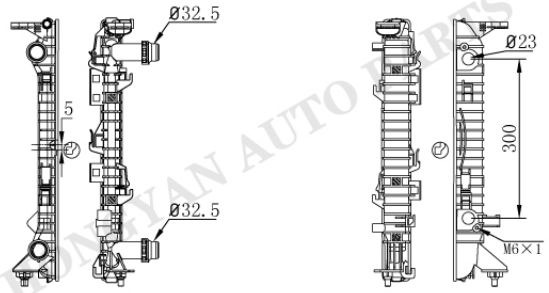

AU-0032AT/MT

Tank size :(R9×4×5×40/52.5×492)
OEM :8K0121251K 8K0121251T
DPI :13188
NISSENS :60321
APPLICATION :
08-14 AUDI A4 1.8/2.0L
10-14 AUDI A5 1.85/2.03.2L

AU-0073



AU-0074

Tank size :(42.2X408.7)
OEM :1K0121251AT/DN/AA/BB/AP
DPI :
NISSENS :
APPLICATION :
05-10 AUDI A3 1.4/1.6/1.8/1.9L

HONGYAN AUTO PARTS

AU-12

AUDI

AU-0075

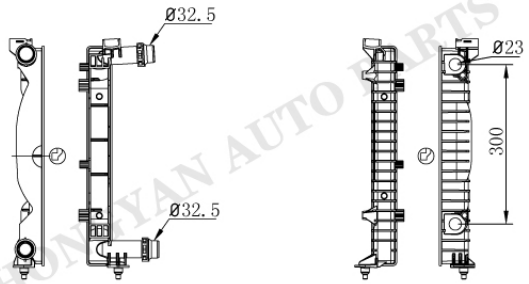

Tank size :(R7.5×4.7×4×47.5×412.8)
OEM :
DPI :
NISSENS :
APPLICATION :

AU-0026AT/MT

Tank size :
OEM :
DPI :
NISSENS :
APPLICATION :

Tank size :
OEM :
DPI :
NISSENS :
APPLICATION :

Tank size :
OEM :
DPI :
NISSENS :
APPLICATION :

HONGYAN AUTO PARTS

	Tank size : OEM : DPI : NISSENS : APPLICATION :
	Tank size : OEM : DPI : NISSENS : APPLICATION :
	Tank size : OEM : DPI : NISSENS : APPLICATION :
	Tank size : OEM : DPI : NISSENS : APPLICATION :

HONGYAN AUTO PARTS

AUDI

	Tank size : OEM : DPI : NISSENS : APPLICATION :
	Tank size : OEM : DPI : NISSENS : APPLICATION :
	Tank size : OEM : DPI : NISSENS : APPLICATION :
	Tank size : OEM : DPI : NISSENS : APPLICATION :

HONGYAN AUTO PARTS

	Tank size : OEM : DPI : NISSENS : APPLICATION :
	Tank size : OEM : DPI : NISSENS : APPLICATION :
	Tank size : OEM : DPI : NISSENS : APPLICATION :
	Tank size : OEM : DPI : NISSENS : APPLICATION :

HONGYAN AUTO PARTS

BMW

BM-0001AT/MT

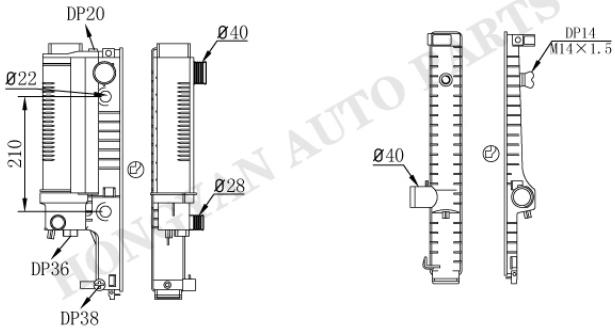

BM-0002

Tank size :(R7×4.5×5×62×458)
:(R10×4.5×5×60×458)
OEM :1723528/898/309/306/8769
DPI :978 979 1295
NISSENS :
APPLICATION :
91-99 BMW 318I 1.8/1.9L
89-95 BMW 525I 2.5L
96-98 BMW Z3 1.9L

BM-0003AT/MT

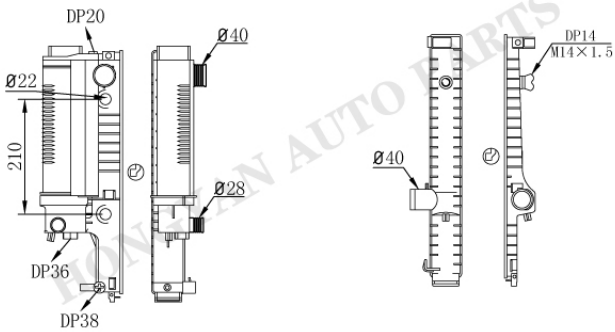

BM-0004

Tank size :(R8×4.5×5×60×458)
:(R5.5×4.5×5×60×458)
OEM :1723528/898/309/306/8769
DPI :978 979 1295
NISSENS :
APPLICATION :
91-99 BMW 318I 1.8/1.9L
89-95 BMW 525I 2.5L
96-98 BMW Z3 1.9L

BM-0001AT/MT

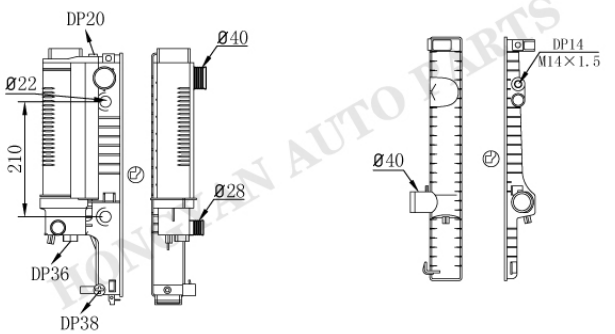

BM-0005

Tank size :(R7×4.5×5×62×458)
OEM :(R10×4.5×5×60×458)
DPI :
NISSENS :60607A
APPLICATION :
95- BMW 520I/523I/528I

BM-0006AT/MT

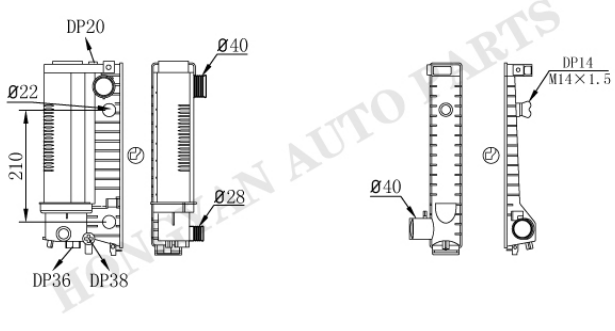

BM-0007

Tank size :(R5.5×4×5×60×347.4)
OEM :1723537 1719302/3/4/5
1712971/982
DPI :
NISSENS :60735A
APPLICATION :
82- BMW 3E30 316I/318I
90- BMW 3E36 316I/318I/320I/323I/325I
88- BMW 5E34 518I/520I/525I

HONGYAN AUTO PARTS

BM-1

BMW

BM-0008AT/MT

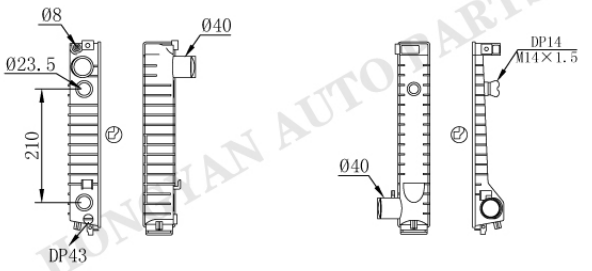

BM-0007

Tank size :(R5.5×4×5×60×347.4)
OEM :1712005
DPI :
NISSENS :60742
APPLICATION :
80- BMW 5E28 525I/528I

BM-0009AT/MT

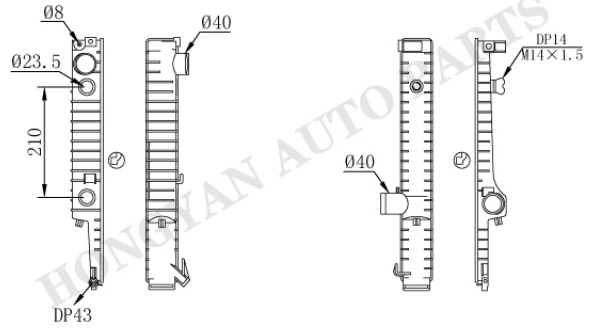

BM-0002

Tank size :(R10×4.5×5×60×458)
OEM :1723825/467/468/689/398
DPI :941 942 952 973 975 1465
1753 1841 1842 1843 2626
NISSENS :60618A
APPLICATION :

BM-0010AT/MT

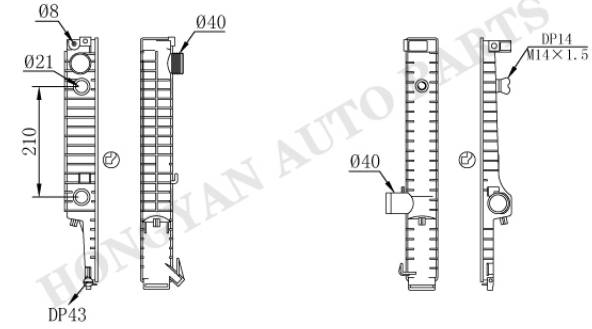

BM-0004

Tank size :(R5.5×4.5×5×60×458)
OEM :1723825/467/468/689/398
DPI :941 942 952 973 975 1465
1753 1841 1842 1843 2626
NISSENS :60618A
APPLICATION :

BM-0011

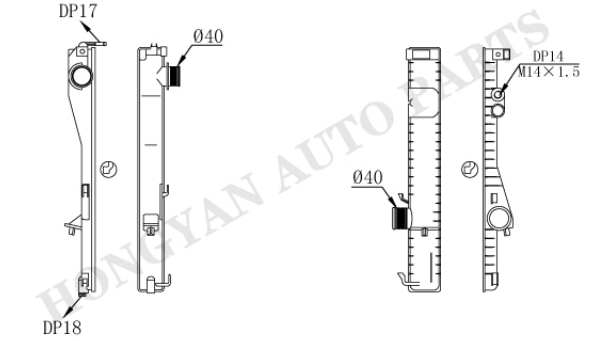

BM-0012

Tank size :(R5.5×4×5×60×458)
OEM :1702969 1737711/813
DPI :
NISSENS :
APPLICATION :
96-98 BMW 528I 2.8L
97-98 BMW 540I 4.4L
95-98 BMW 740I 4.4L
96-98 BMW 750I 5.4L
94-99 BMW 850CI 5.4L

HONGYAN AUTO PARTS

BMW

BM-0013

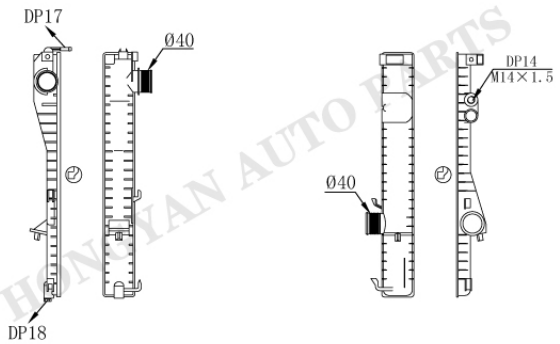

BM-0012

Tank size :(R5.5×4×5×60×458)
OEM :1702969 1737711/813
DPI :1401 2037
NISSENS :60752A
APPLICATION :
96-98 BMW 528I 2.8L
97-98 BMW 540I 4.4L
95-98 BMW 740I 4.4L
96-98 BMW 750I 5.4L
94-99 BMW 850CI 5.4L

BM-0014

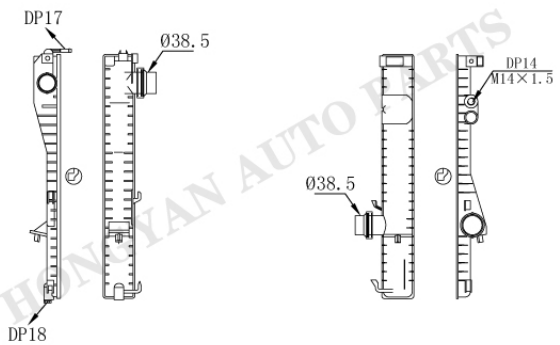

BM-0015

Tank size :(R5.5×4×5×60×458)
OEM :
DPI :
NISSENS :
APPLICATION :
96-98 BMW 528I 2.8L
97-98 BMW 540I 4.4L
95-98 BMW 740I 4.4L
96-98 BMW 750I 5.4L
94-99 BMW 850CI 5.4L

BM-0016

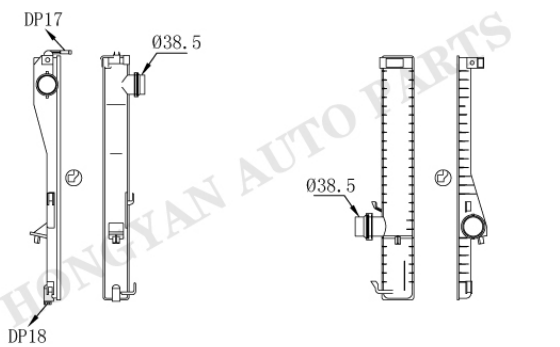

BM-0017

Tank size :(R5.5×4×5×60×458)
OEM :1436060/1
DPI :2284 2285
NISSENS :60648A
APPLICATION :
01-05 BMW 525I 2.5L
99-00 BMW 528I 2.8L
01-03 BMW 530I 3.0L
99-03 BMW 540I 4.4L

BM-0018

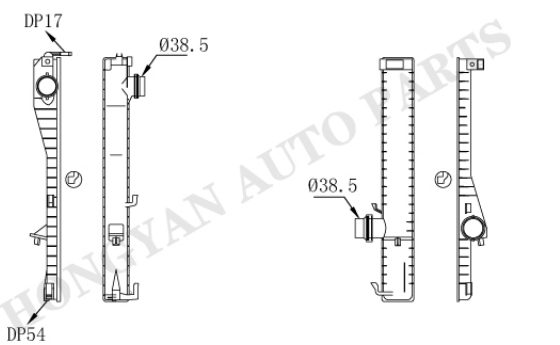

BM-0017

Tank size :(R5.5×4×5×60×458)
OEM :17111436060/1/2/3
DPI :2284 2285
NISSENS :60648A
APPLICATION :
01-05 BMW 525I 2.5L
99-00 BMW 528I 2.8L
01-03 BMW 530I 3.0L
99-03 BMW 540I 4.4L

HONGYAN AUTO PARTS

BMW

BM-0019

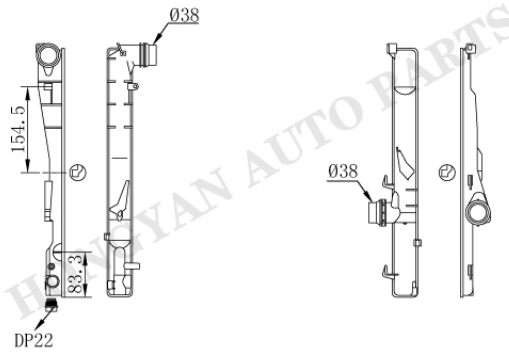

BM-0020

Tank size :(R8×4.5×5×47.5×466.5)
OEM :9071518
DPI :2636
NISSENS :60782A
APPLICATION :
01-05 BMW 320I/323I/325I/328I/330I
03-06 BMW Z4 2.5/3.0L

BM-0021

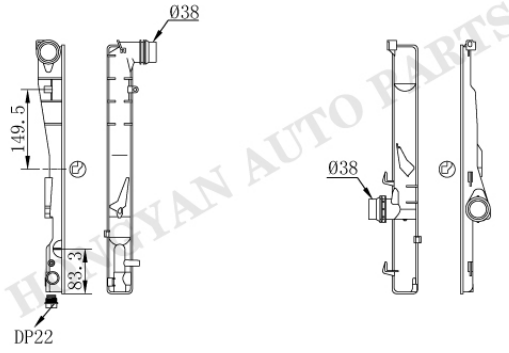

BM-0020

Tank size :(R8×4.5×5×47.5×466.5)
OEM :
DPI :
NISSENS :
APPLICATION :
01-05 BMW 320I/323I/325I/328I/330I
03-06 BMW Z4 2.5/3.0L

BM-0022

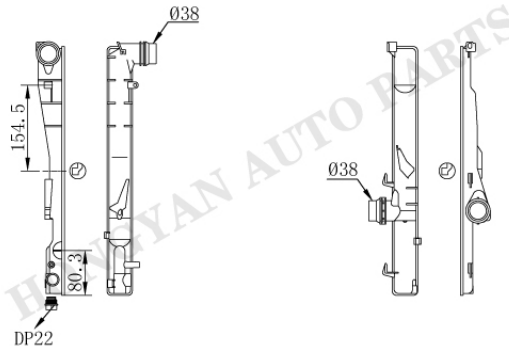

BM-0020

Tank size :(R8×4.5×5×47.5×466.5)
OEM :
DPI :
NISSENS :
APPLICATION :
01-05 BMW 320I/323I/325I/328I/330I
03-06 BMW Z4 2.5/3.0L

BM-0023

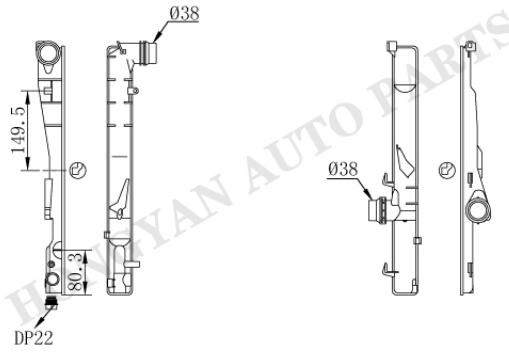

BM-0020

Tank size :(R8×4.5×5×47.5×466.5)
OEM :
DPI :
NISSENS :
APPLICATION :
01-05 BMW 320I/323I/325I/328I/330I
03-06 BMW Z4 2.5/3.0L

HUAYAN AUTO PARTS

BMW

BM-0024

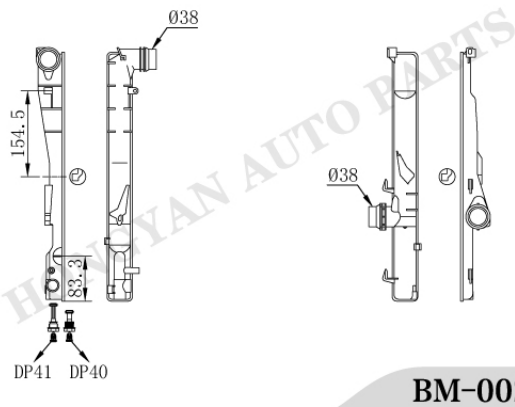

BM-0020

Tank size :(R8×4.5×5×47.5×466.5)
OEM :
DPI :2771
NISSENS :
APPLICATION :
01-05 BMW 320I/323I/325I/328I/330I
03-06 BMW Z4 2.5/3.0L
04-06 BMW X3 2.5/3.0L

BM-0025

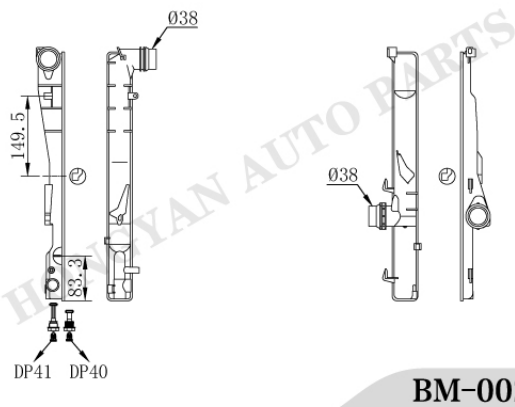

BM-0020

Tank size :(R8×4.5×5×47.5×466.5)
OEM :
DPI :
NISSENS :
APPLICATION :
01-05 BMW 320I/323I/325I/328I/330I
03-06 BMW Z4 2.5/3.0L
04-06 BMW X3 2.5/3.0L

BM-0026

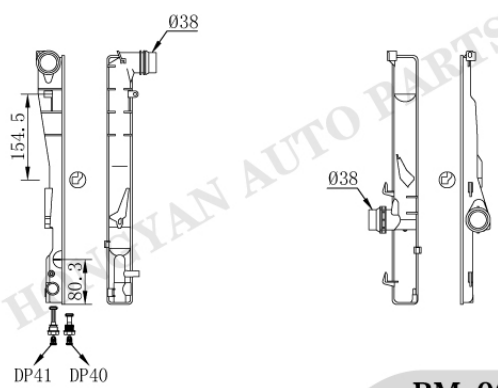

BM-0020

Tank size :(R8×4.5×5×47.5×466.5)
OEM :
DPI :
NISSENS :
APPLICATION :
01-05 BMW 320I/323I/325I/328I/330I
03-06 BMW Z4 2.5/3.0L
04-06 BMW X3 2.5/3.0L

BM-0027

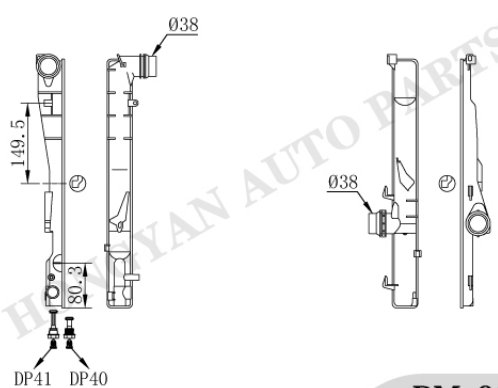

BM-0020

Tank size :(R8×4.5×5×47.5×466.5)
OEM :
DPI :
NISSENS :
APPLICATION :
01-05 BMW 320I/323I/325I/328I/330I
03-06 BMW Z4 2.5/3.0L
04-06 BMW X3 2.5/3.0L

HUAYAN AUTO PARTS

BM-0028

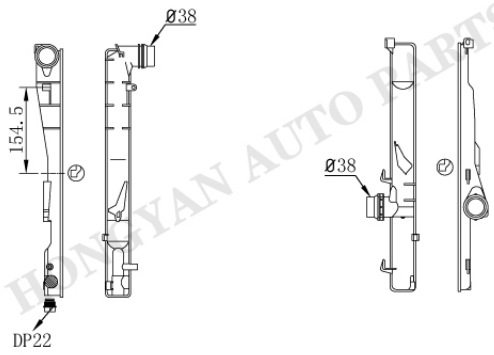

BM-0020

Tank size :(R8×4.5×5×47.5×466.5)
OEM :
DPI :2635 2636
NISSENS :
APPLICATION :
01-05 BMW 320I/323I/325I/328I/330I
03-06 BMW Z4 2.5/3.0L
04-06 BMW X3 2.5/3.0L

BM-0029

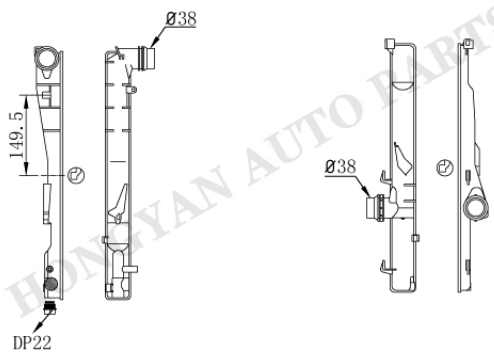

BM-0020

Tank size :(R8×4.5×5×47.5×466.5)
OEM :
DPI :2635 2636
NISSENS :
APPLICATION :
01-05 BMW 320I/323I/325I/328I/330I
03-06 BMW Z4 2.5/3.0L
04-06 BMW X3 2.5/3.0L

BM-0030

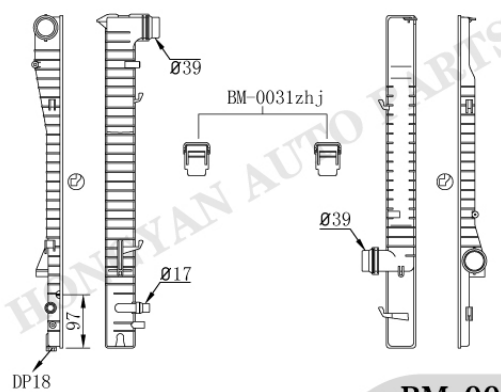

BM-0031

Tank size :(R5.5×4×5×55.5×625)
OEM :1439101/3 7544668 7554668
DPI :2593 2594 2625
NISSENS :60787A 60788A
APPLICATION :
00-06 BMW X5 4.4/4.6/4.8L
01-08 BMW X5 3.0L

BM-0032

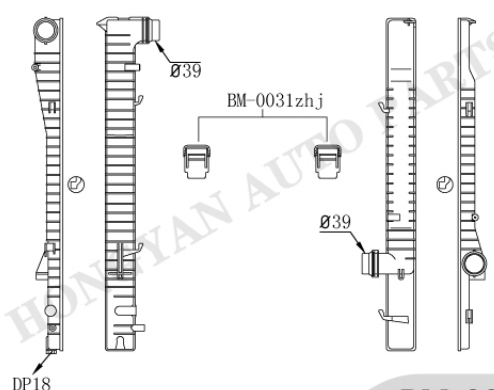

BM-0031

Tank size :(R5.5×4×5×55.5×625)
OEM :1439104 7544669
1710544669 17101439104
DPI :
NISSENS :60789A
APPLICATION :
00- BMW E53 3.0L

BMW

BM-0033

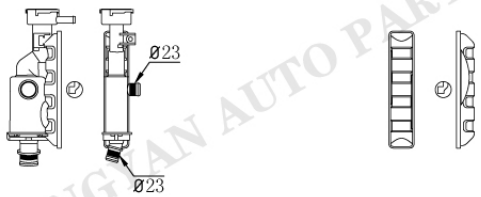

BM-0034

Tank size :(R8×4.2×4.5×47.2×146.2)
OEM :
DPI :
NISSENS :
APPLICATION :

BM-0035

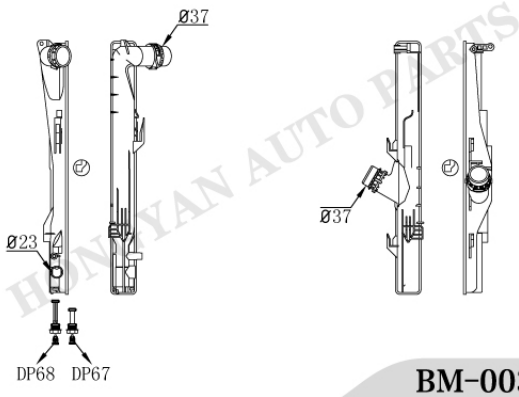

BM-0036

Tank size :(R9×4.5×5×48×476)
OEM :
DPI :
NISSENS :
APPLICATION :
04- BMW 1 E87 116I/120I/128I
05- BMW 3 E91/2/3
09- BMW Z4 E89
09- BMW X1 E84

BM-0035

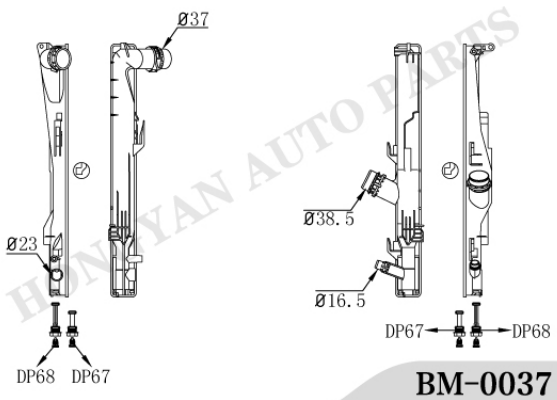

BM-0037

Tank size :(R9×4.5×5×48×476)
OEM :7521046/936 171117542199
DPI :2882
NISSENS :60786A
APPLICATION :
04- BMW 1 E87 116I/120I/128I
05- BMW 3 E91/2/3
09- BMW Z4 E89
09- BMW X1 E84

BM-0038

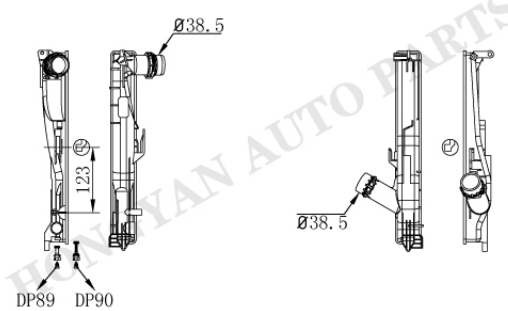

BM-0039

Tank size :(R9×4.5×5×48×363)
OEM :
DPI :2973
NISSENS :
APPLICATION :
07 BMW 335 3.0L

BM-7

HONGYAN AUTO PARTS

BMW

BM-0038

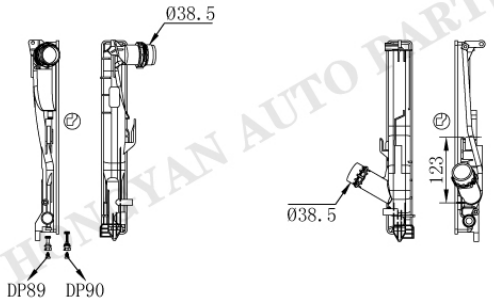

BM-0040

Tank size :(R9×4.5×5×48×363)
OEM :
DPI :
NISSENS :
APPLICATION :

BM-0041

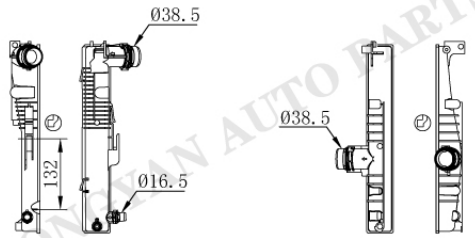

BM-0042

Tank size :(R4.5×4.3×5.3×50×353.5)
OEM :1711760056
DPI :
NISSENS :60815
APPLICATION :
11- BMW 3 F30/F31/F35

BM-0043

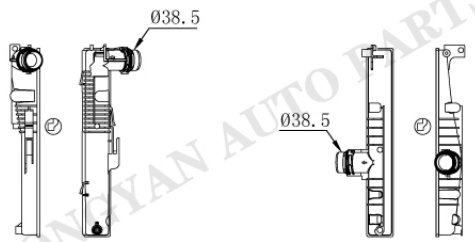

BM-0042

Tank size :(R4.5×4.3×5.3×50×353.5)
OEM :17117600511
DPI :
NISSENS :60814/60816
APPLICATION :
11- BMW 3 F30/F31/F35

BM-0041

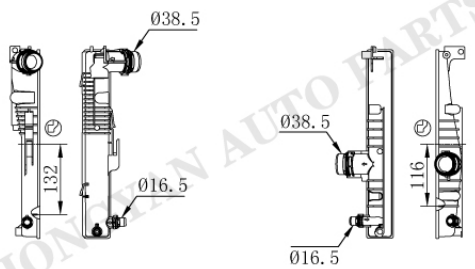

BM-0044

Tank size :(R4.5×4.3×5.3×50×353.5)
OEM :17117618807
DPI :
NISSENS :60817
APPLICATION :
11- BMW 3 F30/F31/F35

HONGYAN AUTO PARTS

BMW

BM-0045

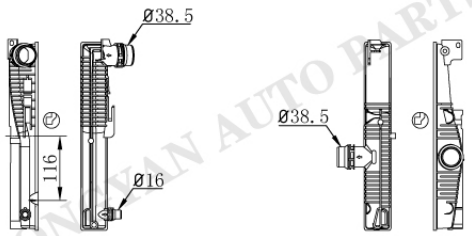

BM-0046

Tank size :(R4.5×4.3×5.3×50×353.5)
OEM :
DPI :
NISSENS :
APPLICATION :
11- BMW5

BM-0047

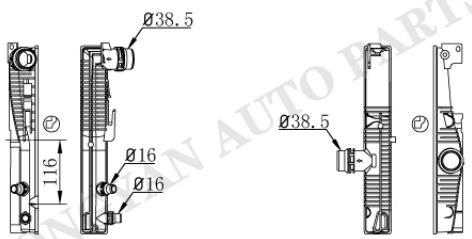

BM-0046

Tank size :(R4.5×4.3×5.3×50×353.5)
OEM :
DPI :
NISSENS :
APPLICATION :
11- BMW5

BM-0048

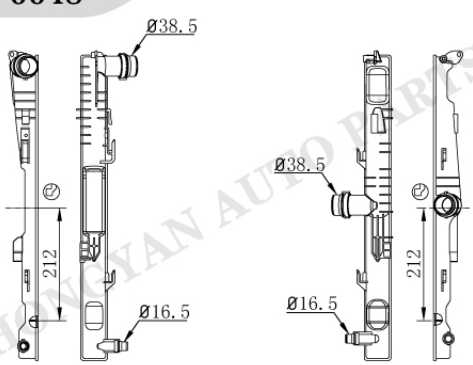

BM-0049

Tank size :(R4.5×4×5×50×573.5)
OEM :17117593842
DPI :
NISSENS :60811
APPLICATION :
10- BMW X3 F25 28IX

BM-0050



BM-0051AT/MT

Tank size :(R××67×479)
OEM :014381127
DPI :298 838 910 914
NISSENS :
APPLICATION :
78-84 BMW 733I 3.2L
85-86 BMW 735I 3.5L

BM-9

BMW

BM-0052AT/MT

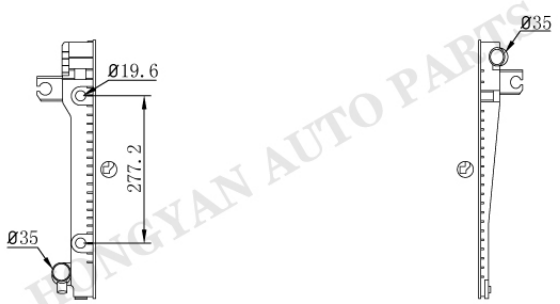

BM-0053

Tank size :(R×××51×486)
OEM :2152011210
DPI :825 906 940 842 862 938
NISSENS :
APPLICATION :
84-87 BMW 325I 2.5/2.7L

BM-0054

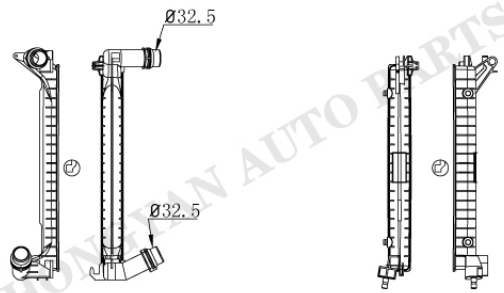

BM-0055

Tank size :(R5×3.5×3.5×41.5×389.5)
OEM :17117788753
DPI :
NISSENS :69704A
MODINE :
01-06 MINI ONE(R50-R53) 1.4L(DIESEL)

BM-0056

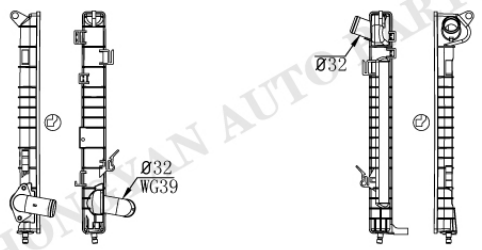

BM-0057

Tank size : (R8×5×6×43×417)
OEM :17107509714 17107570821
DPI :2747
NISSENS :69703A
MODINE :
01-06 MINI COOPER(R50-R53) 1.6L

BM-0058

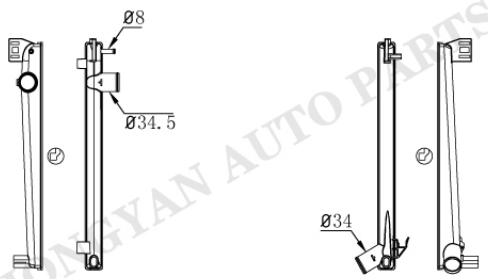

BM-0059

Tank size : (R5×4.0×3.5×34×428)
OEM :8MK376754591/17117535099
DPI :13167
NISSENS :69706
APPLICATION :
07-15 MINI COOPER 1.6L

HONGYAN AUTO PARTS

BMW

BM-0060

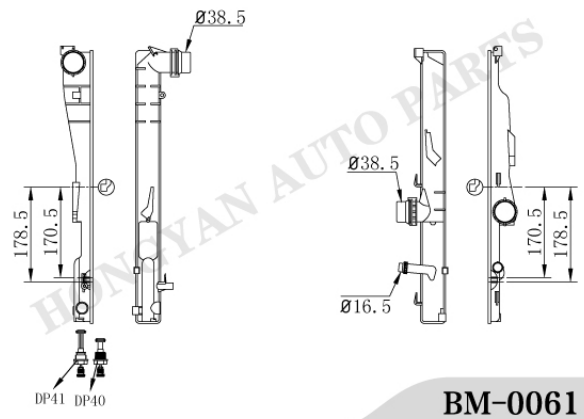

BM-0061

Tank size :(R8×4.5×5×47.5×514)
OEM :17113415693
DPI :13277
NISSENS :60807
APPLICATION :
07-10 BMW X3 3.0L

BM-0060

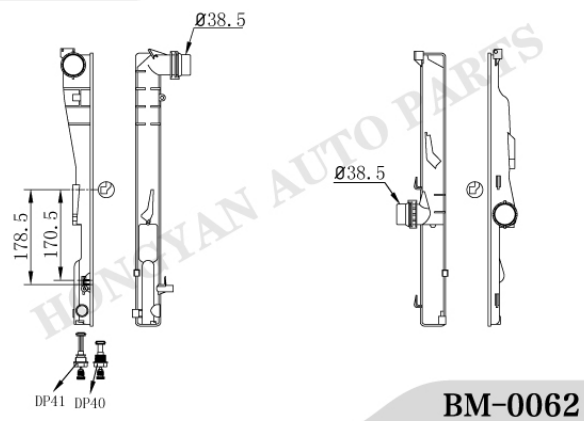

BM-0062

Tank size :(R8×4.5×5×47.5×514)
OEM :
DPI :
NISSENS :
APPLICATION :
07-10 BMW X3 3.0L

BM-0063

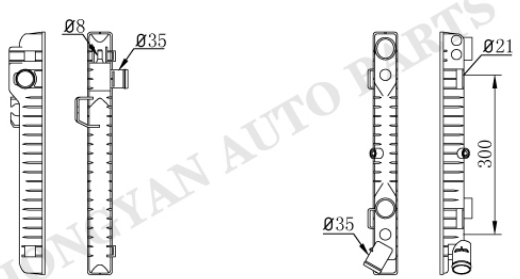

BM-0064AT/MT

Tank size :(R5.5×4×5.5×46×456)
OEM :1711222591
DPI :967
NISSENS :60667 60652 60639
APPLICATION :
88-91 BMW M3 2.3L

BM-0065

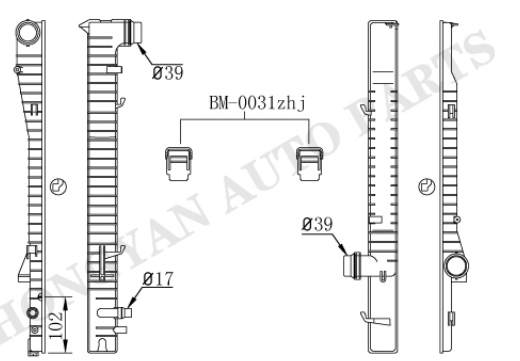

BM-0031

Tank size :(R5.5×4×5×55.5×625)
OEM :1439101/3 7544668 7554668
DPI :2593 2594 2625
NISSENS :60787A 60788A
APPLICATION :
00-06 BMW X5 4.4/4.6/4.8L
01-08 BMW X5 3.0L

HONGYAN AUTO PARTS

BM-11

BMW

BM-0066

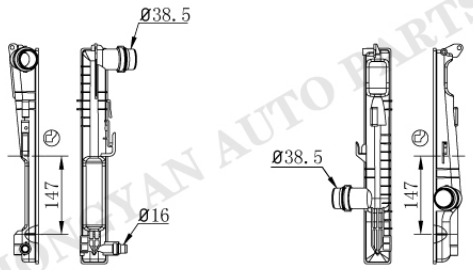

BM-0067

Tank size :(R4.5×5×4×50×405)
OEM :17117593843 17117823568
DPI :13370
NISSENS :60809
APPLICATION :
13-17 BMW X3 2.0L

BM-0068

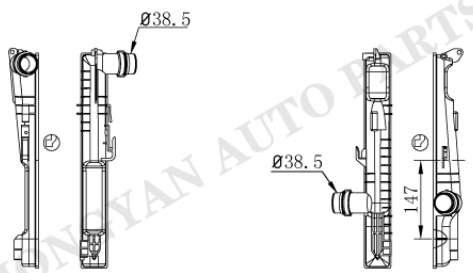

BM-0067

Tank size :(R4.5×5×4×50×405)
OEM :
DPI :
NISSENS :
APPLICATION :
11-17 BMW X3 2.0/3.0L

BM-0013

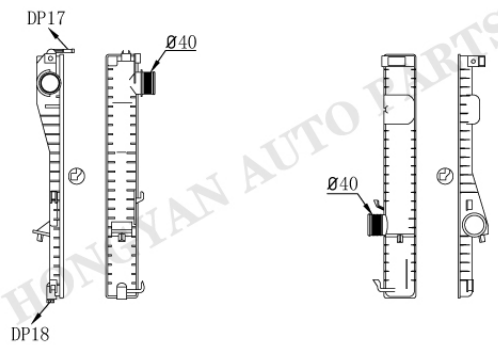

BM-0069

Tank size :(R5.5×4×5×60×458)
OEM :
DPI :
NISSENS :
APPLICATION :
96-98 BMW 528I 2.8L
97-98 BMW 540I 4.4L
95-98 BMW 740I 4.4L
96-98 BMW 750I 5.4L
94-99 BMW 850CI 5.4L

BM-0070

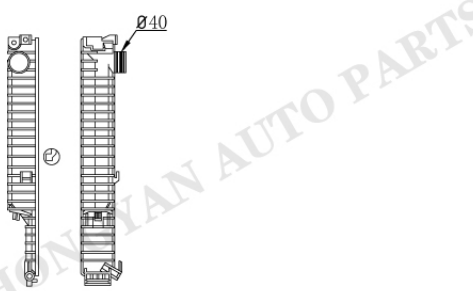

Tank size :(R6.5×5×4.5×63×448)
OEM :
DPI :
NISSENS :
APPLICATION :

HONGYAN AUTO PARTS

BMW

BM-0072



BM-0073

Tank size :(R8×4.5×5×43×418)
OEM :
DPI :
NISSENS :
APPLICATION :
MINI COOPER

BM-0045

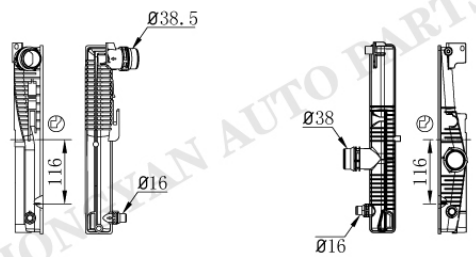

BM-0074

Tank size :(R4.5×4.3×5.3×50×353.5)
OEM :
DPI :
NISSENS :
APPLICATION :
11- BMW5

BM-0045

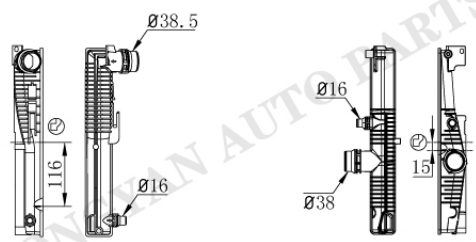

BM-0075

Tank size :(R4.5×4.3×5.3×50×353.5)
OEM :
DPI :
NISSENS :
APPLICATION :
11- BMW5

BM-0076

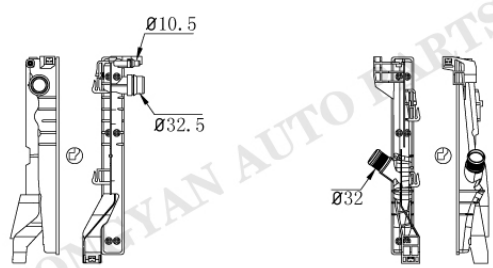

BM-0077

Tank size :(R5×3.5×5.2×42×371)
OEM :17117617635 MC301010
DPI :13544
NISSENS :
APPLICATION :
14-17 MINI COOPER 2.0L L4(TURBOCHARGED)

HONGYAN AUTO PARTS

BM-13

	Tank size : OEM : DPI : NISSENS : APPLICATION :
	Tank size : OEM : DPI : NISSENS : APPLICATION :
	Tank size : OEM : DPI : NISSENS : APPLICATION :
	Tank size : OEM : DPI : NISSENS : APPLICATION :

HONGYAN AUTO PARTS

	Tank size : OEM : DPI : NISSENS : APPLICATION :
	Tank size : OEM : DPI : NISSENS : APPLICATION :
	Tank size : OEM : DPI : NISSENS : APPLICATION :
	Tank size : OEM : DPI : NISSENS : APPLICATION :

HONGYAN AUTO PARTS

BYD

BY-0001

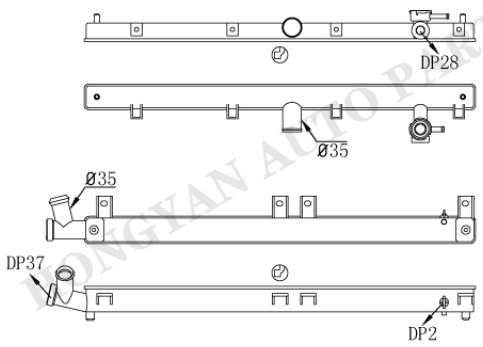

BY-0002

Tank size :(R9×4×5×48×736)
OEM :
DPI :
NISSENS :
APPLICATION :

BY-0003

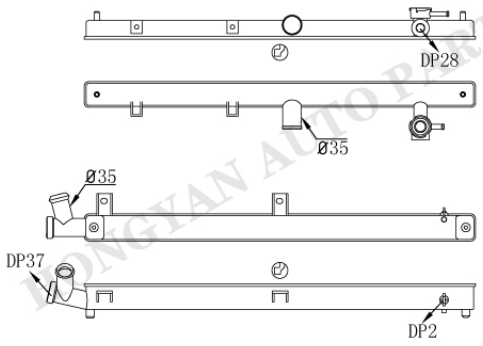

BY-0004

Tank size :(R9×4×5×48×736)
OEM :
DPI :
NISSENS :
APPLICATION :

BY-0005

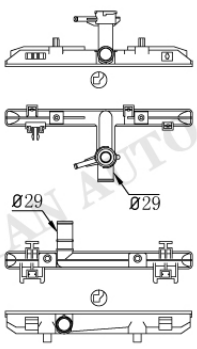

BY-0006

Tank size :(R8×4.5×5×32×352)
OEM :
DPI :
NISSENS :
APPLICATION :

BY-0007

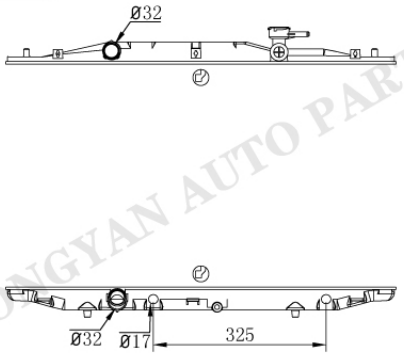

BY-0008AT/MT

Tank size :(R7.5×4×4.5×32/47×734)
OEM :
DPI :
NISSENS :
APPLICATION :
BYD S6

HONGYAN AUTO PARTS

BY-1

BYD

	Tank size : OEM : DPI : NISSENS : APPLICATION :
	Tank size : OEM : DPI : NISSENS : APPLICATION :
	Tank size : OEM : DPI : NISSENS : APPLICATION :
	Tank size : OEM : DPI : NISSENS : APPLICATION :

HONGYAN AUTO PARTS

CHRYSLER/DODGE/JEEP

CH-0001

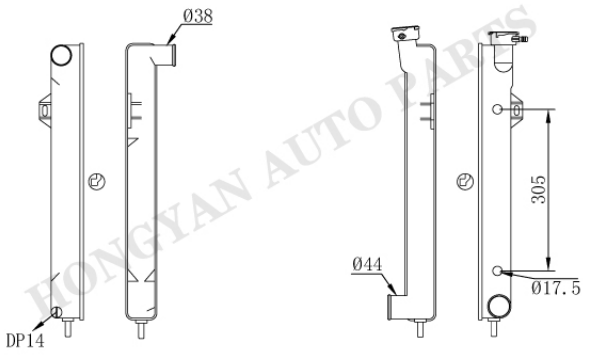

CH-0002AT/MT

Tank size :(R13.5×6×6.5×58×518.8)
OEM :52006644 4734104
52079598AB
DPI :1394 2230 2206
NISSENS :609901
APPLICATION :
93-97 JEEP GRAND CHERLKEE 5.2L

CH-0003AT/MT

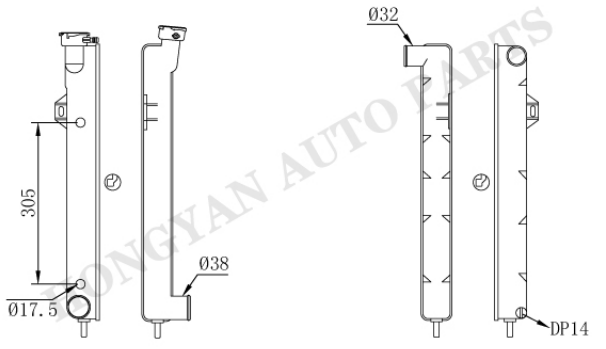

CH-0004

Tank size :(R13.5×6×6.5×58×518.8)
OEM :52005166/72 52028378
4734103/5
DPI :1395 1396 2231 2232
NISSENS :609891
APPLICATION :
93-97 JEEP GRAND CHERLKEE 4.0L

CH-0005AT/MT

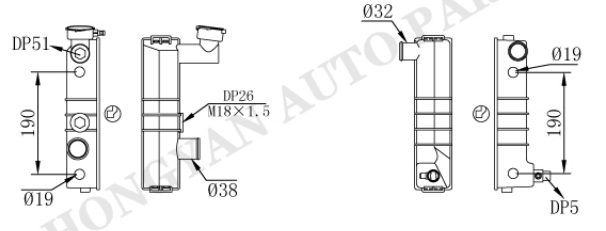

CH-0006AT/MT

Tank size :(R4×6.5×5×70×284.5)
OEM :52028133/9118/06340
DPI :2340 1193 1592
NISSENS :
APPLICATION :
91-01 JEEP CHEROKEE 4.0L

CH-0005-1AT

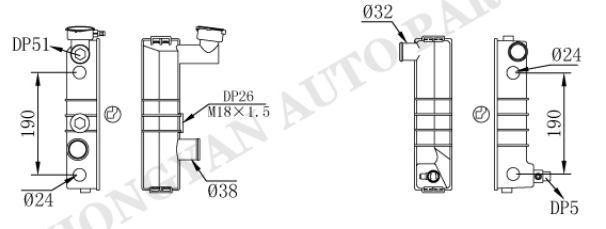

CH-0006-1AT

Tank size :(R4×6.5×5×70×284.5)
OEM :52028133/9118/06340
DPI :
NISSENS :
APPLICATION :
91-01 JEEP CHEROKEE 4.0L

HONGYAN AUTO PARTS

CHRYSLER/DODGE/JEEP

CH-0007AT/MT

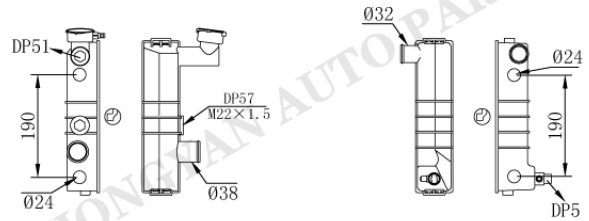

CH-0006-1AT

Tank size :(R4×6.5×5×70×284.5)
OEM :52028133/9118/06340
DPI :
NISSENS :
APPLICATION :
91-01 JEEP CHEROKEE 4.0L

CH-0008AT/MT

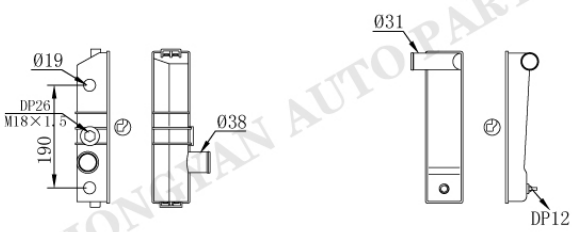

CH-0009

Tank size :(R4×6.5×5×70×284.5)
(R14×6×7×70×284.5)
OEM :8952002094/584/3156/
517/3158/3159/3167/
3694/3695/3696
DPI :78 121
NISSENS :
APPLICATION :
87-90 JEEP CHEROKEE 4.0L

CH-0010AT/MT

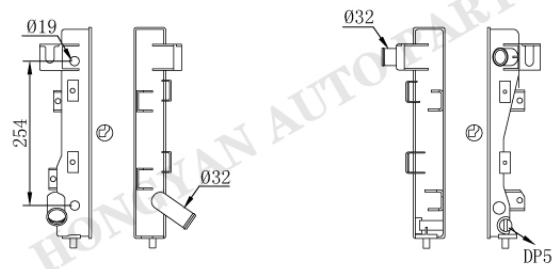

CH-0011

Tank size :(R5×6.5×5×60×396)
OEM :4592052
DPI :1390
NISSENS :609771
APPLICATION :
93-96 CHRYSLER CONCORDE 3.3/3.5L
93-97 CHRYSLER INTREPID 3.3/3.5L
94-96 CHRYSLER NEW YORKER 3.5L
93-97 DOGE INTREPID 3.3/3.5L

CH-0012AT/MT

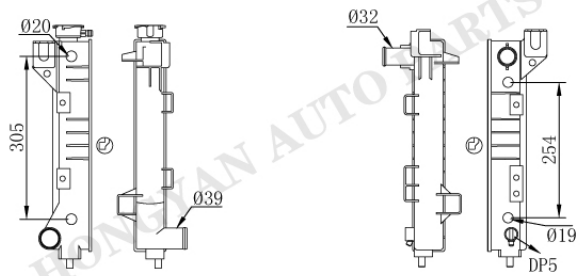

CH-0013AT/MT

Tank size :(R8×4×6×60×398)
OEM :4682587AB 4682588
DPI :1862 1852
NISSENS :60999A
APPLICATION :
96-00 CHRYSLER GRAND VOYAGER 3.8L
96-00 CHRYSLER TOWN&COUNTRY 3.3/3.8L
96-00 DODGE CARAVAN 2.4/3.0/3.3L

HONGYAN AUTOPARTS

CHRYSLER/DODGE/JEEP

CH-0014AT/MT

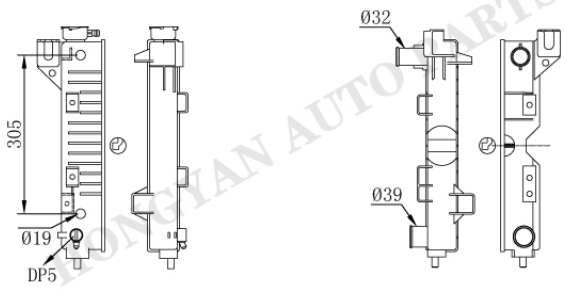

CH-0015

Tank size :(R8×4×6×60×398)
OEM :4682785/976/976AB
DPI :1850
NISSENS :60984
APPLICATION :
96-00 CHRYSLER GRAND VOYAGER 3.8L
96-00 CHRYSLER TOWN&COUNTRY 3.3/3.8L
96-00 DODGE CARAVAN 2.4/3.0/3.3L

CH-0016

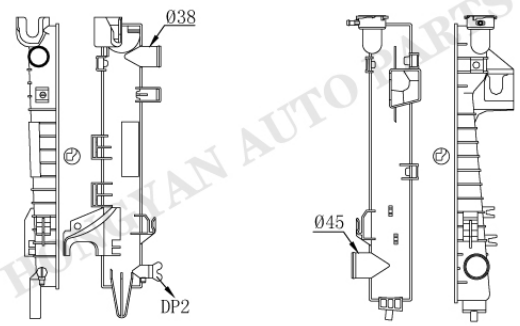

CH-0017

Tank size :(R4.5×5.5×5×77.5×497.5)
OEM :52028830AG
DPI :2480
NISSENS :60918
APPLICATION :
02-08 DOGE RAM 1500 4.7/5.9L

CH-0018

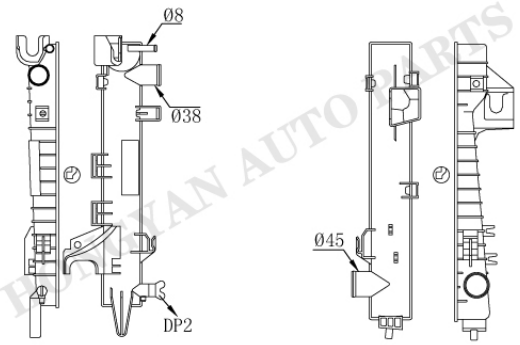

CH-0019

Tank size :(R4.5×5.5×5×77.5×497.5)
OEM :52028829AE
DPI :2479
NISSENS :60917
APPLICATION :
02-03 DODGE RAM 1500 3.7/4.7/5.7L

CH-0020

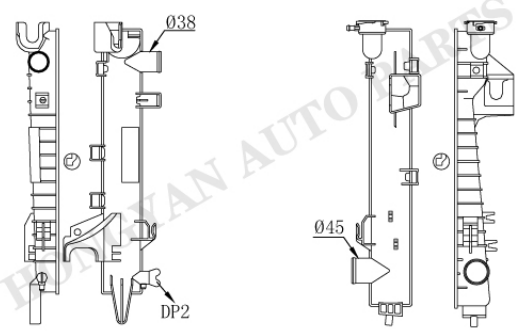

CH-0017

Tank size :(R4.5×5.5×5×77.5×497.5)
OEM :
DPI :
NISSENS :
APPLICATION :
02-08 DOGE RAM 1500 4.7/5.9L

RONGYAN AUTO PARTS

CHRYSLER/DODGE/JEEP

CH-0021

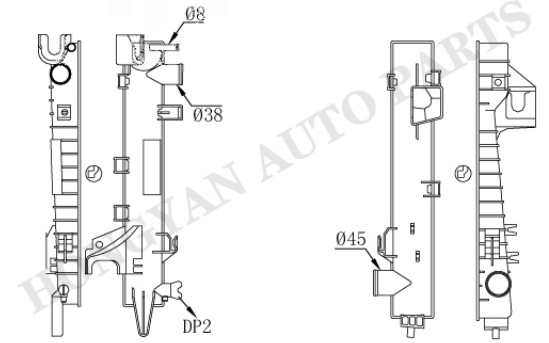

CH-0019

Tank size :(R4.5×5.5×5×77.5×497.5)
OEM :
DPI :
NISSENS :
APPLICATION :
02-03 DODGE RAM 1500 3.7/4.7/5.7L

CH-0022

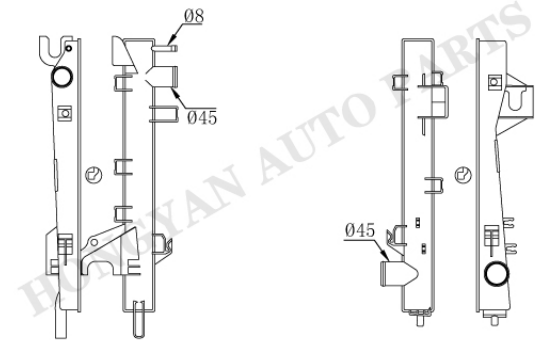

CH-0023

Tank size :(R4.5×5.5×5×60.5×511.5)
OEM :
DPI :
NISSENS :
APPLICATION :
02-03 DODGE RAM 1500 3.7/4.7/5.7L

CH-0024

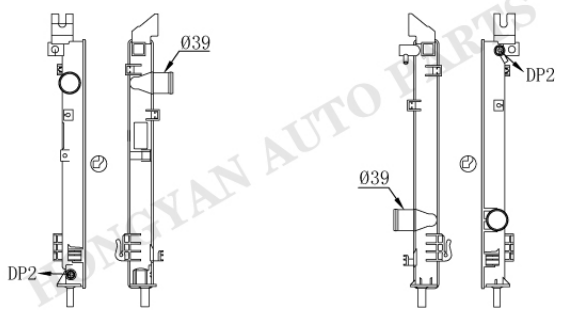

CH-0025

Tank size :(R8×4.5×5×47.5×466.5)
OEM :5102435AA
DPI :2702
NISSENS :610142 61028
APPLICATION :
04-06 CHRYSLER PACIFICA 3.5/3.8L
07-08 CHRYSLER PACIFICA 4.0L

CH-0026

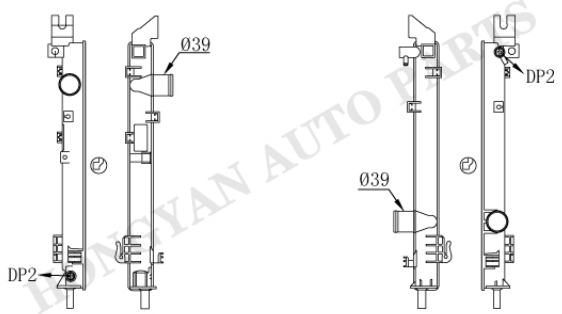

CH-0025

Tank size :(R8×4.5×5×47.5×466.5)
OEM :68002782AA
DPI :13178
NISSENS :
APPLICATION :
07-08 CHRYSLER PACIFICA 3.8L

HUNGYAN AUTO PARTS

CHRYSLER/DODGE/JEEP

CH-0027

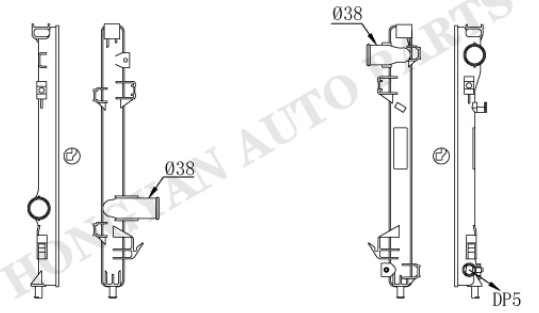

CH-0028

Tank size :(R11.5×4×5×42×489.5)
OEM :5317691AA/2AA 5170742AA
DPI :2766 2767
NISSENS :61014A
APPLICATION :
05-08 CHRYSLER 300 2.7/3.5/5.7/6.1L
06-08 DODGE CHARGER 2.7/3.5/5.7/6.1L
05-08 DODGE MAGNUM 2.7/3.5/5.7/6.1L

CH-0029AT/MT

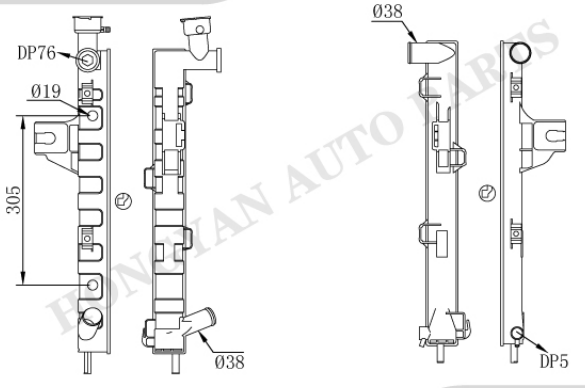

CH-0030

Tank size :(R4.5×6.5×5×60×572)
OEM :52079428/AB/AD
DPI :2262
NISSENS :61009
APPLICATION :
99-04 JEEP GRAND CHEROKEE 4.0L

CH-0031

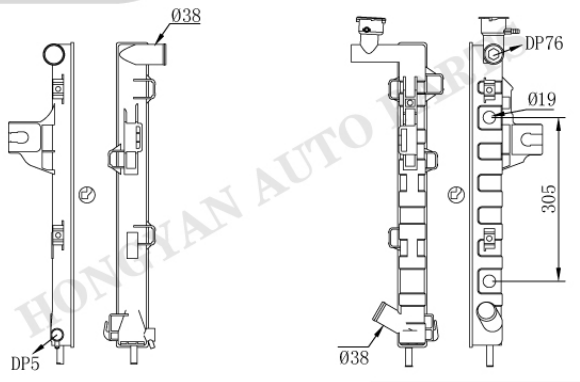

CH-0032AT/MT

Tank size :(R4.5×6.5×5×60×572)
OEM :52079425/AB/AC/AD/AE
DPI :2263
NISSENS :61010
APPLICATION :
99-00 JEEP GRAND CHEROKEE 4.7L

CH-0033

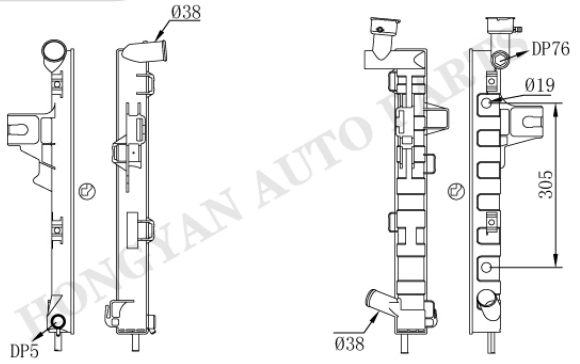

CH-0034AT/MT

Tank size :(R4.5×6.5×5×60×535)
OEM :5207983AB
DPI :2336
NISSENS :61023
APPLICATION :
01-04 JEEP GRAND CHEROKEE 4.7L

CHRYSLER/DODGE/JEEP

CH-0035

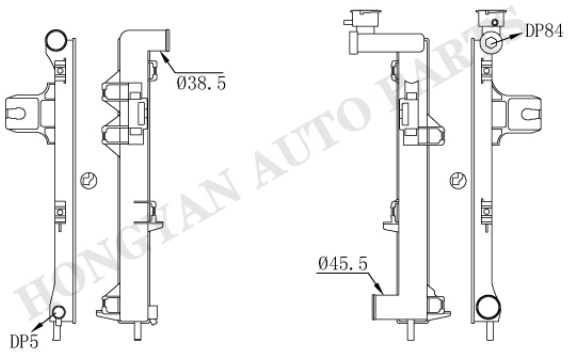

Tank size :(R5×6.5×5×60×535)
OEM :55116849AB/AC
DPI :2839 2840
NISSENS :
APPLICATION :
05-10 JEEP GRAND CHEROKEE 3.0/3.7/4.7/5.7L
06-10 JEEP COMMANDER 3.7/4.7/5.7L

CH-0036

CH-0037

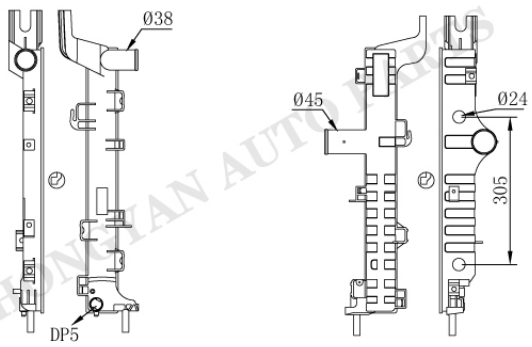

Tank size :(R4×6.5×5×60×498)
OEM :52028816AB/C/8AA/8AB/8AC
DPI :2294
NISSENS :69451
APPLICATION :
00-04 DODGE DAKOTA 2.5/3.9/4.7/5.9L
00-03 DODGE DURANGO 4.7/5.9L

CH-0038AT/MT

CH-0039AT/MT

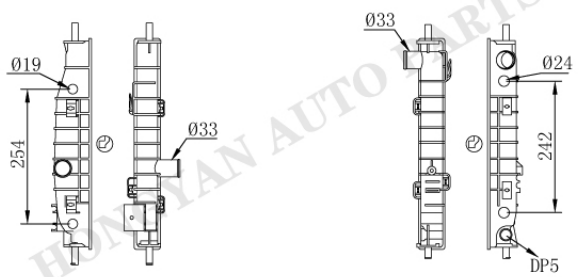

Tank size :(R5×5×5×49.5×396)
OEM :5010359/AA/AB 5093165AA
DPI :2183 2184
NISSENS :69016
APPLICATION :
98-04 CHRYSLER 300M 3.5L
98-04 CHRYSLER CONCORDE 2.7/3.2/3.5L
98-04 CHRYSLER INTREPID 2.7/3.2/3.5L
98-04 DODGE INTREPID 2.7/3.2/3.5L

CH-0040AT/MT

CH-0041

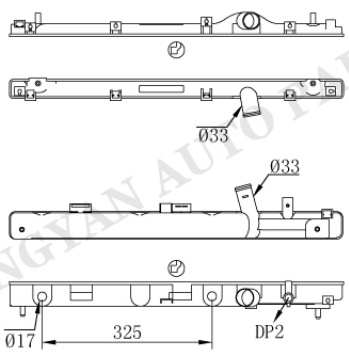

Tank size :(R9×5×5×39/49×627)
OEM :4740097 4495947
DPI :1548 1818
NISSENS :609941
APPLICATION :
95-99 DODGE NEON 1.8/2.0L

CH-0042AT/MT

HONGYAN AUTO PARTS

CHRYSLER/DODGE/JEEP

CH-0041

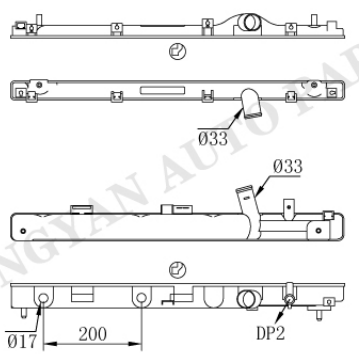

CH-0042-1AT

Tank size :(R9×5×5×39/49×627)
OEM :4740097 4495947
DPI :1548 1818
NISSENS :609941
APPLICATION :
95-99 DODGE NEON 1.8/2.0L

CH-0043

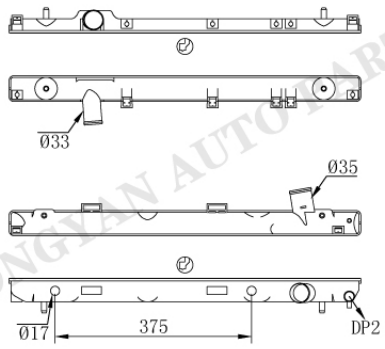

CH-0044AT/MT

Tank size :(R9×4×5×48×660)
OEM :5019214AA
DPI :2363
NISSENS :69210
APPLICATION :
00-03 DODGE NEON 1.6/2.0L

CH-0043

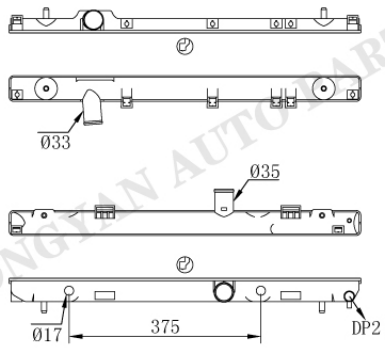

CH-0045AT/MT

Tank size :(R9×4×5×48×660)
OEM :5014580AA/1AA 5080574AA
DPI :2362 2794
NISSENS :69209
APPLICATION :
02-05 DODGE NEON 1.6/2.0L

CH-0046

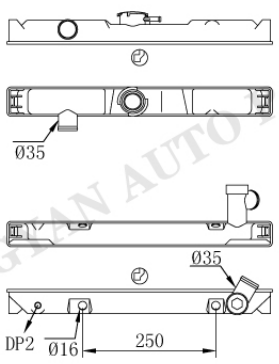

CH-0047AT/MT

Tank size :(R8×5×5×55/48×498)
OEM :MB007580/1 MB008171/2
DPI :700
NISSENS :
APPLICATION :
79-83 DODGE CHALLENGER 2.6L
79-82 DODGE D50 2.6L
83-93 DODGE RAM 2.0/2.4/2.6L

HONGYAN AUTO PARTS

CHRYSLER/DODGE/JEEP

CH-0048

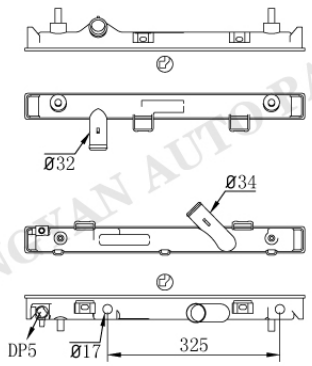

CH-0049AT/MT

Tank size :(R4.5×4×5×49.5×526)
OEM :05096190AA
DPI :2677 2679
NISSENS :
APPLICATION :
01-09 CHRYSLER PT CRUISER 2.4L

CH-0050

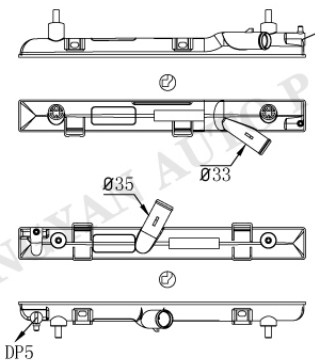

CH-0051

Tank size :(R5×4×5×60×539)
OEM :05073578AB
DPI :
NISSENS :61024
APPLICATION :
01-09 CHRYSLER PT CRUISER 2.2L(DIESEL)

CH-0052

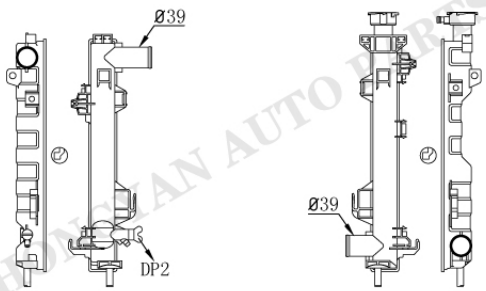

CH-0053

Tank size :(R4.5×5.5×5×52.5×437)
OEM :04677523AA
DPI :2795
NISSENS :
APPLICATION :
05-07 CHRYSLER TOWN&COUNTRY 3.3/3.8L
05-07 CHRYSLER VOYAGER 3.3L
05-07 DODGE GRAND CARAVAN 3.3/3.8L

CH-0052

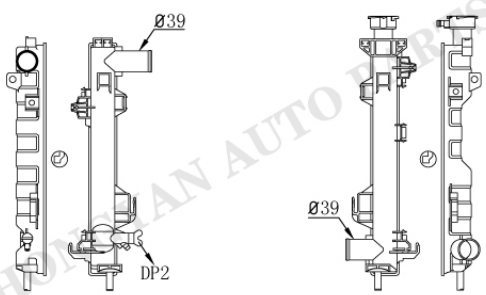

CH-0054

Tank size :(R4.5×5.5×5×52.5×437)
OEM :04677524AA
DPI :2770
NISSENS :
APPLICATION :
05-07 DODGE CARAVAN 2.4L

CH-8

CHRYSLER/DODGE/JEEP

CH-0055

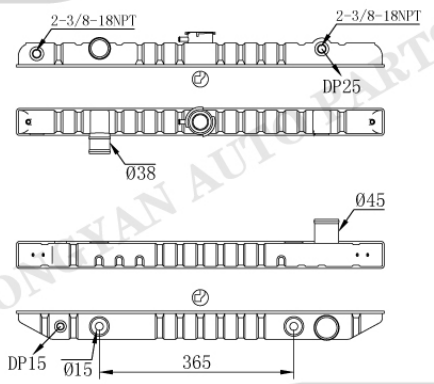

CH-0056AT/MT

Tank size :(R5.5×5×4.5×50.5×690)
OEM :52029630/AC 52029115/7
52029628/AC
DPI :1707 1717
NISSENS :69456
APPLICATION :
95-98 DODGE B1500/B2500 3.9/5.2/5.9L
00-03 DODGE RAM 3.9/5.2/5.9L

CH-0055

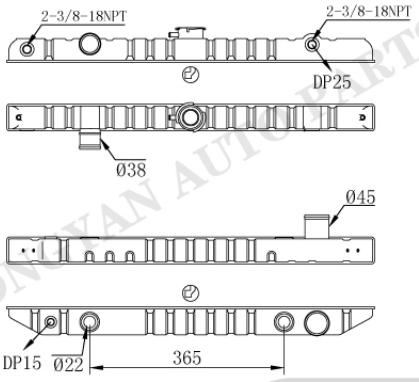

CH-0056-1AT

Tank size :(R5.5×5×4.5×50.5×690)
OEM :52029630/AC 52029115/7
52029628/AC
DPI :1707 1717
NISSENS :69456
APPLICATION :
95-98 DODGE B1500/B2500 3.9/5.2/5.9L
00-03 DODGE RAM 3.9/5.2/5.9L

CH-0057

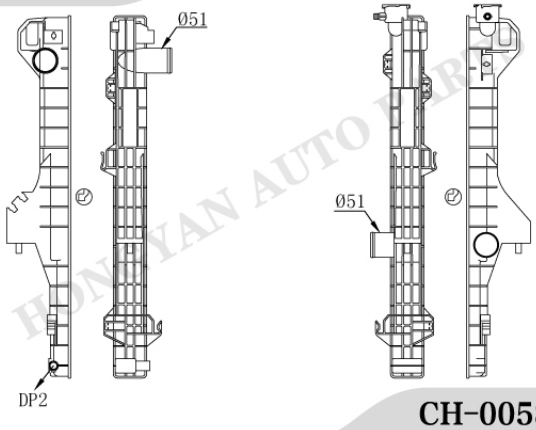

CH-0058

Tank size :(R4.5×5.5×5×70×751.5)
OEM :55056392AA 55037652
DPI :2711 2583
NISSENS :
APPLICATION :
04-09 DODGE RAM 5.9/6.7L

CH-0059

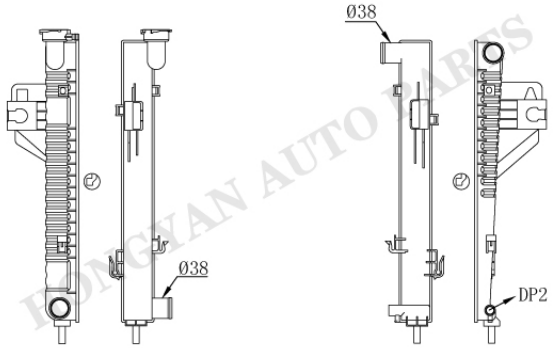

CH-0060

Tank size :(R12×4.5×5×61×530)
OEM :52080123AA/AC
DPI :2482
NISSENS :
APPLICATION :
02-05 JEEP LIBERTY 2.4L

CHRYSLER/DODGE/JEEP

CH-0061

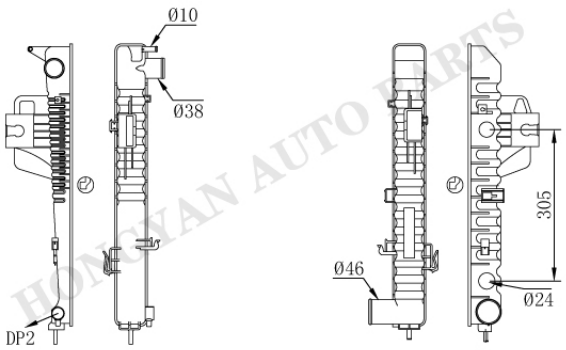

CH-0062AT/MT

Tank size :(R13×4.5×5×61×530)
OEM :52080118AB
DPI :2481
NISSENS :61017
APPLICATION :
02-06 JEEP LIBERTY 3.7L

CH-0063

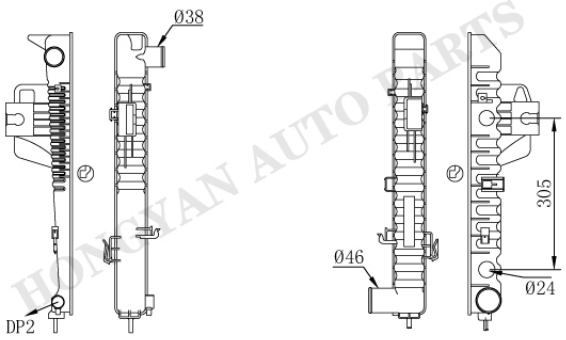

CH-0062AT/MT

Tank size :(R13×4.5×5×61×530)
OEM :
DPI :
NISSENS :
APPLICATION :
02-06 JEEP LIBERTY 3.7L

CH-0063

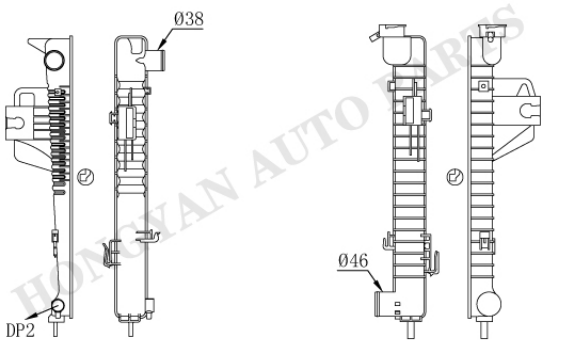

CH-0064

Tank size :(R13×4.5×5×61×530)
OEM :68020278AA
DPI :2975
NISSENS :
APPLICATION :
07- JEEP LIBERTY 3.7L

CH-0065

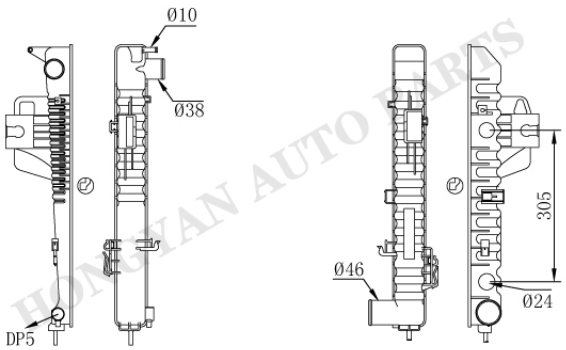

CH-0066AT/MT

Tank size :(R13×4.5×5×61×530)
OEM :
DPI :
NISSENS :
APPLICATION :
02-06 JEEP LIBERTY 3.7L

HONGYAN AUTO PARTS

CHRYSLER/DODGE/JEEP

CH-0067

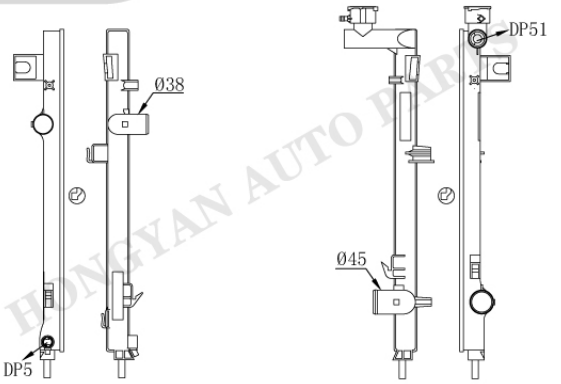

CH-0068

Tank size :(R5×4×6.5×43×605)
OEM :68033227AA
DPI :13071
NISSENS :61035
APPLICATION :
08-13 JEEP LIBERTY 3.7L

CH-0069

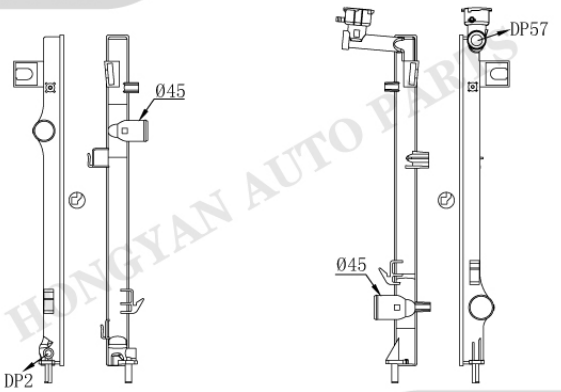

CH-0070

Tank size :(R5×4.2×6.8×42.5×621)
OEM :68003973AB
DPI :2971
NISSENS :
APPLICATION :
07-11 DODGE NITRO 3.7/4.0L

CH-0071

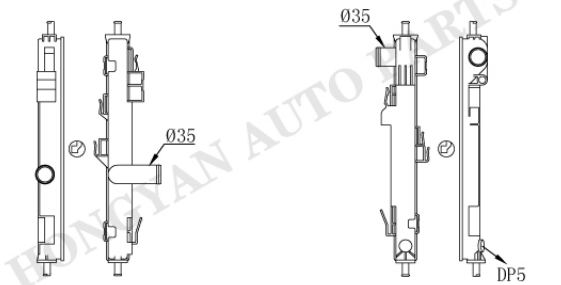

CH-0072

Tank size :(R5×4×5×43×420)
OEM :5159249AA
DPI :2951
NISSENS :61019
APPLICATION :
11-14 CHRYSLER 200 2.4/3.6L
07-10 CHRYSLER CIRRUS 2.4/3.5L
07-10 CHRYSLER SEBRING 2.4/3.5L
11-12 DODGE AVENGER 2.4/3.6L

CH-0073

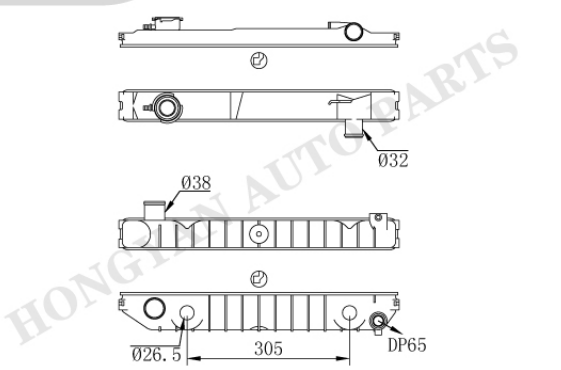

CH-0074AT/MT

Tank size :(R16×5×5×58.5×521)
OEM :52028120 52006124/6
52021120AB 52028112/4/AB
DPI :2101
NISSENS :60993
APPLICATION :
97-04 JEEP TJ 4.0L
97-06 JEEP WRANGLER 2.4/2.5/4.0L

HONGYAN AUTO PARTS

CHRYSLER/DODGE/JEEP

CH-0075

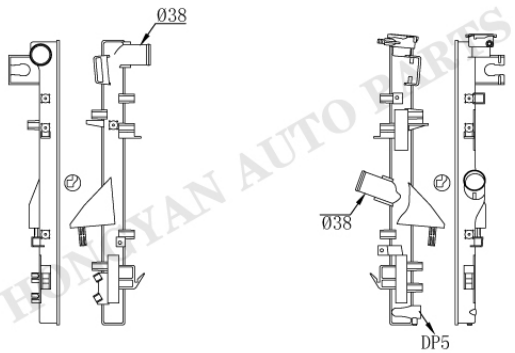

CH-0076

Tank size :(R4.5×4×5×42.5×534.5)
OEM :55056633AB
DPI :2957
NISSENS :
APPLICATION :
07-14 JEEP WRANGLER 3.6/3.8L

CH-0077

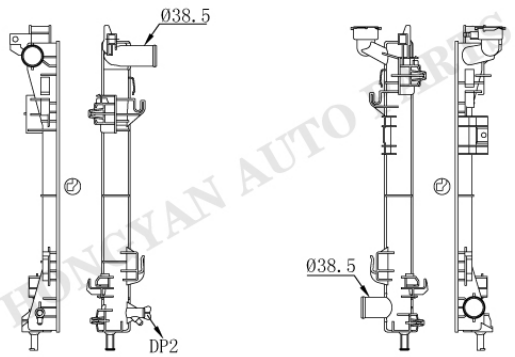

CH-0078

Tank size :(R5.5×4×5.5×52.8×546.3)
OEM :4677751AA 4677755AA
DPI :13063
NISSENS :
APPLICATION :
08-14 CHRYSLER TOWN&COUNTRY 3.6/4.0L
08-14 DODGE GRAND CARAVAN 3.3/3.6L

CH-0079

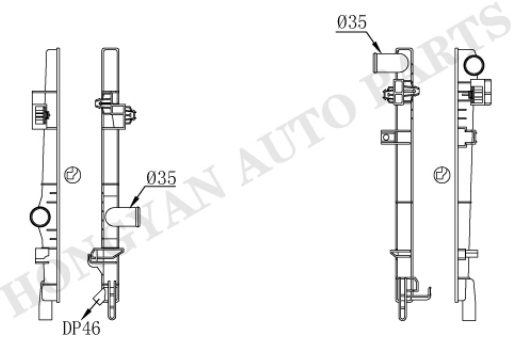

CH-0080

Tank size :(R5×4×5.5×32×477)
OEM :68038238AA
DPI :13084
NISSENS :61027
APPLICATION :
09-14 DODGE JOURNEY 2.4/3.6L

CH-0081

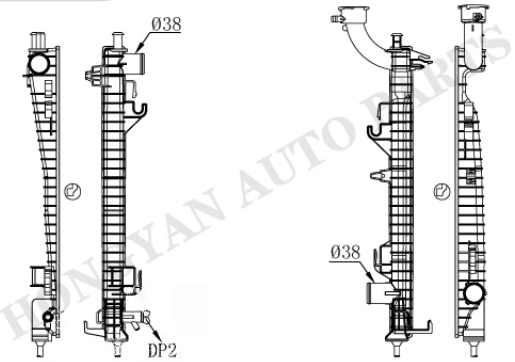

CH-0082

Tank size :(R5.5×4×5.5×41.8×546.5)
OEM :55038001AG
DPI :13200
NISSENS :61033
APPLICATION :
11-14 DODGE DURANGO 3.6/5.7L
11-14 JEEP GRAND CHEROKEE 3.6/5.7/6.4L

CH-12

CHRYSLER/DODGE/JEEP

CH-0083

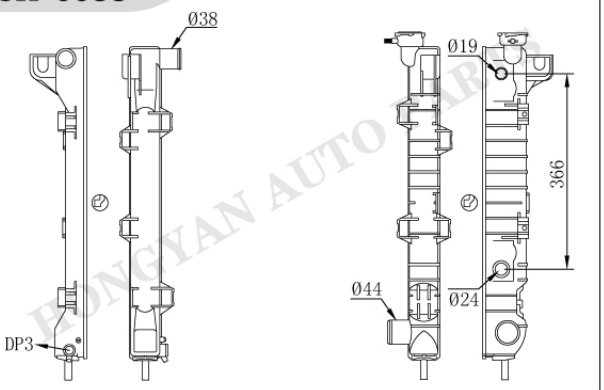

CH-0084AT/MT

Tank size :(R4×6.5×5×60×585.7)
OEM :52028816AB/AD
DPI :1905 2186
NISSENS :60998
APPLICATION :
97-00 DODGE DURANGO 3.9/5.2/5.9L

CH-0083

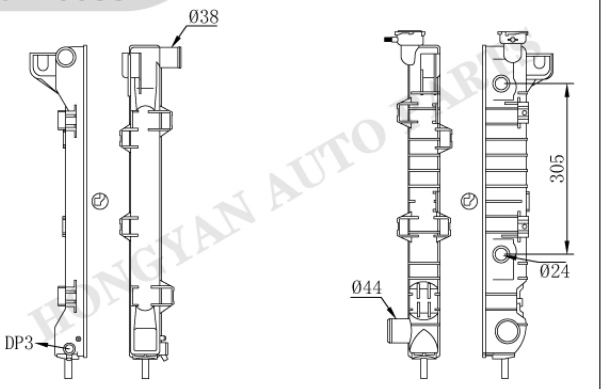

CH-0084-1AT

Tank size :(R4×6.5×5×60×585.7)
OEM :52028816AB/AD
DPI :
NISSENS :
APPLICATION :
97-00 DODGE DURANGO 3.9/5.2/5.9L

CH-0085

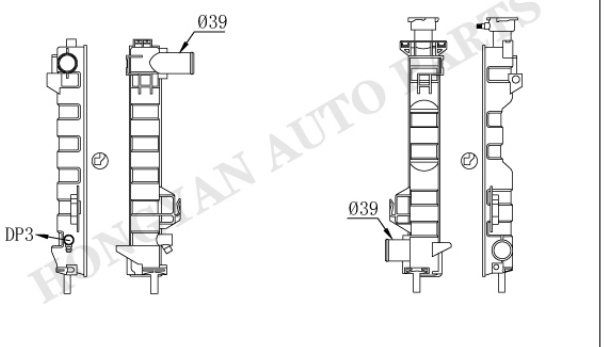

CH-0086

Tank size :(R4×6.5×4.5×60×434)
OEM :4809168/219/225/226
DPI :2311
NISSENS :61005
APPLICATION :
01-04 CHRYSLER TOWN&COUNTRY 3.3/3.8L
01-04 CHRYSLER VOYAGER 3.3L
01-03 DODGE CARAVAN 3.3L

CH-0085

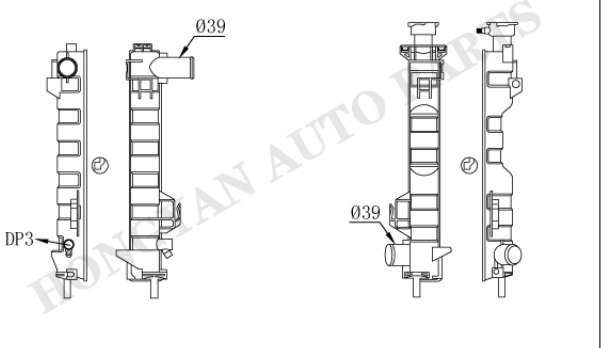

CH-0087

Tank size :(R4×6.5×4.5×60×434)
OEM :4809238/238AC 4880237
DPI :2312
NISSENS :61004
APPLICATION :
01-02 CHRYSLER VOYAGER 2.4L
01-04 DODGE CARAVAN 2.4L

CHRYSLER/DODGE/JEEP

CH-0088

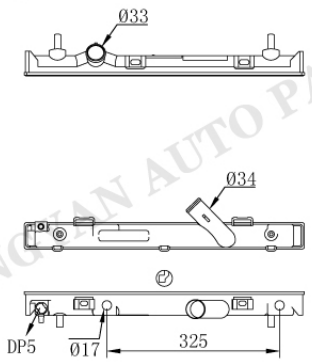

Tank size :(R4.5×4×5×49.5×526)
OEM :5017404AB 5086547AA
DPI :2298
NISSENS :61002A
APPLICATION :
01-09 CHRYSLER PT CRUISER 2.4L

CH-0049AT/MT

CH-0089

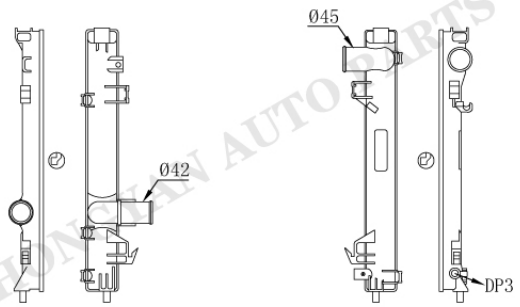

Tank size :(R5×4.2×7×60.5×490.5)
OEM :
DPI :
NISSENS :
APPLICATION :
05-08 CHRYSLER 300 2.7/3.5/5.7/6.1L
06-08 DODGE CHARGER 2.7/3.5/5.7/6.1L
05-08 DODGE MAGNUM 2.7/3.5/5.7/6.1L

CH-0090

CH-0091

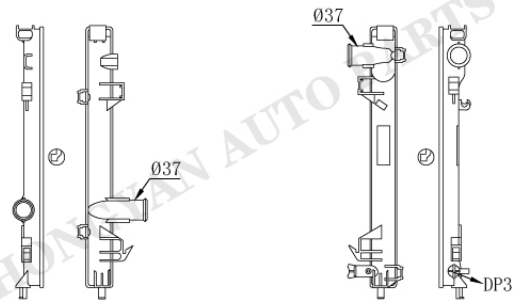

Tank size :(R5×4.5×5×49.5×489)
OEM :05137692AA
DPI :
NISSENS :
APPLICATION :
05-08 CHRYSLER 300 2.7/3.5/5.7/6.1L
06-08 DODGE CHARGER 2.7/3.5/5.7/6.1L
05-08 DODGE MAGNUM 2.7/3.5/5.7/6.1L

CH-0092

CH-0093

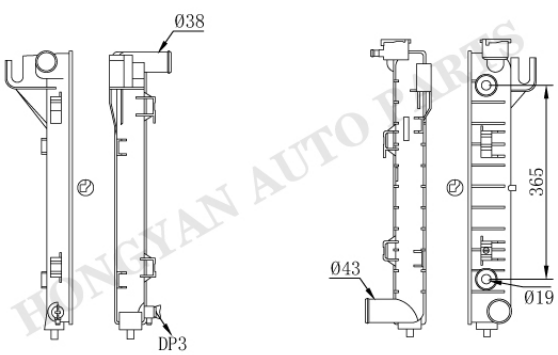

Tank size :(R6×6×5.5×60×513)
OEM :52006491/AC 52028057/AB
52028057AE 52029189AB
DPI :1552
NISSENS :
APPLICATION :
94-01 DODGE RAM 1500 3.9/5.2L

CH-0094AT/MT

CH-14

HONGYAN AUTO PARTS

CHRYSLER/DODGE/JEEP

CH-0095

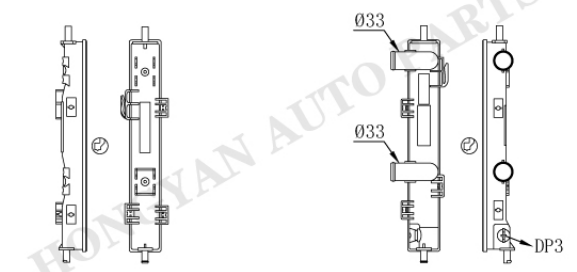

CH-0096

Tank size :(R5×4.2×6.5×60×396.5)
OEM :4596399AA 4773642 5017619AA
5017620AA/B MR373102/3/4
DPI :2323
NISSENS :
APPLICATION :
01-06 CHRYSLER SEBRING 2.4/2.7L

CH-0097AT/MT

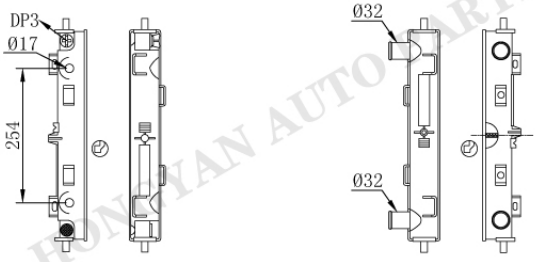

CH-0098

Tank size :(R5×5×5×59×396)
OEM :4596399AA 4596400AA/1AA
4741108/10 4773642
DPI :1702
NISSENS :60981A
APPLICATION :
95-00 CHRYSLER CIRRUS 2.0/2.4/2.5L
96-00 CHRYSLER SEBRING 2.4/2.5L
95-00 DODGE STRATUS 2.0/2.4L

CH-0099AT/MT

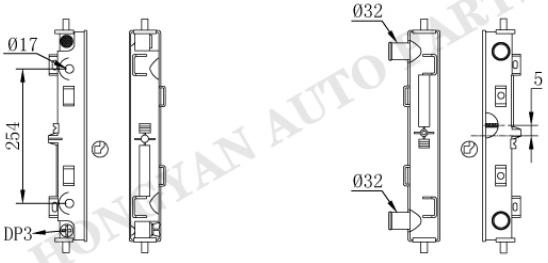

CH-0100

Tank size :(R5×5×5×59×396)
OEM :
DPI :
NISSENS :
APPLICATION :
95-00 CHRYSLER CIRRUS 2.0/2.4/2.5L
96-00 CHRYSLER SEBRING 2.4/2.5L
95-00 DODGE STRATUS 2.0/2.4L

CH-0101AT/MT

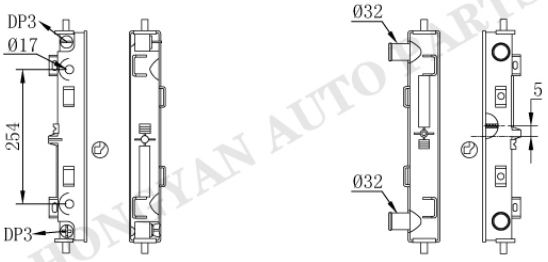

CH-0100

Tank size :(R5×5×5×59×396)
OEM :
DPI :
NISSENS :
APPLICATION :
95-00 CHRYSLER CIRRUS 2.0/2.4/2.5L
96-00 CHRYSLER SEBRING 2.4/2.5L
95-00 DODGE STRATUS 2.0/2.4L

HONGYAN AUTO PARTS

CHRYSLER/DODGE/JEEP

CH-0102

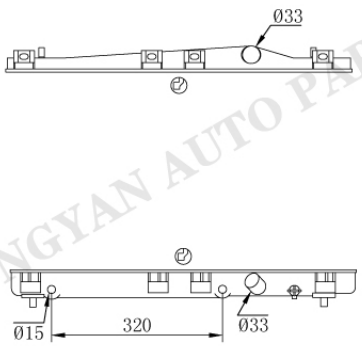

Tank size :(R9×4.5×5×48×650)
OEM :4546900 4546902
DPI :2196
NISSENS :
APPLICATION :
95-99 DODGE NEON 2.0L

CH-0103AT/MT

CH-0104AT/MT

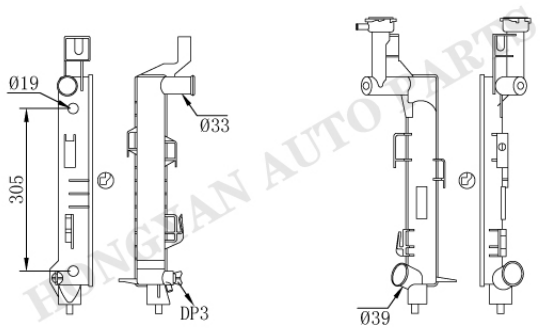

Tank size :(R7.5×4×6×59.5×396.5)
OEM :4644266 4778044 5191926AA
DPI :1388
NISSENS :
APPLICATION :
93-95 CHRYSLER TOWN&COUNTRY 3.8L
93-95 DODGE CARAVAN 2.5/3.3L
93-95 DODGE GRAND CARAVAN 3.3/3.8L

CH-0105

CH-0106AT/MT

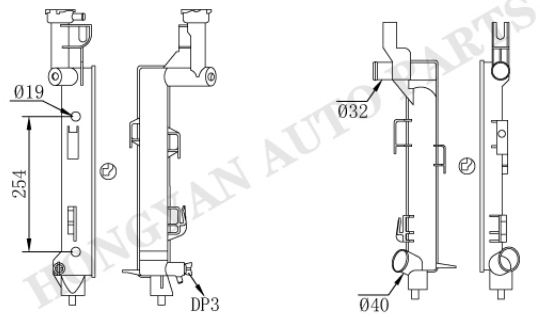

Tank size :(R7.5×4×6×59.5×396.5)
OEM :4546460/1/2/3 4644362/3/AB
DPI :1400
NISSENS :
APPLICATION :
93-95 CHRYSLER TOWN&COUNTRY 3.8L
93-95 DODGE CARAVAN 2.5/3.3L
93-95 DODGE GRAND CARAVAN 3.3/3.8L

CH-0107

CH-0106AT/MT

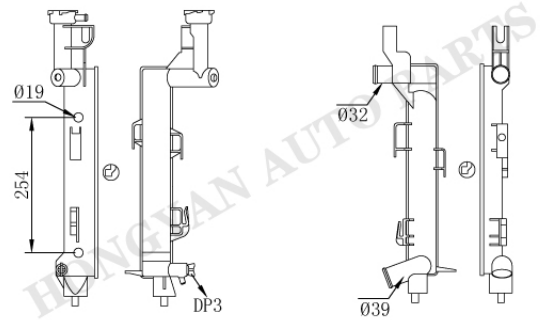

Tank size :(R7.5×4×6×59.5×396.5)
OEM :4644364/AB 4682168/9
DPI :1391
NISSENS :
APPLICATION :
93-95 DODGE CARAVAN 3.0L
93-95 DODGE GRAND CARAVAN 3.0L

CH-0108

HONGYAN AUTO PARTS

CHRYSLER/DODGE/JEEP

CH-0109

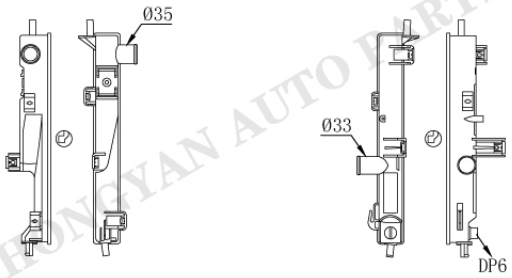

CH-0110

Tank size :(R5.5×6.4×5×50×396)
OEM :
DPI :
NISSENS :
APPLICATION :
02-03 CHRYSLER STRATUS

CH-0111

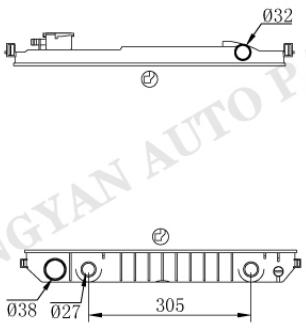

CH-0112AT/MT

Tank size :(R4.5×6×5×60×510)
OEM :52004781 5200612/3/4/5/6
52007227/8 52028112/AB
DPI :1015 1507 1682
NISSENS :
APPLICATION :
87-95 JEEP WRANGLER 2.5/4.0/4.2L

CH-0113

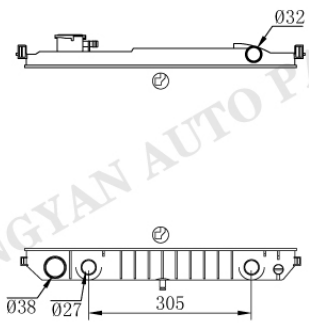

CH-0114AT/MT

Tank size :(R4.5×6×5×60×510)
OEM :52003254/5 52003270/370
52003544/5 52003551
52004786
DPI :871
NISSENS :
APPLICATION :
84-87 JEEP WRANGLER 2.5/2.8L
84-93 JEEP CHEROKEE 2.5/2.8L

CH-0113

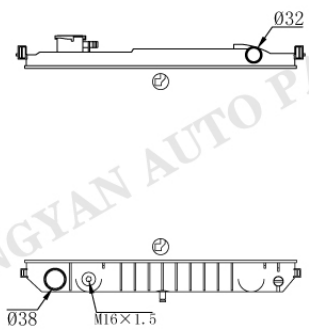

CH-0115

Tank size :(R4.5×6×5×60×510)
OEM :
DPI :77
NISSENS :
APPLICATION :
84-87 JEEP WRANGLER 2.5/2.8L
84-93 JEEP CHEROKEE 2.5/2.8L

HONGYAN AUTO PARTS

CHRYSLER/DODGE/JEEP

CH-0116

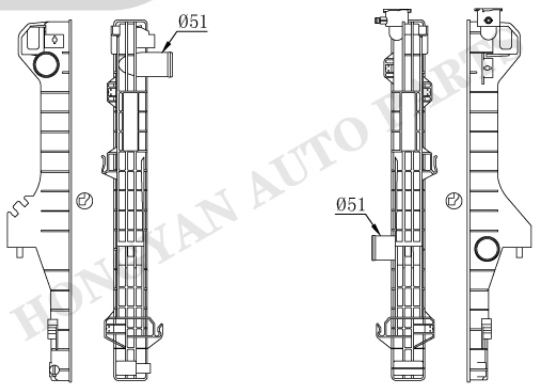

CH-0117

Tank size :(R4.5×6×4.5×70×766.5)
OEM :
DPI :
NISSENS :
APPLICATION :
04-09 DODGE RAM 5.9/6.7L

CH-0118

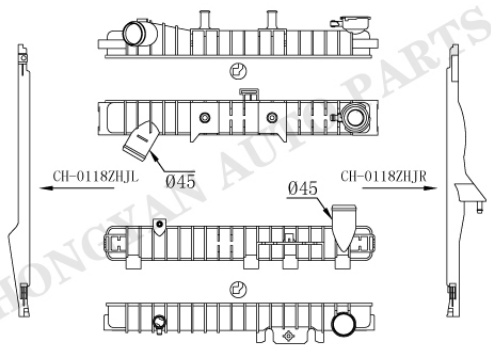

CH-0119

Tank size :(R13.5×6×5.3×64×498.5)
OEM :52029044A/C 52029044AD
DPI :2738 2739
NISSENS :
APPLICATION :
07-09 CHRYSLER ASPEN 4.7/5.7L
04-09 DODGE DURANGO 4.7/5.7L

CH-0120

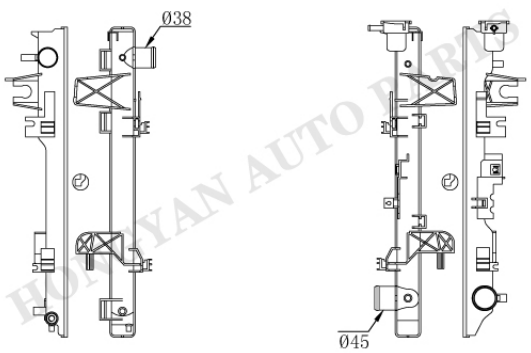

CH-0121

Tank size :(R9×4.2×5.2×47.8×582.3)
OEM :55056858AB 55056870AA
DPI :13129 13295
NISSENS :
APPLICATION :
11-14 RAM 1500 3.6/4.7/5.7L

CH-0122

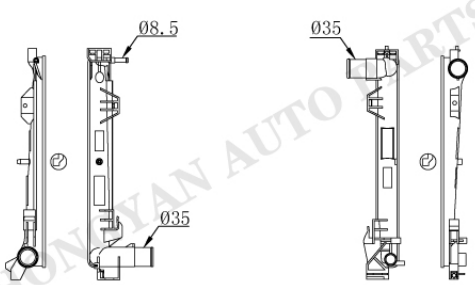

CH-0123

Tank size :(R11.5×4×5×42.5×396.5)
OEM :5142488AA
DPI :
NISSENS :61018A
APPLICATION :
01- CHRYSLER TOWN&COUNTRY 2.8L(DIESEL)
01- CHRYSLER VOYAGER 2.8L(DIESEL)

HONGYAN AUTO PARTS

CHRYSLER/DODGE/JEEP

CH-0124

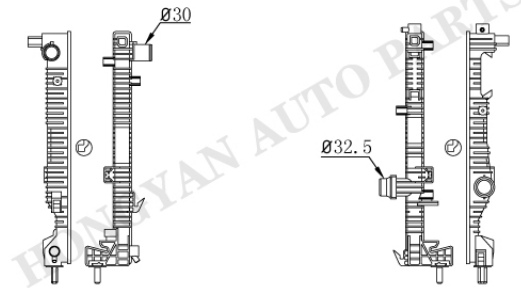

CH-0125

Tank size :(R4.5×4×5.8×34×435.5)
OEM :55111483AC
DPI :13323
NISSENS :
APPLICATION :
13-14 DODGE DART 1.4/2.0/2.4L

CH-0126



CH-0127

Tank size :(R×××60×341)
OEM :4798013
DPI :
NISSENS :60985
APPLICATION :
95-00 CHRYSLER VOYAGER 2.5L(DIESEL)

CH-0128

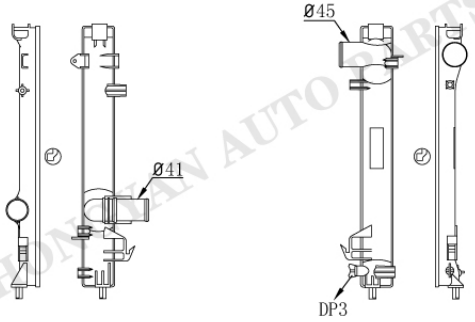

CH-0129

Tank size :(R5×4.2×6.5×60.3×490.2)
OEM :68050131AA
DPI :13158
NISSENS :
APPLICATION :
09-14 CHRYSLER 300 2.7/3.5/5.7
09-13 DODGE CHARGE 5.7L

CH-0130

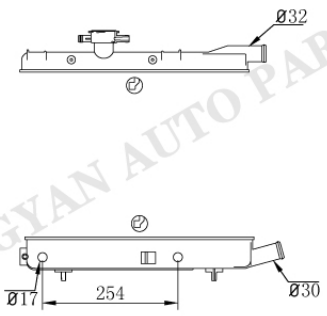

CH-0131AT/MT

Tank size :(R9×5.8×5×64×430)
OEM :431264 4401803/4/7/8
4546207 4546405/6/7
DPI :1125 1271 1505
NISSENS :
APPLICATION :
90-92 CHRYSLER TOWN&COUNTRY 3.3L
90-92 DODGE CARAVAN 2.5/3.0L

HONGYAN AUTO PARTS

CHRYSLER/DODGE/JEEP

CH-0132

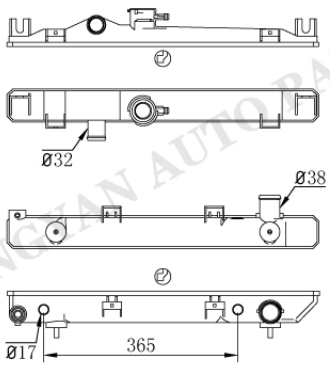

CH-0133AT/MT

Tank size :(R×6.3×8×62×586)
OEM :4266892 4266893 4401070
DPI :981 1194
NISSENS :
APPLICATION :
87-99 DODGE DAKOTA 2.5L

CH-0134

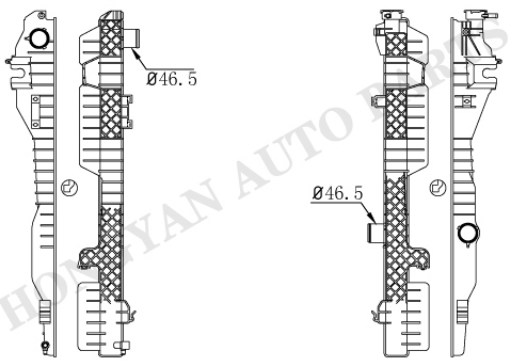

CH-0135

Tank size :(R9.5×5.2×5.5×63.5×846.5)
OEM :55057089AB
DPI :13296
NISSENS :
APPLICATION :
11-12 RAM 2500/3500

CH-0136

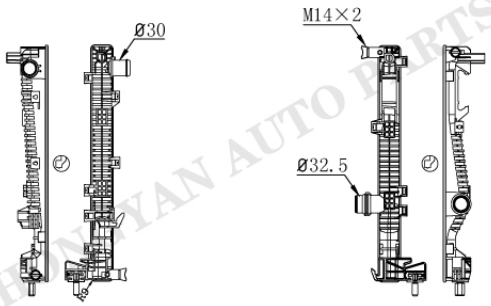

CH-0137

Tank size :(R9×4×4.5×44×444.5)
OEM :68229284AA
DPI :13400 13401
NISSENS :
APPLICATION :
14-15 JEEP CHEROKEE 2.4/3.2L

CH-0138AT/MT



CH-0139

Tank size :(R13×5×7×55×394.5)
OEM :
DPI :1109
NISSENS :69002
APPLICATION :
90-93 CHRYSLER DYNASTY 2.5/3L
91-93 CHRYSLER NEW YORKER 3.3/3.8L

HONGYAN AUTO PARTS

CHRYSLER/DODGE/JEEP

CH-0140

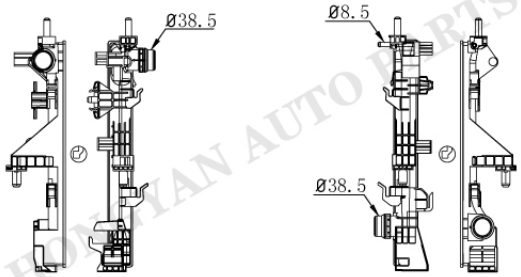

CH-0141

Tank size :(R5.5×4.5×5×48×426.5)
OEM :68188992AA
DPI :13448
NISSENS :
APPLICATION :
14-15 RAM PROMASTER 1500/2500/3500

CH-0142

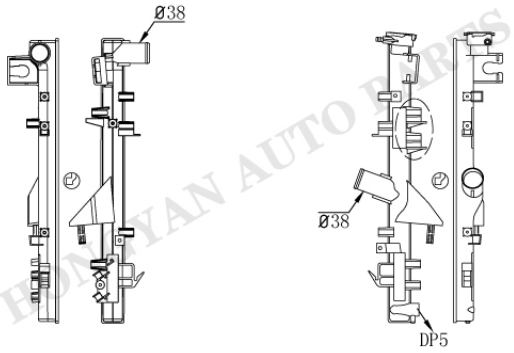

CH-0143

Tank size :(R4.5×4×5×42.5×534.5)
OEM :55056633AB
DPI :
NISSENS :
APPLICATION :
07-14 JEEP WRANGLER 3.6/3.8L

CH-0144

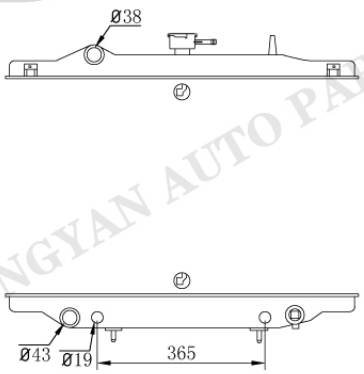

CH-0145AT/MT

Tank size :(R9×4.6×5.5×63×664)
OEM :
DPI :1709
NISSENS :
APPLICATION :
92-96 DODGE DAKOTA 3.9/5.2L

CH-0146AT/MT



CH-0147

Tank size :(R13X5X7X55.3X394.5)
OEM :
DPI :1108
NISSENS :60983
APPLICATION :
91-93 CHRYSLER DAYTONA 2.2/2.5/3.0L

HONGYAN AUTO PARTS

CHRYSLER/DODGE/JEEP

CH-0104AT/MT

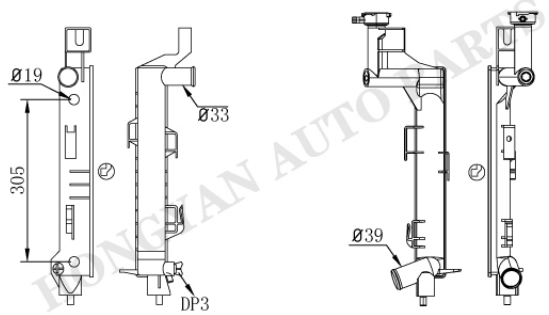

CH-0148

Tank size :(R7.5×4×6×60×397)
OEM :4644045 4778045
DPI :1392
NISSENS :
APPLICATION :
93-95 DODGE CARAVAN 3.0L

CH-0035

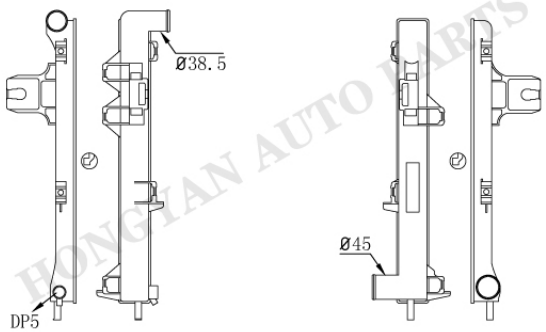

CH-0149

Tank size :(R5×6.5×5×60×535)
OEM :55116858AA
DPI :13181
NISSENS :61022
APPLICATION :
07-10 JEEP GRAND

CH-0150

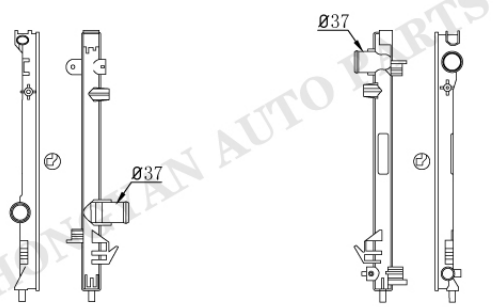

CH-0151

Tank size :(R4.5×4.2×5.2×42.8×485)
OEM :
DPI :13157 2766
NISSENS :
APPLICATION :
09-16 CHRYSLER 300 2.7/3.5/3.6L
14-16 DODGE CHALLENGER 3.6/5.7/6.4L

CH-0152

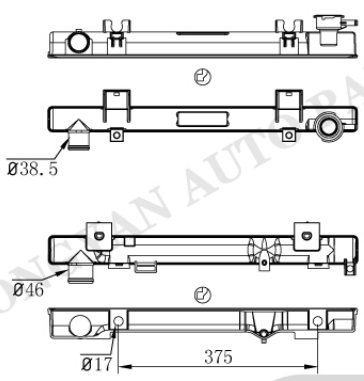

CH-0153AT/MT

Tank size :(R8.5×4×4.6×48/54.5×582)
OEM :
DPI :
NISSENS :
APPLICATION :

CH-22

CHRYSLER/DODGE/JEEP

CH-0154



CH-0155

Tank size :(R5×5×5.8×84×511.5)
OEM :
DPI :1553
NISSENS :
APPLICATION :
94-02 DODGE RAM 2500/3500 5.9L

CH-0154



CH-0156AT/MT

Tank size :(R5×5×5.8×84×511.5)
OEM :
DPI :1554 1555
NISSENS :
APPLICATION :
94-02 DODGE RAM 2500/3500 8.0L

CH-0157

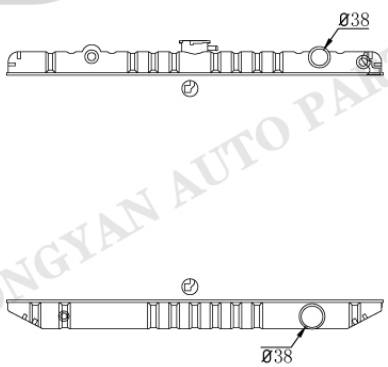

CH-0158

Tank size :(R5×4.2×5×50×690)
OEM :
DPI :
NISSENS :
APPLICATION :

CH-0159

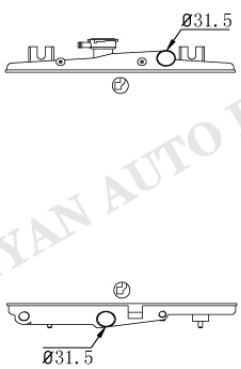

CH-0160

Tank size :(54.8×431.5)
OEM :
DPI :881
NISSENS :
APPLICATION :
84-89 DODGE CARAVAN 2.2/2.5L

HONGYAN AUTO PARTS

CHRYSLER/DODGE/JEEP

CH-0161AT/MT



CH-0162

Tank size :(57×404.8)
OEM :
DPI :883
NISSENS :
APPLICATION :
84-89 CHRYSLER DAYTONA 2.2/2.5L
83-89 CHRYSLER LEBARON 2.2L

CH-0163AT/MT



CH-0164

Tank size :(53.7×384)
OEM :
DPI :980
NISSENS :
APPLICATION :
89-90 CHRYSLER SHADOW 2.2/2.5L
87-89 DODGE SHADOW 2.2L
87-90 PLYMOUTH SUNDANCE 2.2/2.5L

CH-0163-1AT



CH-0164

Tank size :(53.7×384)
OEM :
DPI :
NISSENS :
APPLICATION :
89-90 CHRYSLER SHADOW 2.2/2.5L
87-89 DODGE SHADOW 2.2L
87-90 PLYMOUTH SUNDANCE 2.2/2.5L

CH-0165



Tank size :(53.5X384)
OEM :
DPI :
NISSENS :
APPLICATION :

HONGYAN AUTO PARTS

CHRYSLER/DODGE/JEEP

CH-0167AT/MT

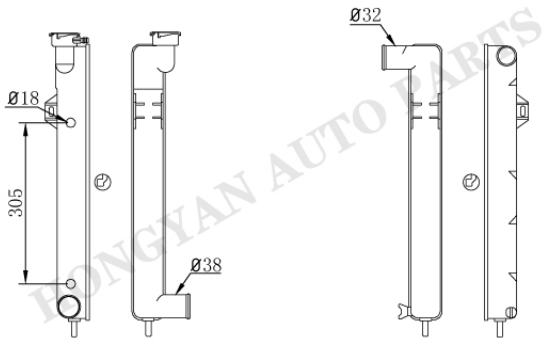

CH-0168

Tank size :(R13.5×6×6×58×519)
OEM :
DPI :2231 2232
NISSENS :
APPLICATION :
1993-98 JEEP GRAND CHEROKEE

CH-0169

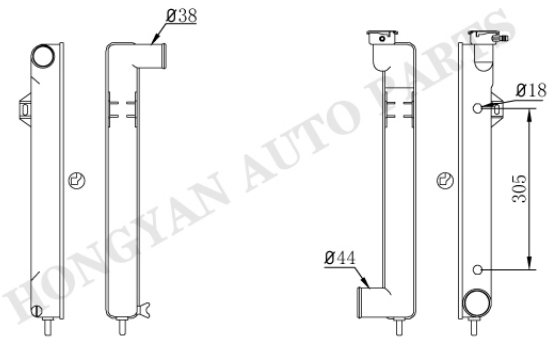

CH-0170AT/MT

Tank size :(R13.5×6×6×58×519)
OEM :
DPI :2230
NISSENS :
APPLICATION :
93-97 JEEP GRAND CHEROKEE 5.2L

CH-0171

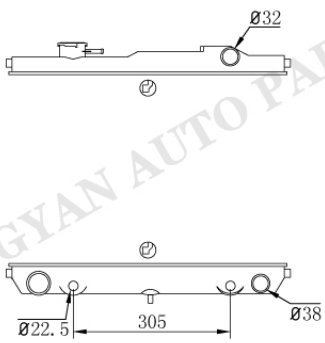

CH-0172AT/MT

Tank size :(R11×5×5.4×58×520.3)
OEM :
DPI :77 871
NISSENS :
APPLICATION :
84-93 JEEP CHEROKEE 2.1/2.5/2.8L

CH-0173

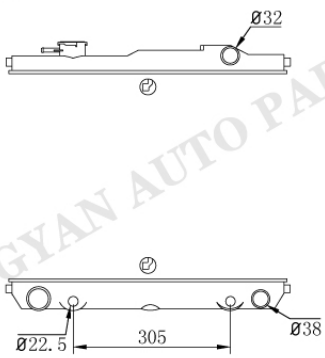

CH-0174AT/MT

Tank size :(R11×5×5.4×58×520.3)
OEM :
DPI :1015
NISSENS :
APPLICATION :
87-95 JEEP WRANGLER 2.5/4.0/4.2L

HONGYAN AUTO PARTS

CHRYSLER/DODGE/JEEP

CH-0175



CH-0176

Tank size :(R9×5.5×7.2×37.8×384.8)
OEM :
DPI :1077
NISSENS :
APPLICATION :
88-90 CHRYSLER DYNASTY 2.5/3.0/3.3L
88-90 CHRYSLER NEW YORKER 2.5/3.0/3.3L

CH-0130

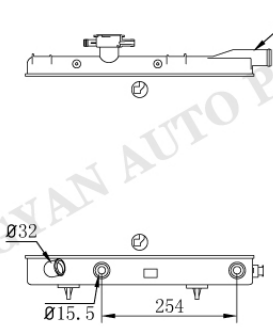

CH-0177AT/MT

Tank size :(R9×6×7×64.5×430)
OEM :
DPI :1387
NISSENS :
APPLICATION :
90-92 PLYMOUTH GRAND 3.0L
91-92 PLYMOUTH VOYAGER 3.0L
90-92 DODGE CARAVAN 2.5/3.0L

CH-0178

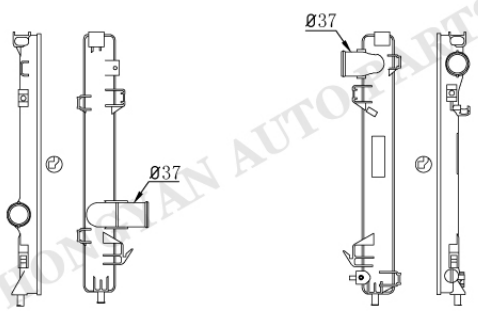

CH-0179

Tank size :(R5×4.5×5.2×50×490)
OEM :
DPI :2766 2767
NISSENS :
APPLICATION :
05-08 CHRYSLER 300 2.7/3.5/5.7/6.1L
05-08 DODGE CHARGE 2.7/3.5/5.7/6.1L
05-08 DODGE MAGNUM 2.7/3.5/5.7/6.1L

Tank size :
OEM :
DPI :
NISSENS :
APPLICATION :

HONGYAN AUTO PARTS

CH-26

CHRYSLER/DODGE/JEEP

	Tank size : OEM : DPI : NISSENS : APPLICATION :
	Tank size : OEM : DPI : NISSENS : APPLICATION :
	Tank size : OEM : DPI : NISSENS : APPLICATION :
	Tank size : OEM : DPI : NISSENS : APPLICATION :

HONGYAN AUTO PARTS

CHRYSLER/DODGE/JEEP

	Tank size : OEM : DPI : NISSENS : APPLICATION :
	Tank size : OEM : DPI : NISSENS : APPLICATION :
	Tank size : OEM : DPI : NISSENS : APPLICATION :
	Tank size : OEM : DPI : NISSENS : APPLICATION :

HONGYAN AUTO PARTS

CHRYSLER/DODGE/JEEP

	Tank size : OEM : DPI : NISSENS : APPLICATION :
	Tank size : OEM : DPI : NISSENS : APPLICATION :
	Tank size : OEM : DPI : NISSENS : APPLICATION :
	Tank size : OEM : DPI : NISSENS : APPLICATION :

HONGYAN AUTO PARTS

CHERY

CHE-0001

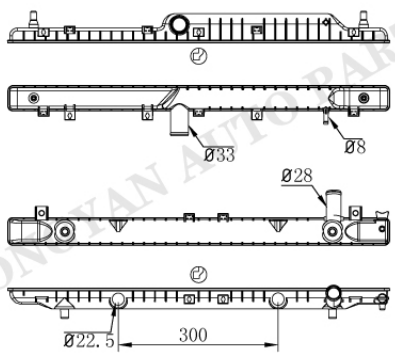

CHE-0002AT/MT

Tank size :(R10×5×5×46.5/51×717)
OEM :
DPI :
NISSENS :
APPLICATION :
CHERY A5

CHE-0003

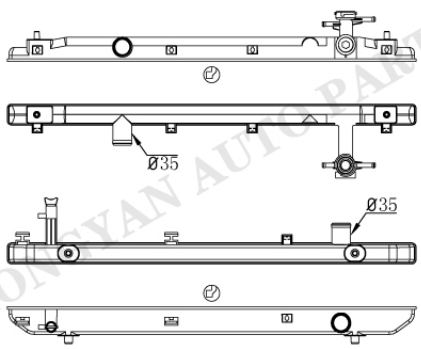

CHE-0004

Tank size :(R8×4.3×5×38.5×766.5)
OEM :
DPI :
NISSENS :
APPLICATION :
CHERY TIGGO

CHE-0005

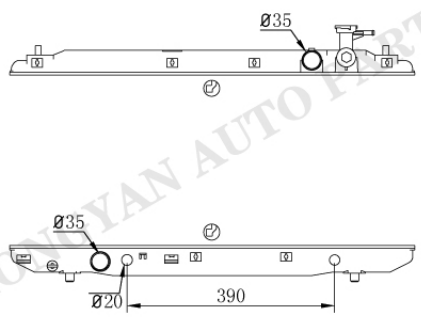

CHE-0006AT/MT

Tank size :(R10×4.8×5×39.5×760)
OEM :
DPI :
NISSENS :
APPLICATION :
CHERY TIGGO

CHE-0007



CHE-0008

Tank size :(R8×4.5×5×53×370)
OEM :
DPI :
NISSENS :
APPLICATION :
CHERY COWIN

HONGYAN AUTO PARTS

CHE-1

CHE-0009



CHE-0010

Tank size :(R6×4.5×5.5×47×322)
OEM :
DPI :
NISSENS :
APPLICATION :
CHERY FUTWIN

CHE-0011



CHE-0010

Tank size :(R6×4.5×5.5×47×322)
OEM :
DPI :
NISSENS :
APPLICATION :
CHERY FUTWIN

CHE-0012

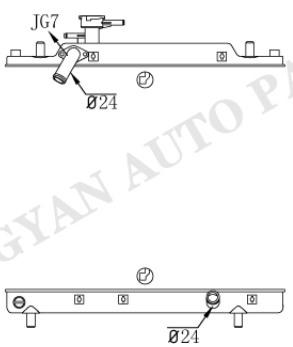

CHE-0013

Tank size :(R9×4.8×5.7×40×525)
OEM :
DPI :
NISSENS :
APPLICATION :
CHERY QR03

CHE-0014

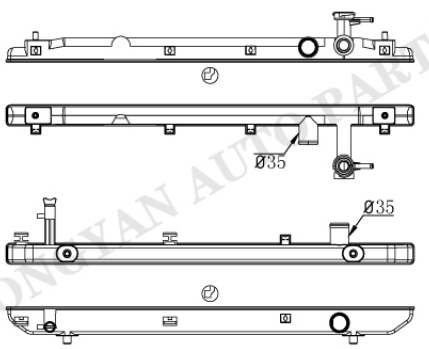

CHE-0004

Tank size :(R8×4.2×5×38.5×766.5)
OEM :
DPI :
NISSENS :
APPLICATION :
CHETY TIGGO

HONGYAN AUTO PARTS

CHERY

CHE-0015

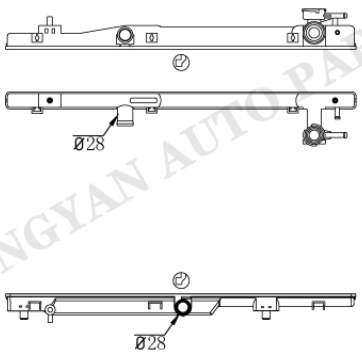

CHE-0016

Tank size : (R8.5×4.5×5.5×32.5/39.2×658.5)
OEM :
DPI :
NISSENS :
APPLICATION :
CHERY

CHE-0017

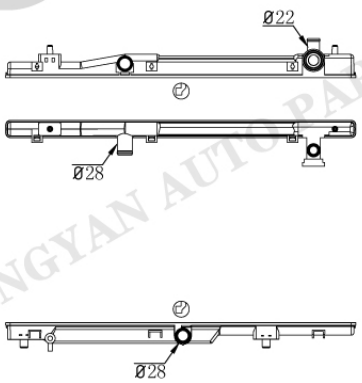

CHE-0016

Tank size : (R8.5×4.5×5.5×32.5/39.2×658.5)
OEM :
DPI :
NISSENS :
APPLICATION :
CHERY

CHE-0018

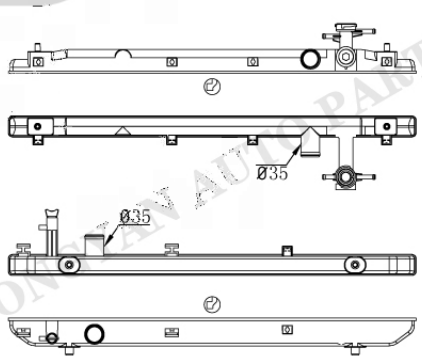

CHE-0019

Tank size :(R8×4.5×5×38.5×767)
OEM :
DPI :
NISSENS :
APPLICATION :
CHETY TIGGO

CHE-0020



CHE-0021

Tank size :(R10×4.5×5×43.5×318)
OEM :
DPI :
NISSENS :
APPLICATION :

CHE-3

HONGYAN AUTO PARTS

CHERY

CHE-0022

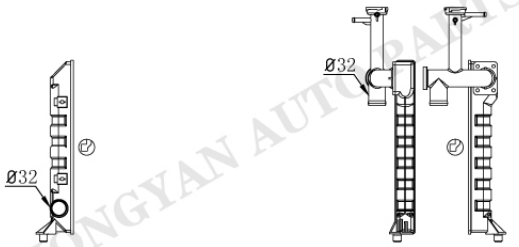

CHE-0023

Tank size :(R6.5×4.5×4.5×38×327)
OEM :
DPI :
NISSENS :
APPLICATION :

CHE-0024

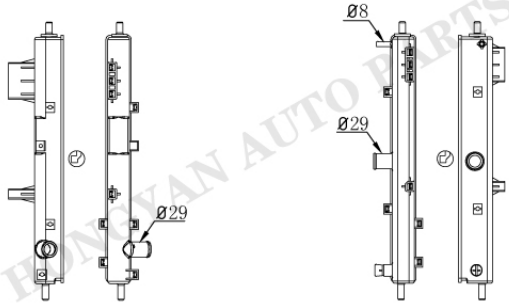

CHE-0025

Tank size :(R8X5×5×48×465)
OEM :
DPI :
NISSENS :
APPLICATION :

CHE-0026



CHE-0027

Tank size :(R8×5×5×38×105)
OEM :
DPI :
NISSENS :
APPLICATION :

CHE-0028



CHE-0029

Tank size :(R10×4×4.5×46×371)
OEM :
DPI :
NISSENS :
APPLICATION :

HONGYAN AUTO PARTS

CHERY

CHE-0030



CHE-0031

Tank size :(R10×4×4.5×46×371)
OEM :
DPI :
NISSENS :
APPLICATION :
CHERY A15

CHE-0032

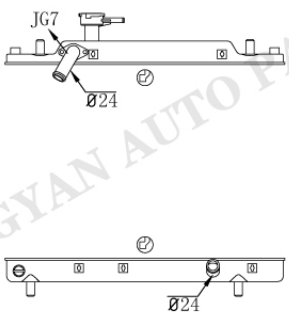

CHE-0013

Tank size :(R9×5×5×40×525)
OEM :
DPI :
NISSENS :
APPLICATION :
CHETY TIGGO

Tank size :
OEM :
DPI :
NISSENS :
APPLICATION :

Tank size :
OEM :
DPI :
NISSENS :
APPLICATION :

HONGYAN AUTO PARTS

	Tank size : OEM : DPI : NISSENS : APPLICATION :
	Tank size : OEM : DPI : NISSENS : APPLICATION :
	Tank size : OEM : DPI : NISSENS : APPLICATION :
	Tank size : OEM : DPI : NISSENS : APPLICATION :

HONGYAN AUTO PARTS

CITROEN

CI-0001

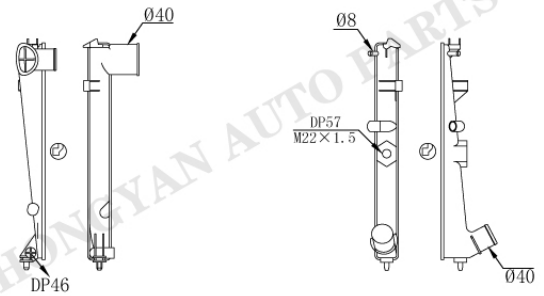

CI-0002

Tank size :(R8.5×5×5×44×407)
OEM :133019 1331HY 96138923
DPI :
NISSENS :61303
APPLICATION :
93-03 CITROEN XANTIA 1.6/1.8/2.0L

CI-0003

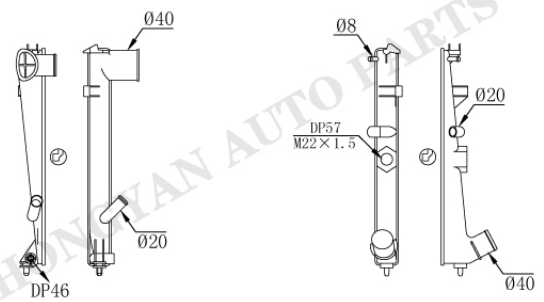

CI-0004

Tank size :(R8.5×5×5×44×407)
OEM :1301R5
DPI :
NISSENS :61301
APPLICATION :
94-98 CITROEN XANTIA 1.9L

CI-0001

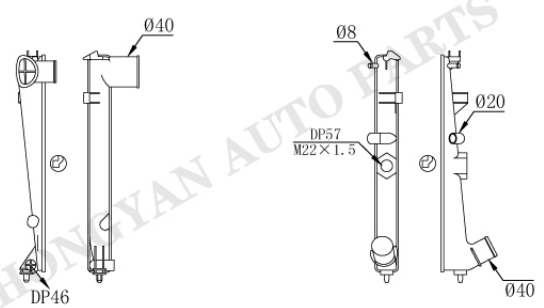

CI-0004

Tank size :(R8.5×5×5×44×407)
OEM :133018 1331JA 96108610
DPI :
NISSENS :61304 61233
APPLICATION :
93-03 CITROEN XANTIA 1.9/2.0L

CI-0003

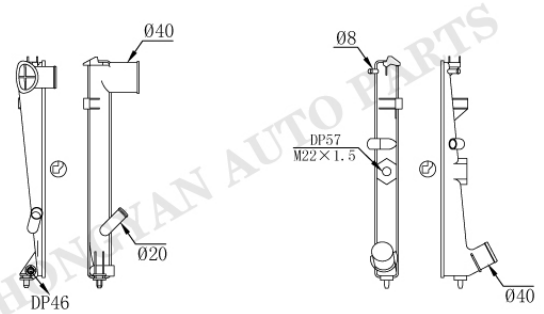

CI-0002

Tank size :(R8.5×5×5×44×407)
OEM :1301M1 1331JC 96151644
DPI :
NISSENS :61387
APPLICATION :
93-03 CITROEN XANTIA 1.6/1.8/2.0L

HONGYAN AUTO PARTS

CITROEN

CI-0005

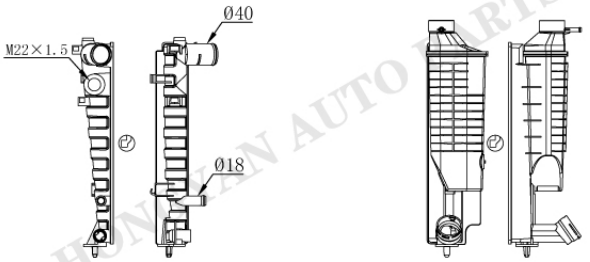

CI-0006

Tank size :(R7.5×4.5×5.5×50×378.5)
OEM :133045/6 1331CV/S
DPI :
NISSENS :61313 61313A 61317A
APPLICATION :
98-00 CITROEN XSARA
92-97 CITROEN ZX

CI-0005

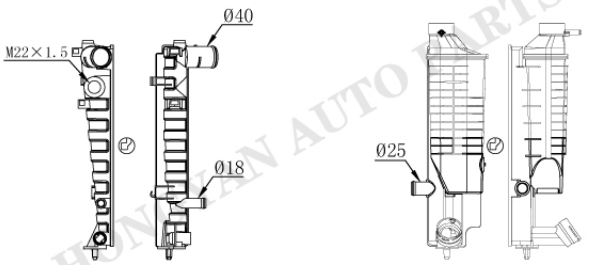

CI-0007

Tank size :(R7.5×4.5×5.5×50×378.5)
OEM :
DPI :
NISSENS :
APPLICATION :
98-00 CITROEN XSARA
92-97 CITROEN ZX

CI-0008

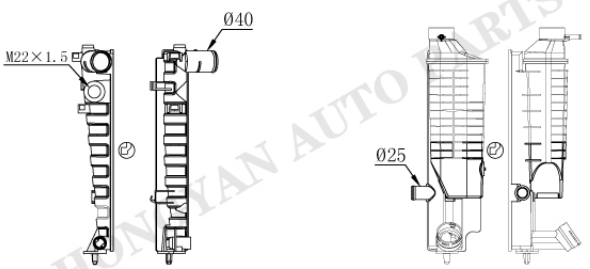

CI-0007

Tank size :(R7.5×4.5×5.5×50×378.5)
OEM :
DPI :
NISSENS :
APPLICATION :
98-00 CITROEN XSARA
92-97 CITROEN ZX

CI-0009

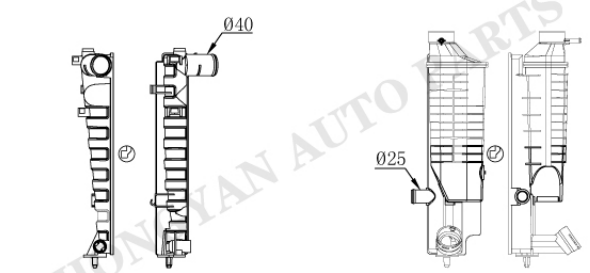

CI-0007

Tank size :(R7.5×4.5×5.5×50×378.5)
OEM :
DPI :
NISSENS :
APPLICATION :
98-00 CITROEN XSARA
92-97 CITROEN ZX

HONGYAN AUTO PARTS

CITROEN

	Tank size : OEM : DPI : NISSENS : APPLICATION :
	Tank size : OEM : DPI : NISSENS : APPLICATION :
	Tank size : OEM : DPI : NISSENS : APPLICATION :
	Tank size : OEM : DPI : NISSENS : APPLICATION :

HONGYAN AUTO PARTS

	Tank size : OEM : DPI : NISSENS : APPLICATION :
	Tank size : OEM : DPI : NISSENS : APPLICATION :
	Tank size : OEM : DPI : NISSENS : APPLICATION :
	Tank size : OEM : DPI : NISSENS : APPLICATION :

HONGYAN AUTO PARTS

DAEWOO

DA-0001AT/MT

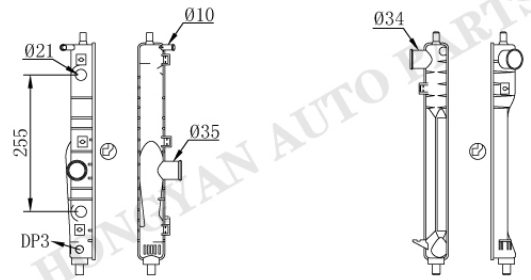

Tank size :(R10×4.5×5×51/46×407)
OEM :96351103/1931 96181369
96273596/7 96351931
DPI :2381 2379
NISSENS :616671
APPLICATION :
99-02 DAEWOO LEGANZA 2.2L
99-02 DAEWOO NUBIRA 2.0L

DA-0002

DA-0003AT/MT

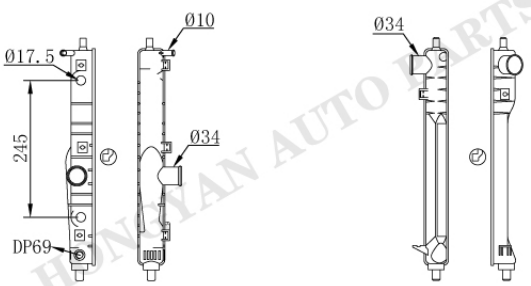

Tank size :(R10×4.5×5×46×407)
OEM :96351103/1931 96181369
96273596/7 96351931
DPI :2381 2379
NISSENS :616671
APPLICATION :
99-02 DAEWOO LEGANZA 2.2L
99-02 DAEWOO NUBIRA 2.0L

DA-0002

DA-0003-1AT

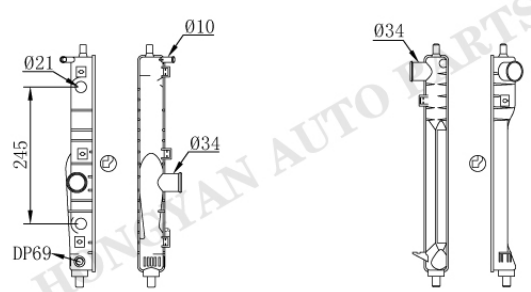

Tank size :(R10×4.5×5×46×407)
OEM :96351103/1931 96181369
96273596/7 96351931
DPI :2381 2379
NISSENS :616671
APPLICATION :
99-02 DAEWOO LEGANZA 2.2L
99-02 DAEWOO NUBIRA 2.0L

DA-0002

DA-0004AT/MT

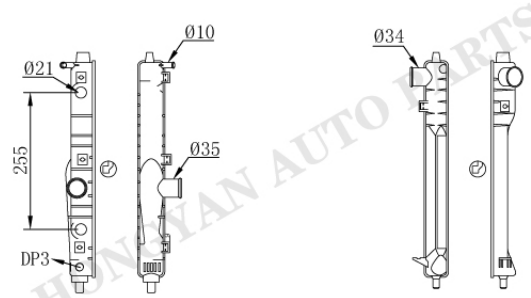

Tank size :(R10×4.5×5×51/46×407)
OEM :96351931
DPI :2384
NISSENS :616591
APPLICATION :
97- DAEWOO NUBIRA 1.5/1.6/1.8L

DA-0005

HUNGYAN AUTO PARTS

DAEWOO

DA-0006AT/MT

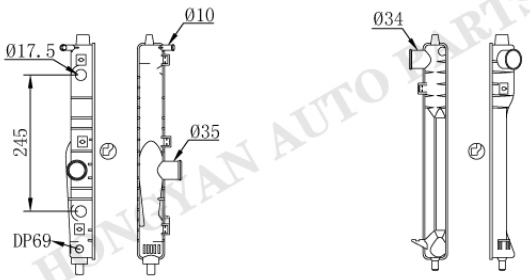

DA-0005

Tank size :(R10×4.5×5×51/46×407)
OEM :96351931
DPI :2384
NISSENS :616591
APPLICATION :
97- DAEWOO NUBIRA 1.5/1.6/1.8L

DA-0007AT/MT

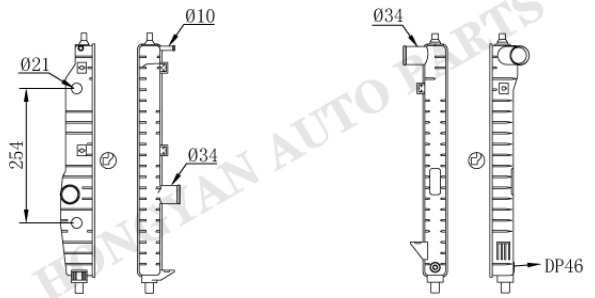

DA-0008

Tank size :(R10.5×4×4.5×46×438.5)
OEM :96443478 96444386 96536527
96816483/4 96536525/6
DPI :2873 2774
NISSENS :61636
APPLICATION :
04-08 CHEVROLET AVEO 1.6L
04-08 SUZUKI SWIGT 1.6L

DA-0009AT/MT

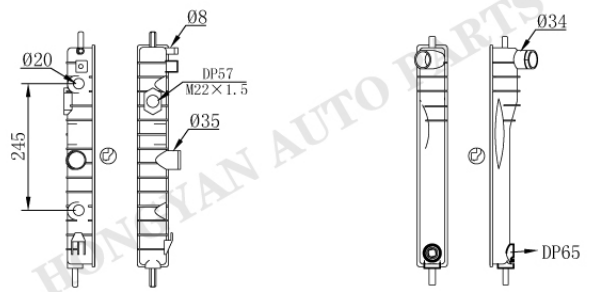

DA-0010

Tank size :(R5×6×5×58×417)
OEM :96144847
DPI :61651A 616521
NISSENS :
APPLICATION :
95-97 DAEWOO NEXIA 1.5L
95-97 DAEWOO CIELO 1.5L

DA-0011

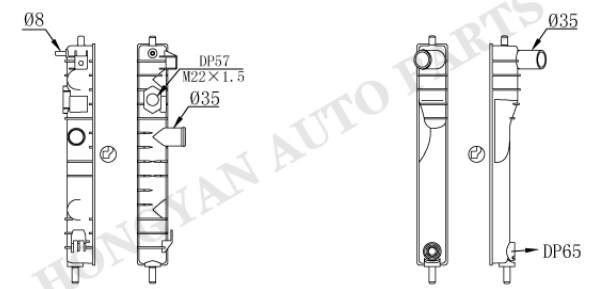

DA-0012

Tank size :(R5×5×4×58×416)
OEM :96144847
DPI :61651A 616521
NISSENS :
APPLICATION :
95-97 DAEWOO NEXIA 1.5L
95-97 DAEWOO CIELO 1.5L

HONGYAN AUTO PARTS

DAEWOO

DA-0013

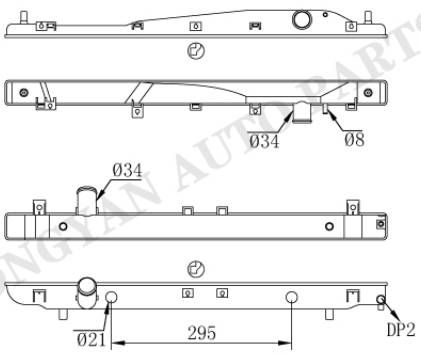

DA-0014AT/MT

Tank size :(R9×4×5×48/51×717)
OEM :
DPI :
NISSENS :
APPLICATION :
02- DAEWOO MAGNUS 2.0L
02- DAEWOO EVANDA 2.0L

DA-0015

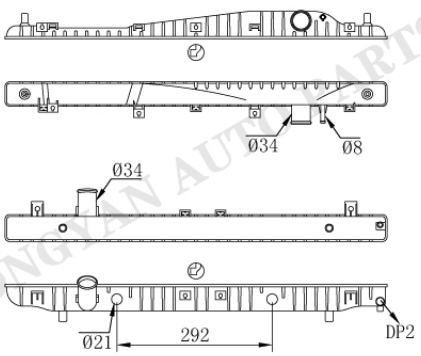

DA-0016AT/MT

Tank size :(R9×4.5×5×46/51×717)
OEM :96278701 96328701
96475475 P96278701
DPI :13000
NISSENS :61639 61638
APPLICATION :
02-07 DAEWOO MAGNUS 2.0L
02-07 DAEWOO EVANDA 2.0L

DA-0015

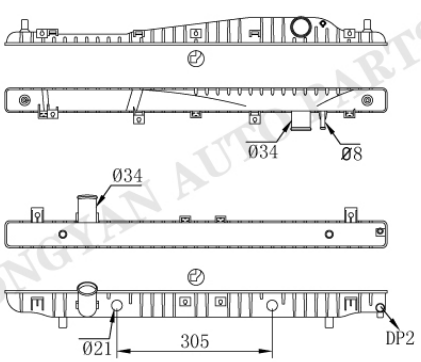

DA-0016-1AT

Tank size :(R9×4.5×5×46/51×717)
OEM :96278701 96328701
96475475 P96278701
DPI :13000
NISSENS :61639 61638
APPLICATION :
02-07 DAEWOO EVANDA 2.0L

DA-0017AT/MT

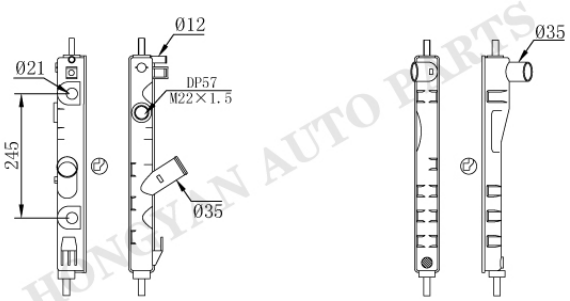

DA-0018

Tank size :(R10×4.5×4.5×46×407)
OEM :96109532/A 96143947
DPI :
NISSENS :61656 61657
APPLICATION :
95-97 DAEWOO ESPERO 1.5/1.8/2.0L

HONGYAN AUTO PARTS

DA-0019AT/MT

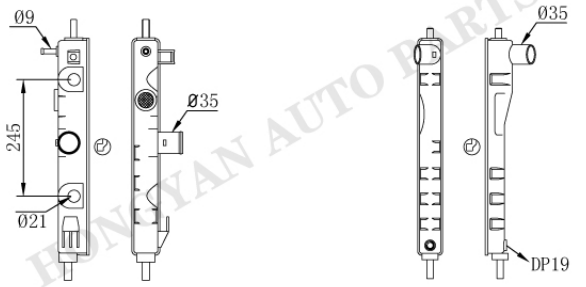

DA-0020

Tank size :(R10×4.5×4.5×46×407)
OEM :
DPI :
NISSENS :
APPLICATION :
94- DAEWOO RACER

DA-0021AT/MT

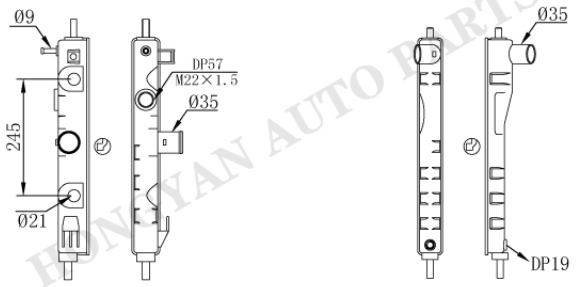

DA-0020

Tank size :(R10×4.5×4.5×46×407)
OEM :
DPI :
NISSENS :
APPLICATION :
94- DAEWOO RACER

DA-0022

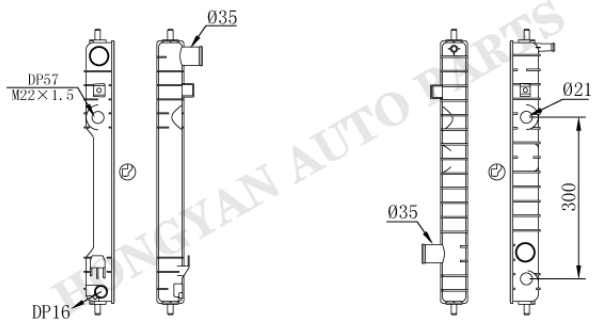

DA-0023AT/MT

Tank size :(R4×6×5×58.5×493)
OEM :
DPI :
NISSENS :
APPLICATION :

DA-0024

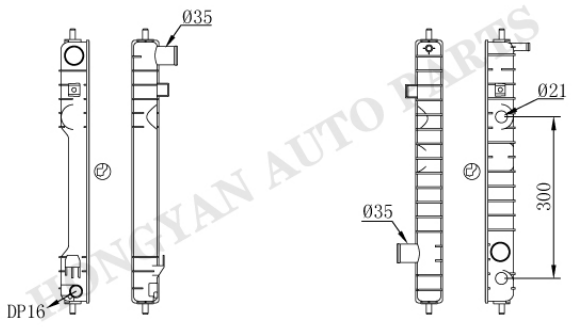

DA-0023AT/MT

Tank size :(R4×6×5×58.5×493)
OEM :
DPI :
NISSENS :
APPLICATION :

HONGYAN AUTO PARTS

DAEWOO

DA-0025AT/MT

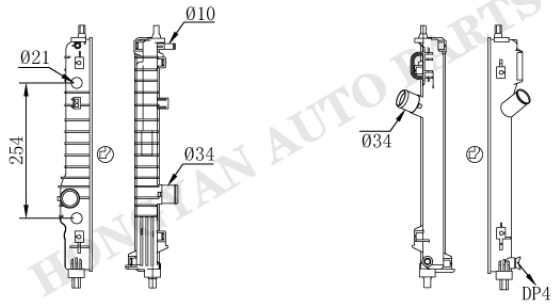

Tank size :(R10.5×4×4.5×46×439)
OEM :
DPI :
NISSENS :
APPLICATION :
09- CHEVROLET KALOS 1.4/1.6L

DA-0026

DA-0027

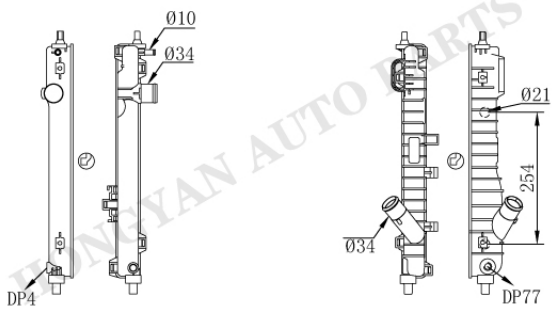

Tank size :(R10.5×4×4.5×46×439)
OEM :96942182
DPI :
NISSENS :
APPLICATION :
09-15 CHEVROLET AVEO 1.6L

DA-0028AT/MT

DA-0027

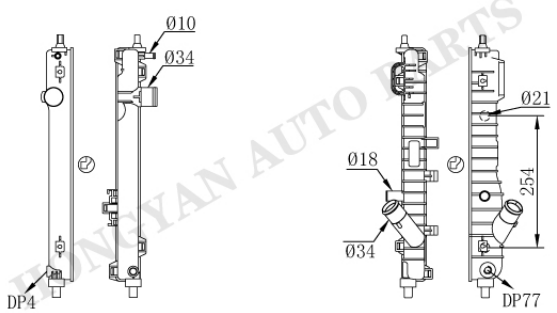

Tank size :(R10.5×4×4.5×46×439)
OEM :96942182
DPI :13097
NISSENS :
APPLICATION :
09-15 CHEVROLET AVEO 1.6L

DA-0029AT/MT

DA-0030



Tank size :(R10×4×4.5×51×317)
OEM :
DPI :
NISSENS :
APPLICATION :
DAEWOO

DA-0031

HONGYAN AUTO PARTS

DAEWOO

DA-0032

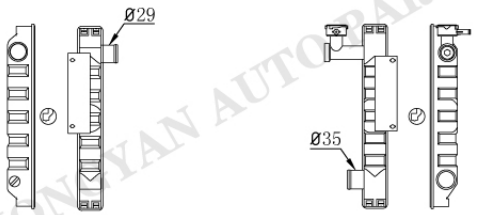

DA-0033

Tank size :(R9.5×4×5×48×347)
OEM :
DPI :
NISSENS :
APPLICATION :
DAEWOO DAMAS

DA-0034

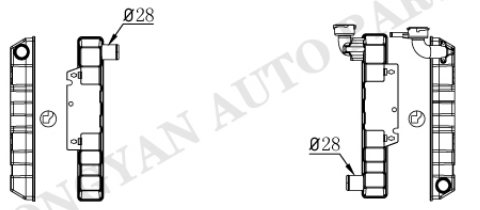

DA-0035

Tank size :(R8.5×4.5×4.5×50×310)
OEM :
DPI :
NISSENS :
APPLICATION :
DAEWOO

DA-0036

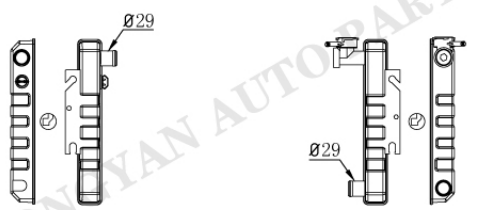

DA-0037

Tank size :(R9.5×4×4.5×47×311)
OEM :
DPI :
NISSENS :
APPLICATION :
DAEWOO

DA-0038

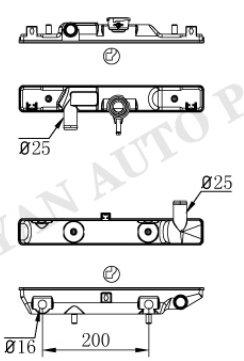

DA-0039AT/MT

Tank size :(R8.5×4.5×4.5×48×348)
OEM :1770060D40
DPI :
NISSENS :
APPLICATION :
DAEWOO

HONGYAN AUTO PARTS

DAEWOO

DA-0040AT/MT

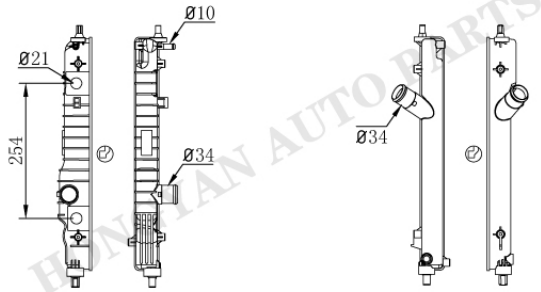

DA-0041

Tank size : (R9.5×4×4.5×46×439)
OEM :
DPI :
NISSENS :
APPLICATION :
09- KALOS

DA-0042AT/MT

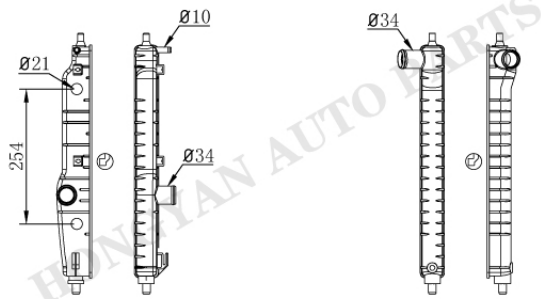

DA-0043

Tank size : (R10.5×4.3×4.5×46×438.2)
OEM :
DPI :
NISSENS :
APPLICATION :

Tank size :
OEM :
DPI :
NISSENS :
APPLICATION :

Tank size :
OEM :
DPI :
NISSENS :
APPLICATION :

HONGYAN AUTO PARTS

	Tank size : OEM : DPI : NISSENS : APPLICATION :
	Tank size : OEM : DPI : NISSENS : APPLICATION :
	Tank size : OEM : DPI : NISSENS : APPLICATION :
	Tank size : OEM : DPI : NISSENS : APPLICATION :

HONGYAN AUTO PARTS

	Tank size : OEM : DPI : NISSENS : APPLICATION :
	Tank size : OEM : DPI : NISSENS : APPLICATION :
	Tank size : OEM : DPI : NISSENS : APPLICATION :
	Tank size : OEM : DPI : NISSENS : APPLICATION :

HONGYAN AUTO PARTS

DAIHATSU

DAI-0001

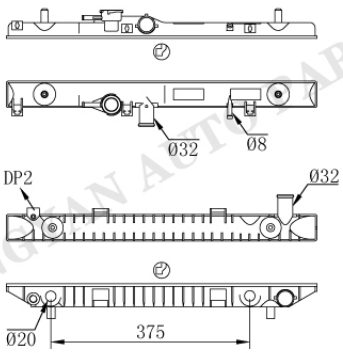

DAI-0002AT/MT

Tank size :(R4×4×4.5×50×582.8)
OEM :1640087402
DPI :
NISSENS :61741A 61742A
APPLICATION :
97-00 DAIHATSU TERIOS 1.3L

DAI-0003

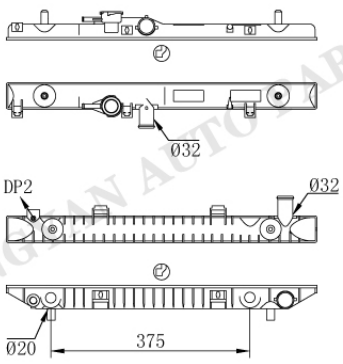

DAI-0004AT/MT

Tank size :(R4×4×4.5×50×582.8)
OEM :
DPI :
NISSENS :
APPLICATION :
97-00 DAIHATSU TERIOS 1.3L

DAI-0005

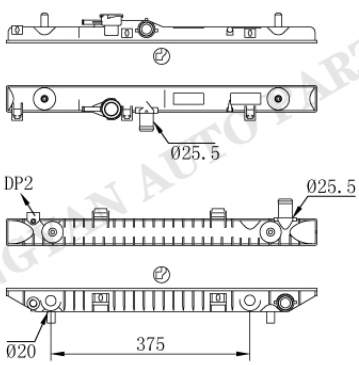

DAI-0006AT/MT

Tank size :(R4×4×4.5×50×582.8)
OEM :1640087406
DPI :
NISSENS :
APPLICATION :
97-00 DAIHATSU TERIOS 1.3L

DAI-0007

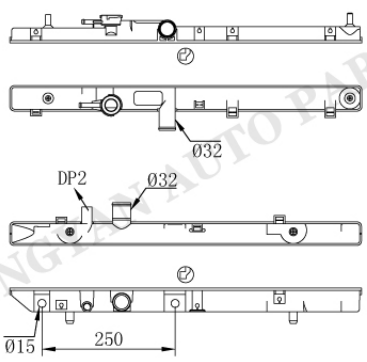

DAI-0008AT/MT

Tank size :(R9×4×4.5×48×659.4)
OEM :1640087F37000/F30000
DPI :
NISSENS :
APPLICATION :
93- DAIHATSH APPLAUSE 1.3L
93- DAIHATSH CHARADE 1.3L
93- DAIHATSH PYZAR 1.3L

HONGYAN AUTO PARTS

DAI-1

DAIHATSU

DAI-0007

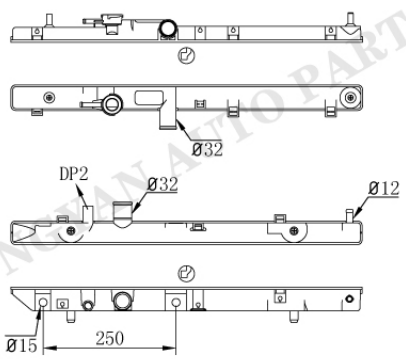

DAI-0009AT/MT

Tank size :(R9×4×4.5×48×659.4)
OEM :1640087F33000/F41000
DPI :
NISSENS :
APPLICATION :
93- DAIHATSH CHARADE 1.3L
93- DAIHATSH PYZAR 1.3L

DAI-0010

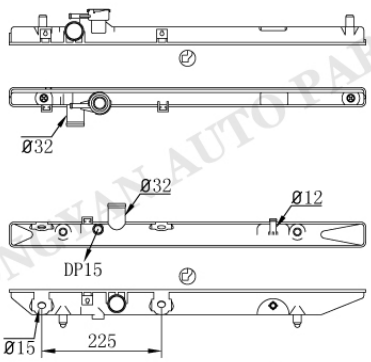

DAI-0011AT/MT

Tank size :(R8×5×5×36/47×670)
OEM :1640087F27000/28000
DPI :
NISSENS :
APPLICATION :
90-93 DAIHATSH CHARADE 1.3L

DAI-0012

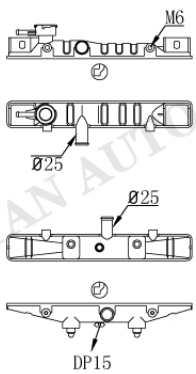

DAI-0013

Tank size :(R10×5×5×49×348)
OEM :1640087767000
DPI :222
NISSENS :61752
APPLICATION :
87-92 DAIHATSH CHARADE 1.0L

DAI-0014

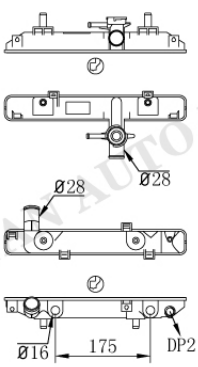

DAI-0015AT/MT

Tank size :(R9×4×5×48×342)
OEM :16400B1010000 16400B1030
DPI :
NISSENS :617548 617549
APPLICATION :
05-13 DAIHATSH BOON 1.3/1.5L
05-13 DAIHATSH SIRION 1.3/1.5L

HONGYAN AUTO PARTS

DAIHATSU

DAI-0016

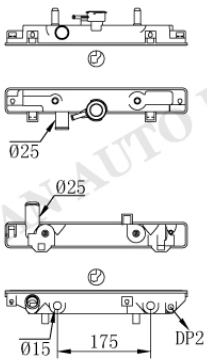

DAI-0017AT/MT

Tank size :(R9×4×5×48×342)
OEM :1640097202/09/10/06/11/12/13
DPI :
NISSENS :61740
APPLICATION :
98-03 DAIHATSU MIRA
98-05 DAIHATSU OPTI
98-05 DAIHATSU MOVE

DAI-0018

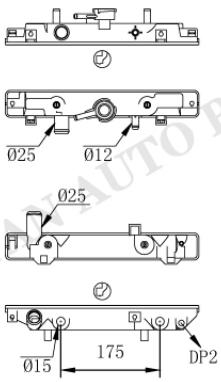

DAI-0017AT/MT

Tank size :(R9×4×5×48×342)
OEM :1640097207/14/17/18
DPI :
NISSENS :
APPLICATION :
98-03 DAIHATSU MIRA
98-05 DAIHATSU OPTI
98-05 DAIHATSU MOVE

DAI-0019

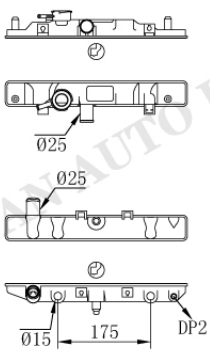

DAI-0020AT/MT

Tank size :(R9×4×5×48×342)
OEM :1640087256/70/91/94
DPI :
NISSENS :
APPLICATION :
90-98 DAIHATSU MIRA

DAI-0021

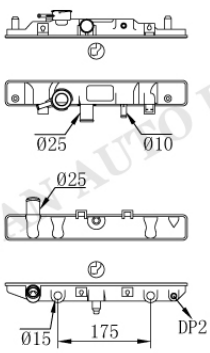

DAI-0020AT/MT

Tank size :(R9×4×5×48×342)
OEM :1640087367/71/88/59
DPI :
NISSENS :
APPLICATION :
90-98 DAIHATSU MIRA

HONGYAN AUTO PARTS

DAIHATSU

DAI-0022

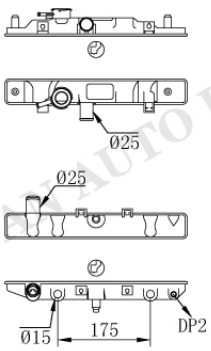

DAI-0020AT/MT

Tank size :(R9×4×5×48×342)
OEM :1640087256/70/91/94
DPI :
NISSENS :
APPLICATION :
90-98 DAIHATSU MIRA

DAI-0023

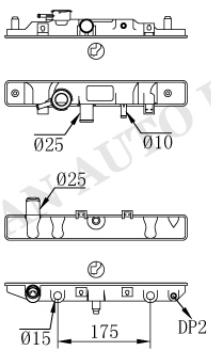

DAI-0020AT/MT

Tank size :(R9×4×5×48×342)
OEM :
DPI :
NISSENS :
APPLICATION :
90-98 DAIHATSU MIRA

DAI-0024

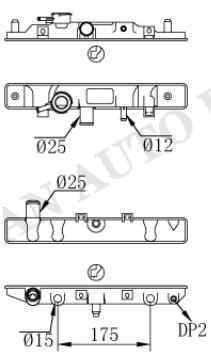

DAI-0020AT/MT

Tank size :(R9×4×5×48×342)
OEM :
DPI :
NISSENS :
APPLICATION :
90-98 DAIHATSU MIRA

DAI-0025

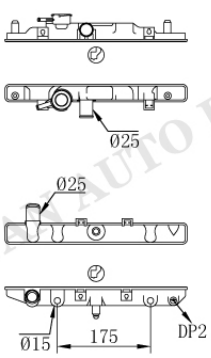

DAI-0026AT/MT

Tank size :(R9×4×5×33/40×342)
OEM :1640087287/86/54/69
DPI :
NISSENS :
APPLICATION :
90-98 DAIHATSU MIRA CUORE

HONGYAN AUTO PARTS

DAIHATSU

DAI-0027

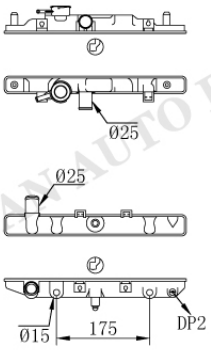

DAI-0026AT/MT

Tank size :(R9×4×5×33/40×342)
OEM :1640087287/86/54/69
DPI :
NISSENS :
APPLICATION :
90-98 DAIHATSU MIRA CUORE

DAI-0028

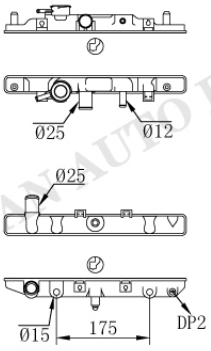

DAI-0026AT/MT

Tank size :(R9×4×5×33/40×342)
OEM :1640087257/99
DPI :
NISSENS :
APPLICATION :
90-98 DAIHATSU MIRA CUORE

DAI-0029

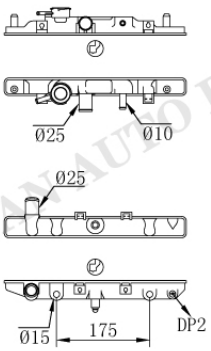

DAI-0026AT/MT

Tank size :(R9×4×5×33/40×342)
OEM :
DPI :
NISSENS :
APPLICATION :
90-98 DAIHATSU MIRA CUORE

DAI-0030

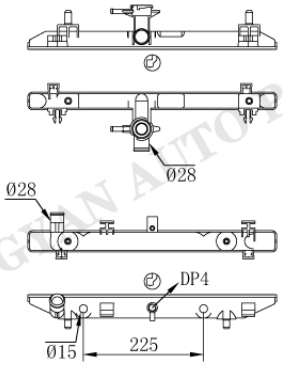

DAI-0031AT/MT

Tank size :(RR9×4×5×33/40×467)
OEM :
DPI :
NISSENS :
APPLICATION :
DAIHATSU PRRODUA ALZA

HONGYAN AUTO PARTS

DAIHATSU

DAI-0032

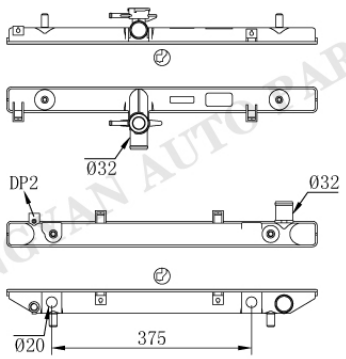

DAI-0033AT/MT

Tank size :(R9×4×5×48×582.5)
OEM :
DPI :
NISSENS :
APPLICATION :
07- DAIHATSU TERIOS

DAI-0034

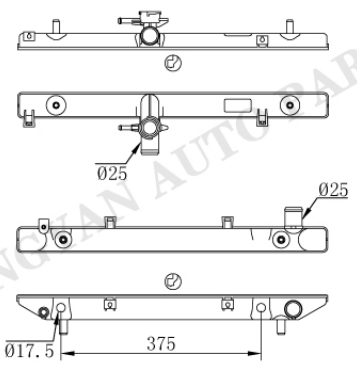

DAI-0035AT/MT

Tank size :(R9×4×5×48×582.5)
OEM :
DPI :
NISSENS :
APPLICATION :
07- DAIHATSU TERIOS

DAI-0036

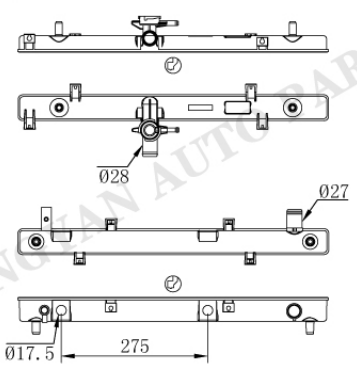

DAI-0037AT/MT

Tank size :(R9×4×5×48×583)
OEM :16400B1140
DPI :
NISSENS :
APPLICATION :
05-11 DAIHATSU BEGO
05-11 DAIHATSU TERIOS

DAI-0038

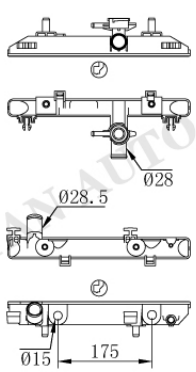

DAI-0039AT/MT

Tank size :(R9×4×4.5×33/40×342)
OEM :16400B1020/70
DPI :
NISSENS :
APPLICATION :
04- DAIHATSU BOON

HONGYAN AUTO PARTS

DAIHATSU

DAI-0040

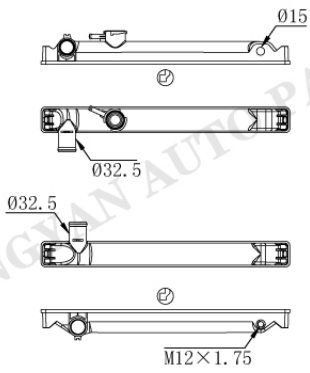

DAI-0041

Tank size :(R9×4×5×48×467)
OEM :
DPI :
NISSENS :
APPLICATION :
90- DAIHATSU HIJET

DAI-0042

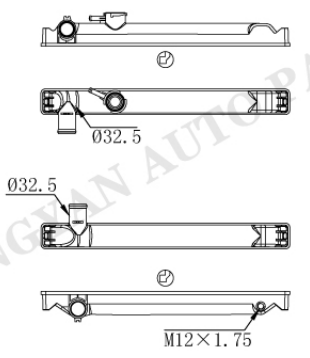

DAI-0041

Tank size :(R9×4×5×48×467)
OEM :
DPI :
NISSENS :
APPLICATION :
90- DAIHATSU HIJET

DAI-0043

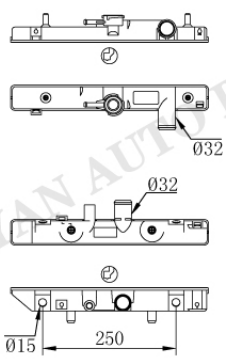

DAI-0044AT/MT

Tank size :(R7.5×4×4.5×48×371)
OEM :1640087776
DPI :
NISSENS :61748
APPLICATION :
93- DAIHATSH CHARADE 1.3L

DAI-0045

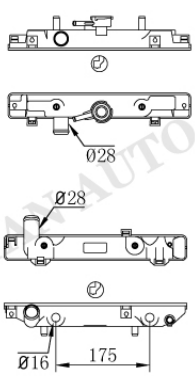

DAI-0046AT/MT

Tank size :(R9×4×4.5×48×342.5)
OEM :
DPI :
NISSENS :
APPLICATION :
98-03 DAIHATSU MIRA
98-05 DAIHATSU OPTI
98-05 DAIHATSU MOVE

HONGYAN AUTO PARTS

DAIHATSU

DAI-0047

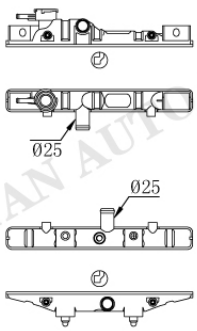

Tank size :(R9.5×5×4.5×41.5×349.5)
OEM :1640087767000
DPI :
NISSENS :
APPLICATION :
87-92 DAIHATSH CHARADE 1.0L

DAI-0048

DAI-0049

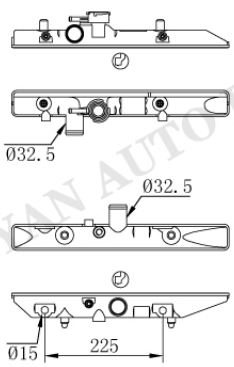

Tank size :(R9×4.5×4.8×49×407.5)
OEM :1640087F11000/F12000
DPI :
NISSENS :
APPLICATION :
87-92 DAIHATSH CHARADE 1.0L

DAI-0050AT/MT

DAI-0051

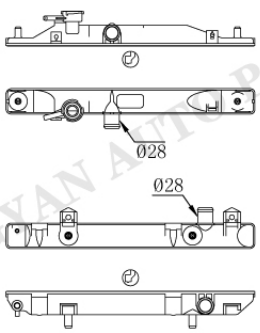

Tank size :(R9×4×5×48×467)
OEM :1640097503000/5000
DPI :
NISSENS :
APPLICATION :
98- DAIHATSU HIJET

DAI-0052

DAI-0053

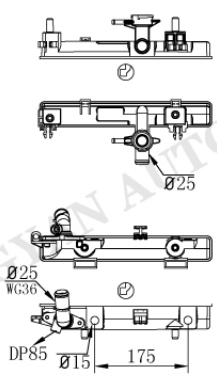

Tank size :(R9×4×4.5×47.5×323)
OEM :16400B2190/2200
DPI :
NISSENS :
APPLICATION :
07-12 DAIHATSU CUORE
07-12 DAIHATSU MIRA

DAI-0054AT/MT

DAI-8

HONGYAN AUTO PARTS

DAIHATSU

DAI-0055

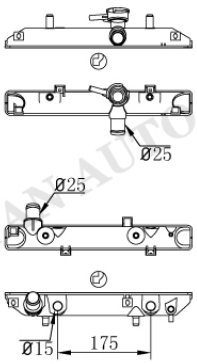

DAI-0056AT/MT

Tank size :(R9×5×4×46.5×352)
OEM :16400B2120/2070
DPI :
NISSENS :61739
APPLICATION :
03- DAIHATSU MIRA
03- DAIHATSU CUORE

DAI-0057

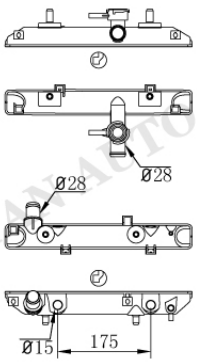

DAI-0058AT/MT

Tank size :(R9×5×4×46.5×352)
OEM :
DPI :
NISSENS :
APPLICATION :
03- DAIHATSU MIRA
03- DAIHATSU CUORE

DAI-0059

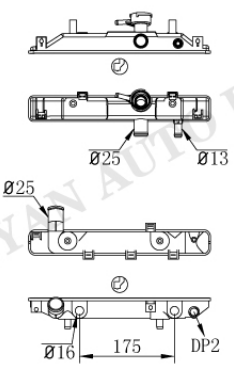

DAI-0060AT/MT

Tank size :(R9×4×5×48×342)
OEM :
DPI :
NISSENS :
APPLICATION :
DAIHATSU MIRA

DAI-0061

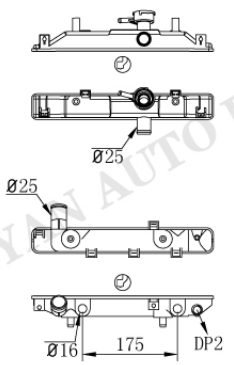

DAI-0060AT/MT

Tank size :(R9×4×5×48×342)
OEM : 16400B2050000 16400B2010000
DPI :
NISSENS :
APPLICATION :
DAIHATSU MIRA

HONGYAN AUTO PARTS

DAIHATSU

DAI-0062

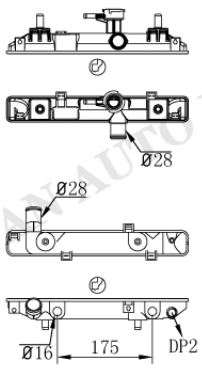

DAI-0015AT/MT

Tank size :(R9×4×5×48×342)
OEM :16400B1080
DPI :
NISSENS :
APPLICATION :
DAIHATSU BOON
TOYOTA PASSO
TOYOTA BB

DAI-0063

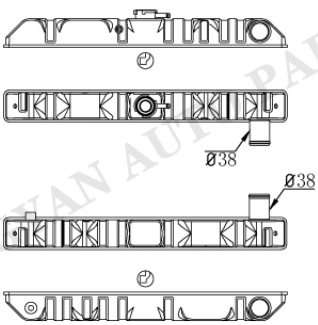

DAI-0064

Tank size :(R10×5×5×60×533)
OEM :
DPI :
NISSENS :
APPLICATION :

DAI-0063

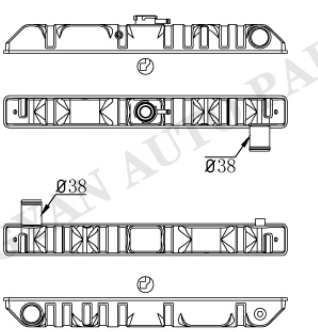

DAI-0065

Tank size :(R10×5×5×60×533)
OEM :
DPI :
NISSENS :
APPLICATION :

DAI-0063

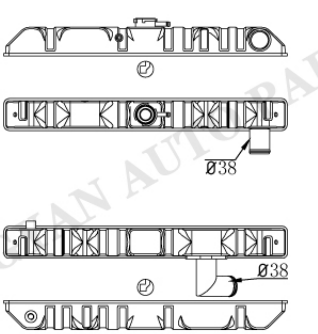

DAI-0066

Tank size :(R10×5×5×60×533)
OEM :
DPI :
NISSENS :
APPLICATION :

DAI:10

HONGYAN AUTO PARTS

DAIHATSU

DAI-0067

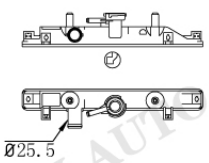

Tank size :(R9×4.5×5×39.5×339)
OEM :
DPI :
NISSENS :
APPLICATION :
DAIHATSU MOVE

DAI-0069

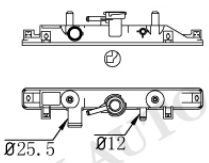

Tank size :(R9×4.5×5×39.5×339)
OEM :
DPI :
NISSENS :
APPLICATION :
DAIHATSU MOVE

DAI-0071

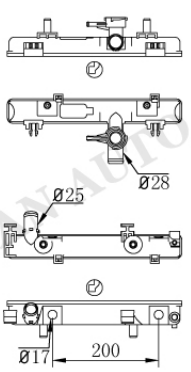

DAI-0072AT/MT

Tank size :(R9.5×4.5×5×45.5×328)
OEM :
DPI :
NISSENS :
APPLICATION :
DAIHATSU MOVE

DAI-0073

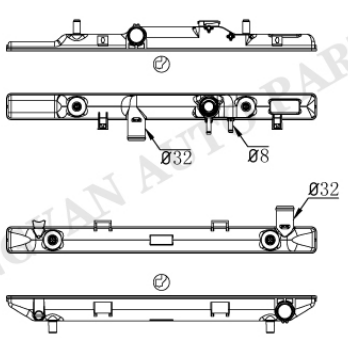

DAI-0074

Tank size :(R9×4×4.5×48×582.5)
OEM :
DPI :
NISSENS :
APPLICATION :
02- DAIHATSU PRAMVKA

HONGYAN AUTO PARTS

DAIHATSU

DAI-0075

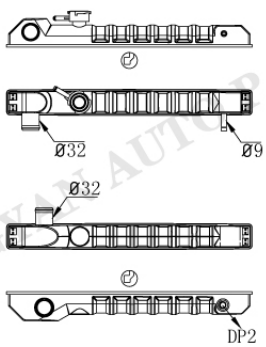

DAI-0076

Tank size :(R6.5×4.5×5×47×462)
OEM :
DPI :
NISSENS :
APPLICATION :
DAIHATSU

DAI-0077

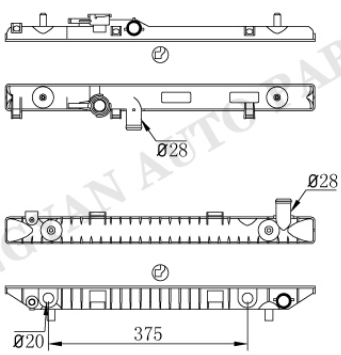

DAI-0078AT/MT

Tank size :(R4×4×4.5×50×582.8)
OEM :
DPI :
NISSENS :
APPLICATION :
97-00 DAIHATSU TERIOS 1.3L

DAI-0079

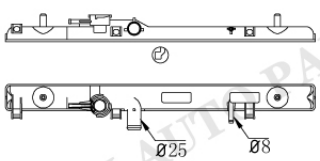

Tank size :(R4×4×4.5×50×582.8)
OEM :
DPI :
NISSENS :
APPLICATION :
97-00 DAIHATSU TERIOS 1.3L

DAI-0081

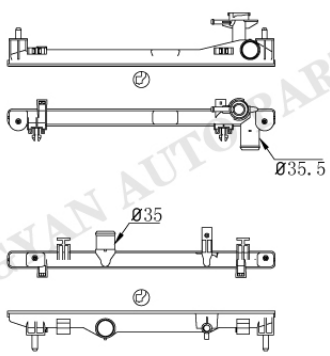

DAI-0082

Tank size :(R9×4×4.5×32×502.5)
OEM :
DPI :
NISSENS :
APPLICATION :

DAI:12

HONGYAN AUTO PARTS

DAIHATSU

DAI-0032

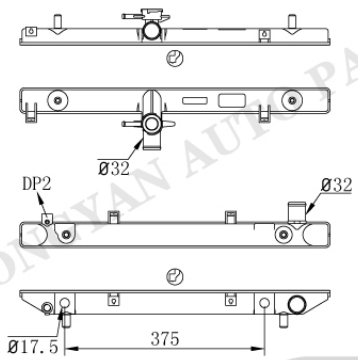

DAI-0033-1AT

Tank size :(R9×4×5×48×582.5)
OEM :
DPI :
NISSENS :
APPLICATION :
07- DAIHATSU TERIOS

Tank size :
OEM :
DPI :
NISSENS :
APPLICATION :

Tank size :
OEM :
DPI :
NISSENS :
APPLICATION :

Tank size :
OEM :
DPI :
NISSENS :
APPLICATION :

HONGYAN AUTO PARTS

DAIHATSU

	Tank size : OEM : DPI : NISSENS : APPLICATION :
	Tank size : OEM : DPI : NISSENS : APPLICATION :
	Tank size : OEM : DPI : NISSENS : APPLICATION :
	Tank size : OEM : DPI : NISSENS : APPLICATION :

HONGYAN AUTO PARTS

FIAT

FI-0001



HONGYAN AUTO PARTS

FI-0002

Tank size :(R8×3.5×5×41×242.5)
OEM :4641407/5843 46405843
DPI :
NISSENS :61814
APPLICATION :
91- FIAT CINQUECENTO 1.1L
98- FIAT SEICENTO 0.9/1.1L

FI-0003



HONGYAN AUTO PARTS

FI-0004

Tank size :(R4.5×4×6×47.4×248.4)
OEM :46777410 46825900
DPI :
NISSENS :617731
APPLICATION :
00- FIAT PANDA 1.1L

FI-0005



HONGYAN AUTO PARTS

FI-0006

Tank size :(R8×5×5×40.5×284)
OEM :46558704
DPI :
NISSENS :61785
APPLICATION :
98- FIAT SEICENTO 1.1L

FI-0007



HONGYAN AUTO PARTS

FI-0006

Tank size :(R8×5×5×40.5×284)
OEM :
DPI :
NISSENS :
APPLICATION :
98- FIAT SEICENTO 1.1L

FIAT

FI-0008

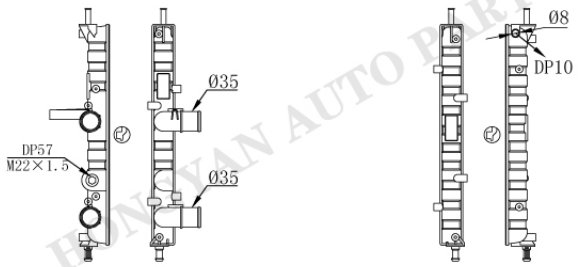

FI-0009

Tank size :(R4.5×4×5.9×42.8×415)
OEM :46420484/5657 46514942
46525657/9669
46535003/7992
DPI :
NISSENS :61786 61786A
APPLICATION :
95- FIAT BRAVA 1.2/1.4/1.6L
95- FIAT BRAVO 1.2/1.4/1.6L
95- FIAT MAREA 1.2/1.4/1.6L
95- FIAT MULTIPLA 1.6L

FI-0010

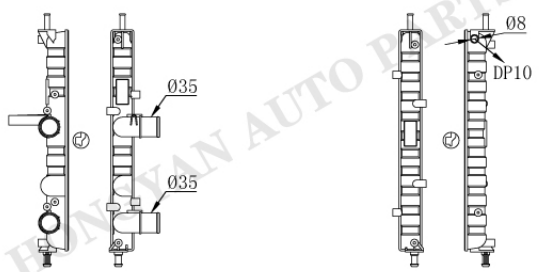

FI-0009

Tank size :(R4.5×4×5.9×42.8×415)
OEM :46809638
DPI :
NISSENS :617843
APPLICATION :
95- FIAT BRAVA 1.6L
95- FIAT BRAVO 1.6L

FI-0011

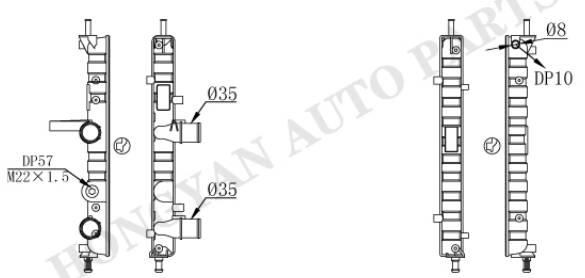

FI-0012

Tank size :(R4.5×4×5.9×42.8×415)
OEM :
DPI :
NISSENS :
APPLICATION :
95- FIAT BRAVA 1.2/1.4/1.6L
95- FIAT BRAVO 1.2/1.4/1.6L
95- FIAT MAREA 1.2/1.4/1.6L

FI-0013

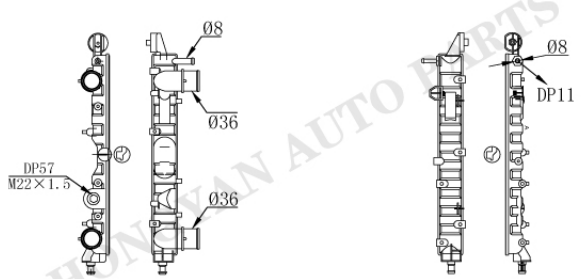

FI-0014

Tank size :(R4.5×4×5.9×47.4×377.9)
OEM :46404422 46421466 71735370
DPI :
NISSENS :61869 61816
APPLICATION :
93- FIAT COUPE 1.8/2.0L
93- FIAT TIPO 1.9L
89- LANCIA DEDRA 1.8/1.9/2.0L
93- LANCIA DELTA 1.8L

HONGYAN AUTO PARTS

FIAT

FI-0015

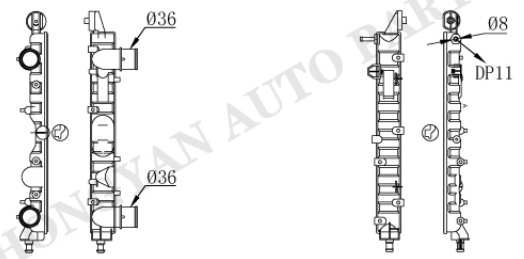

FI-0014

Tank size :(R4.5×4×5.9×47.4×377.9)
OEM :
DPI :
NISSENS :
APPLICATION :
93- FIAT COUPE 1.8/2.0L
93- FIAT TIPO 1.9L
89- LANCIA DEDRA 1.8/1.9/2.0L
93- LANCIA DELTA 1.8L

FI-0016

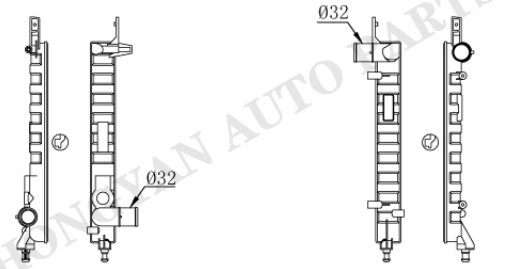

FI-0017

Tank size :(R4.5×4×5.9×47.4×377.9)
OEM :
DPI :
NISSENS :
APPLICATION :
93- FIAT COUPE 1.8/2.0L
93- FIAT TIPO 1.9L

FI-0018

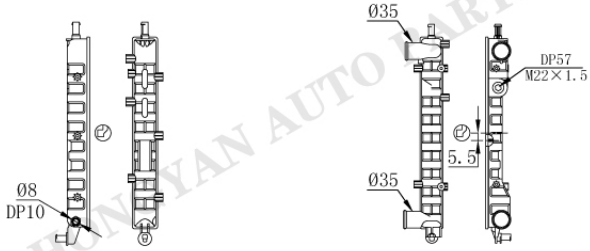

FI-0019

Tank size :(R4.5×4×5×47.5×359.5)
OEM :46417059 46548485 46750718
DPI :
NISSENS :61802
APPLICATION :
96- FIAT PALIO 1.2/1.4/1.6L
96- FIAT SIENA 1.2/1.4/1.6L
99- FIAT STRADA 1.2L

FI-0018

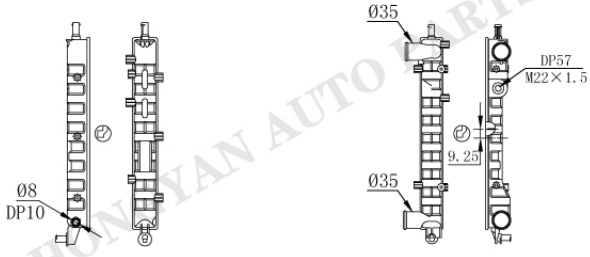

FI-0020

Tank size :(R4.5×4×5×47.5×359.5)
OEM :
DPI :
NISSENS :
APPLICATION :
96- FIAT PALIO 1.2/1.4/1.6L
96- FIAT SIENA 1.2/1.4/1.6L
99- FIAT STRADA 1.2L

HONGYAN AUTO PARTS

FIAT

FI-0021

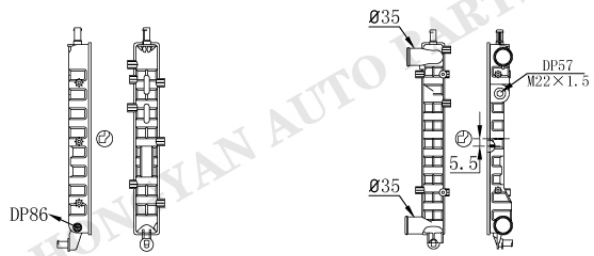

FI-0019

Tank size :(R4.5×4×5×47.5×359.5)
OEM :46449104 46548483
46750717 46780326
DPI :
NISSENS :61801
APPLICATION :
96- FIAT PALIO 1.2/1.4L
96- FIAT SIENA 1.2L

FI-0022

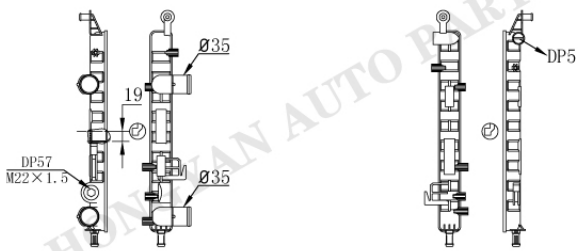

FI-0023

Tank size :(R11×4×5×42×378)
OEM :46815887/9261 46833511
DPI :
NISSENS :61683
APPLICATION :
96- FIAT PALIO 1.2/1.6L
96- FIAT SIENA 1.2/1.6L
02- FIAT ALBEA 1.2/1.4L

FI-0024

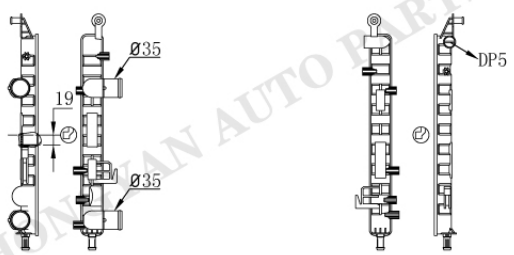

FI-0023

Tank size :(R11×4×5×42×378)
OEM :
DPI :
NISSENS :
APPLICATION :
96- FIAT PALIO 1.2/1.6L
96- FIAT SIENA 1.2/1.6L
02- FIAT ALBEA 1.2/1.4L

FI-0025

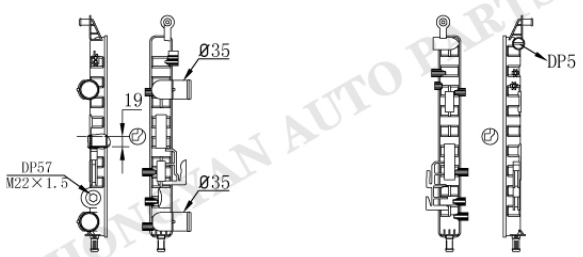

FI-0026

Tank size :(R11×4×5×42×378)
OEM :46826678 46847431/2
46815889
DPI :
NISSENS :61684
APPLICATION :
96- FIAT PALIO 1.2/1.6L
96- FIAT SIENA 1.2/1.6L
02- FIAT ALBEA 1.2/1.4L

HUNGYAN AUTO PARTS

FI-0027



FI-0028

Tank size :(R11.5×4×6×43×230)
OEM :46405843 4641407/207
4645843/75456 46521747
DPI :
NISSENS :
APPLICATION :
91- FIAT CINQUECENTO 1.1L
98- FIAT SEICENTO 0.9/1.1L

FI-0029



FI-0030

Tank size :(R8.5×4.5×6×46.5×233)
OEM :
DPI :
NISSENS :
APPLICATION :
FIAT

FI-0031

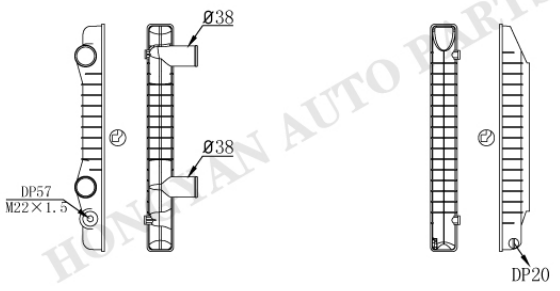

FI-0032

Tank size :(R9×5×5×50×427.7)
OEM :1301.JK 1307392080/3080
1330V9 1307393080
DPI :
NISSENS :61862
APPLICATION :
94- FIAT DUCATO 1.9L
94- CITROEN JUMPER 2.0L
94- CITROEN RELAY 2.0L
94- PEUGEOT BOXER 2.0L

FI-0031

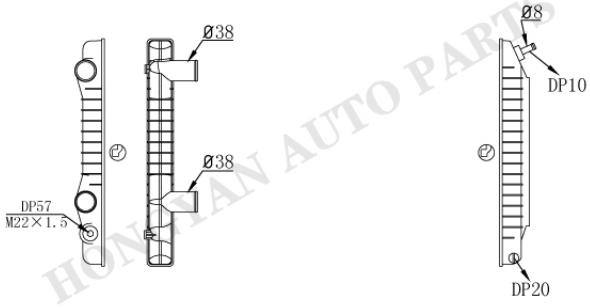

FI-0033

Tank size :(R9×5×5×50×427.7)
OEM :1330.L2 1331.RT 1333.48
1301.HQ/HS/NO/N2/N3/P6
DPI :
NISSENS :61390 61390A
APPLICATION :
94- FIAT DUCATO 1.9/2.0/2.5/2.8L
94- CITROEN JUMPER 1.9/2.0/2.5/2.8L
94- CITROEN RELAY 1.9/2.0/2.5/2.8L
94- PEUGEOT BOXER 1.9/2.0/2.5/2.8L

HONGYAN AUTO PARTS

FIAT

FI-0034

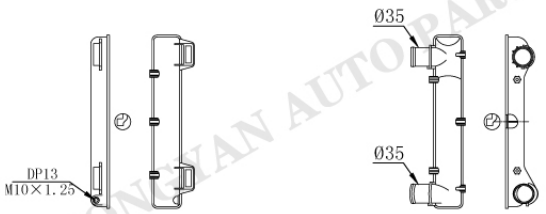

FI-0035

Tank size :(R9.5×5×5×55×324.5)
OEM :46546944 46778157
51708727
DPI :
NISSENS :61899
APPLICATION :
03- FIAT PUNTO II 1.8/1.9L

FI-0034

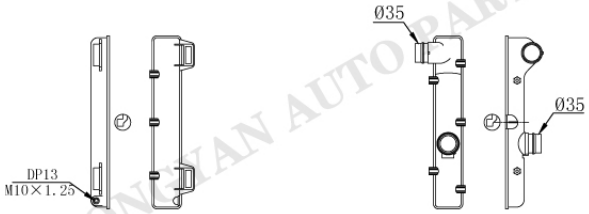

FI-0036

Tank size :(R9.5×5×5×55×324.5)
OEM :46739749
DPI :61887
NISSENS :
APPLICATION :
99- FIAT PUNTO II 1.9L

FI-0037

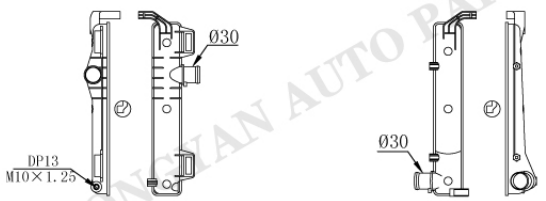

FI-0038

Tank size :(R9.5×5×5×55×324.5)
OEM :46834067 51708005
DPI :
NISSENS :61896 608806
APPLICATION :
03- FIAT PUNTO II 1.3
04- FIAT IDEA 1.3L
04- LANCIA MUSA 1.3L

FI-0039

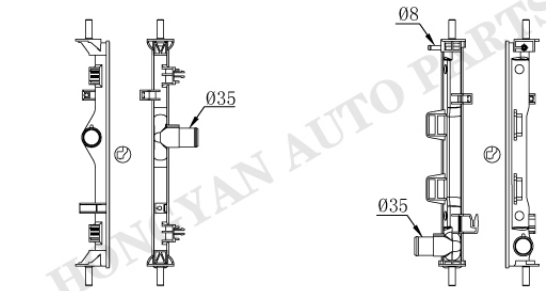

FI-0040

Tank size :(R9×4×6×31.5/40×425.8)
OEM :
DPI :
NISSENS :
APPLICATION :

HONGYAN AUTO PARTS

FIAT

FI-0041

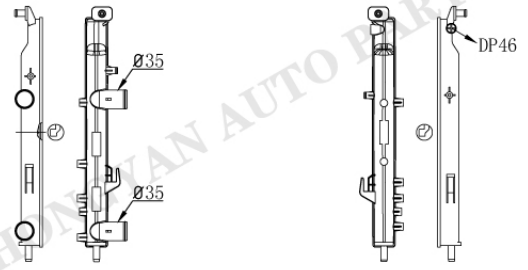

FI-0042

Tank size :(R5×4×4.5×42×432)
OEM :46779393 51791365
DPI :
NISSENS :61782
APPLICATION :
05- FIAT PALIO 1.0/1.2/1.4L
05- FIAT SIENA 1.2/1.4L

FI-0043

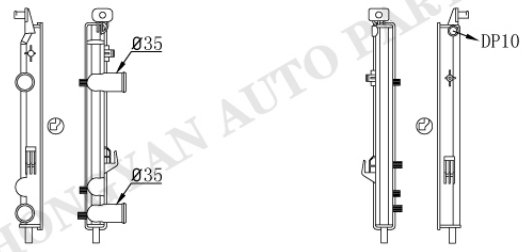

FI-0044

Tank size :(R4.5×4.5×4.5×41×389)
OEM :
DPI :
NISSENS :61782
APPLICATION :
05- FIAT PALIO 1.0/1.2/1.4L
05- FIAT SIENA 1.2/1.4L

FI-0045

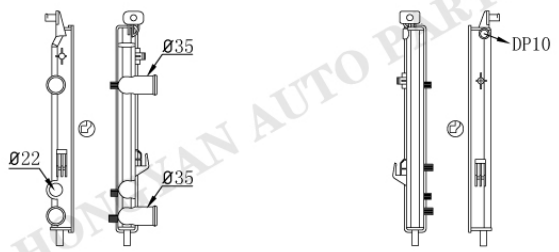

FI-0044

Tank size :(R4.5×4.5×4.5×41×389)
OEM :
DPI :
NISSENS :61782
APPLICATION :
05- FIAT PALIO 1.0/1.2/1.4L
05- FIAT SIENA 1.2/1.4L

FI-0046

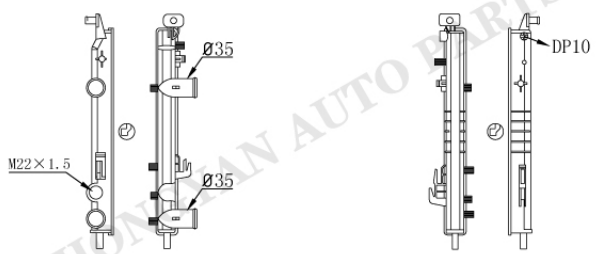

FI-0047

Tank size :(R4.5×4.5×4.5×41×389)
OEM :
DPI :
NISSENS :61782
APPLICATION :
05- FIAT PALIO 1.0/1.2/1.4L
05- FIAT SIENA 1.2/1.4L

HONGYAN AUTO PARTS

FIAT

FI-0048

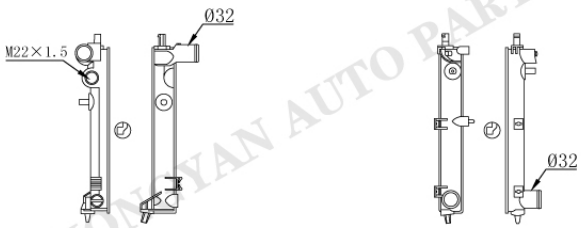

FI-0049

Tank size :(R7×4×5×44×311)
OEM :
DPI :
NISSENS :
APPLICATION :

FI-0050

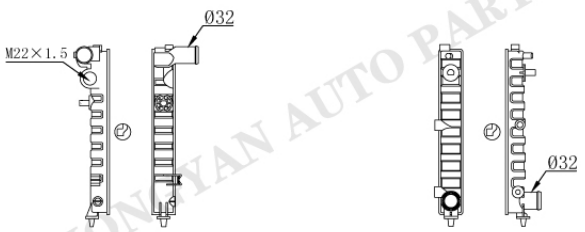

FI-0051

Tank size :(R7×4×5×44.5×311)
OEM :
DPI :
NISSENS :
APPLICATION :

FI-0052



FI-0053

Tank size :(R5.5×4×6×47×285)
OEM :46558704
DPI :
NISSENS :61785
APPLICATION :
98- FIAT SEICENTO 1.1L

FI-0054

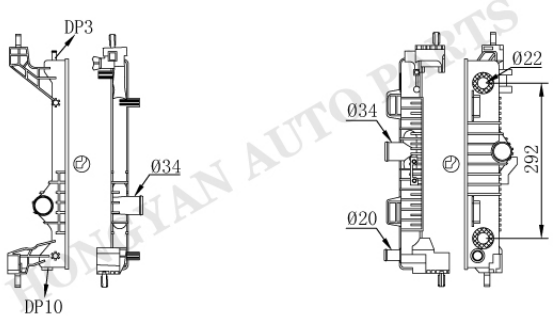

FI-0055AT/MT

Tank size :(R9.5×4.1×5×32.5/41.8×394.5)
OEM :
DPI :
NISSENS :
APPLICATION :

HONGYAN AUTO PARTS

FI-8

FIAT

FI-0056

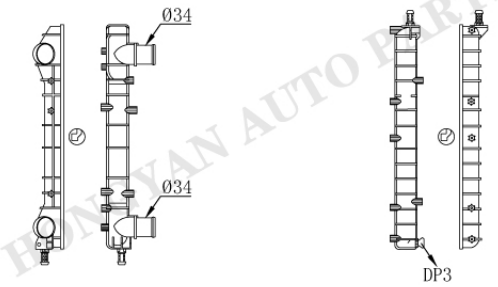

FI-0057

Tank size :(R9.5×4.5×4.7×41.5×420.6)
OEM :46749018 46803035 51867711
46767293 51779235/2
DPI :61766
NISSENS :
APPLICATION :
01- FIAT DOBLO 1.4/1.6/1.9L

FI-0058

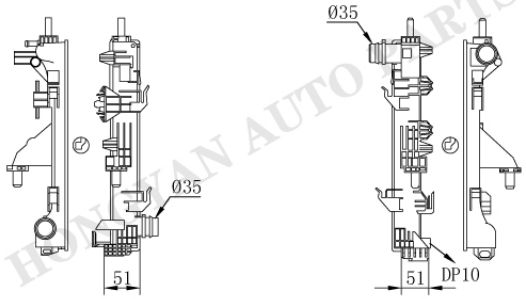

FI-0059

Tank size :(R5.5×4×5.5×55.5×394.5)
OEM :1330.Q3/S3/Z4 1333E5
1342588080 1342688080
DPI :
NISSENS :63555A
APPLICATION :
06- FIAT DUCATO 2.2/2.3/3.0L
06- PEUGEOT BOXER 2.2/3.0L
06- CITROEN JUMPER 2.2/3.0L
06- CITROEN RELAY 2.2/3.0L

FI-0060

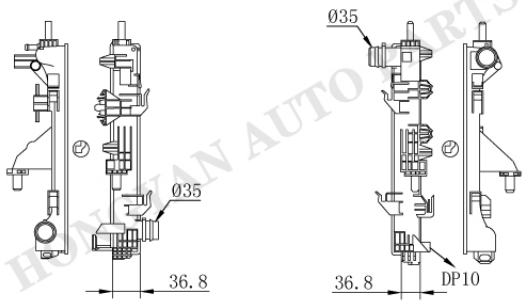

FI-0061

Tank size :(R5.5×4×5.5×55.5×394.5)
OEM :330.Q2 1340359080 1349196080
1349207080 3062308080
DPI :
NISSENS :63556
APPLICATION :
06- FIAT DUCATO 2.3/3.0L

FI-0062

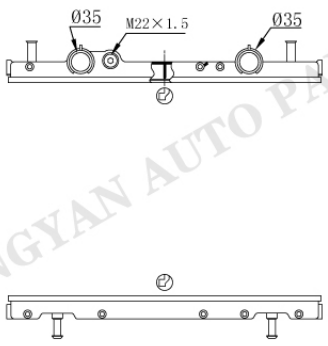

FI-0063

Tank size :(R7×5×5×60×586.5)
OEM :46405919 46480707 46547096
46772231 46782685 71736178
DPI :
NISSENS :61792A
APPLICATION :
95- FIAT BRAVA 1.9L
96- FIAT MAREA 1.9L

HONGYAN AUTO PARTS

FIAT

FI-0064

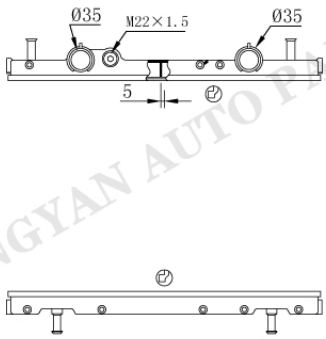

FI-0063

Tank size :(R7×5×5×60×586.5)
OEM :46405919 46480707 46547096
46772231 46782685 71736178
DPI :
NISSENS :61792A
APPLICATION :
95- FIAT BRAVA 1.9L
96- FIAT MAREA 1.9L

FI-0065

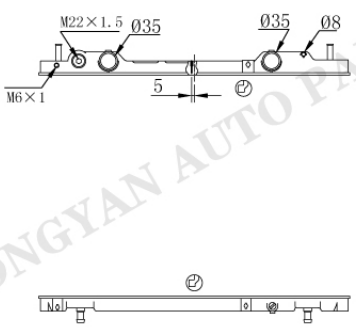

FI-0066

Tank size :(R9.5×4.5×4.5×48.5×583.5)
OEM :46404163 46759742 7767438
7794069 71736184
DPI :
NISSENS :61672A
APPLICATION :
95- FIAT BRAVA 1.4/1.8/1.9L
95- FIAT BRAVO 1.4/1.8/1.9/2.0L
98- FIAT MULTIPLA 1.9L

FI-0067

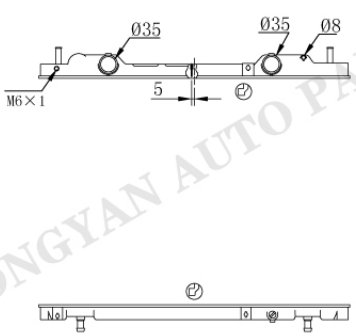

FI-0066

Tank size :(R9.5×4.5×4.5×48.5×583.5)
OEM :
DPI :
NISSENS :
APPLICATION :
95- FIAT BRAVA 1.4/1.8/1.9L
95- FIAT BRAVO 1.4/1.8/1.9/2.0L
98- FIAT MULTIPLA 1.9L

FI-0068

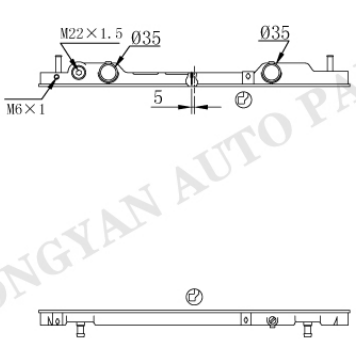

FI-0066

Tank size :(R9.5×4.5×4.5×48.5×583.5)
OEM :
DPI :
NISSENS :
APPLICATION :
95- FIAT BRAVA 1.4/1.8/1.9L
95- FIAT BRAVO 1.4/1.8/1.9/2.0L
98- FIAT MULTIPLA 1.9L

HONGYAN AUTO PARTS

FI-0069

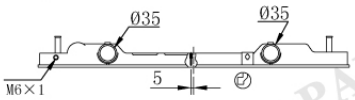



FI-0066

Tank size :(R9.5×4.5×4.5×48.5×583.5)
OEM :
DPI :
NISSENS :
APPLICATION :
95- FIAT BRAVA 1.4/1.8/1.9L
95- FIAT BRAVO 1.4/1.8/1.9/2.0L
98- FIAT MULTIPLA 1.9L

FI-0070

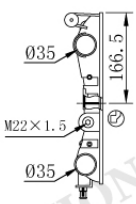



FI-0071

Tank size :(R7×4×4.8×44×322)
OEM :6466627 71735351/66
71736188 7718669
DPI :
NISSENS :618121
APPLICATION :
93- FIAT PUNTO I 1.7L

FI-0072

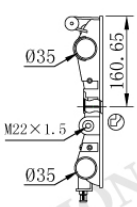



FI-0071

Tank size :(R7×4×4.8×44×322)
OEM :6466627 71735351/66
71736188 7718669
DPI :
NISSENS :618121
APPLICATION :
93- FIAT PUNTO I 1.7L

FI-0073

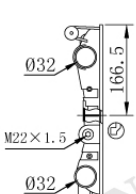

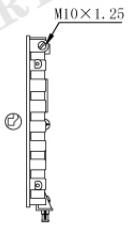

FI-0074

Tank size :(R7×4×4.8×44×322)
OEM :7721579 71735367
DPI :
NISSENS :61859
APPLICATION :
93- FIAT PUNTO I 1.4L

HONGYAN AUTO PARTS

FIAT

FI-0075



FI-0074

Tank size :(R7×4×4.8×44×322)
OEM :7721579 71735367
DPI :
NISSENS :61859
APPLICATION :
93- FIAT PUNTO I 1.4L

FI-0076

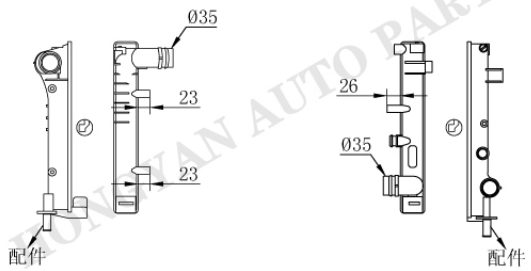

FI-0077

Tank size :(R7×4×4.8×44×322)
OEM :51773192 51759806 51729373
46798743 71738390
DPI :
NISSENS :617846 617847
APPLICATION :
03- FIAT PANDA 1.2L

FI-0078

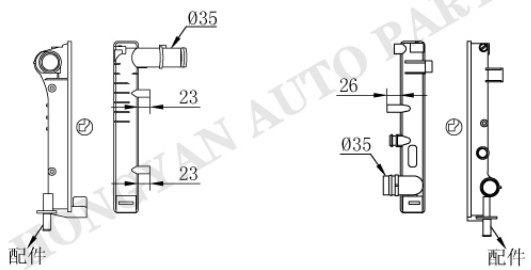

FI-0077

Tank size :(R7×4×4.8×44×322)
OEM :
DPI :
NISSENS :
APPLICATION :
03- FIAT PANDA 1.2L

FI-0079

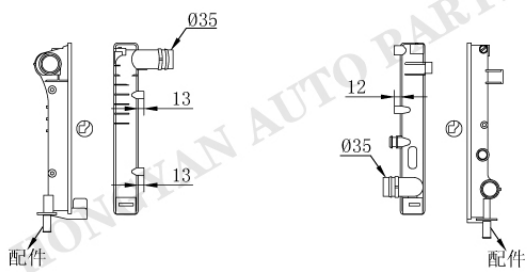

FI-0080

Tank size :(R7×4×4.8×44×322)
OEM :
DPI :
NISSENS :
APPLICATION :
03- FIAT PANDA 1.2L

FI-12

HONGYAN AUTO PARTS

FIAT

FI-0081

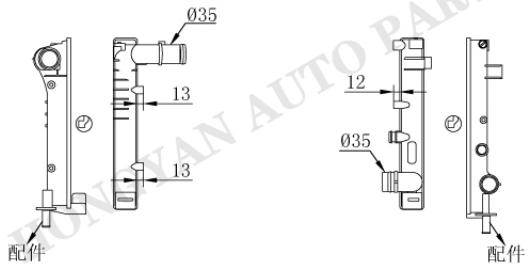

FI-0080

Tank size :(R7×4×4.8×44×322)
OEM :
DPI :
NISSENS :
APPLICATION :
03- FIAT PANDA 1.2L

FI-0082



FI-0083

Tank size :(R5×4×5.5×47.5×359.5)
OEM :7572592
DPI :
NISSENS :61922
APPLICATION :
83- FIAT RITMO 1.5L

FI-0084



FI-0085

Tank size :(R7×4.5×4.5×47×420)
OEM :51785217 51852517
59116448 51898955
DPI :
NISSENS :61694
APPLICATION :
07- FIAT LINEA 1.3/1.4/1.6L

FI-0086

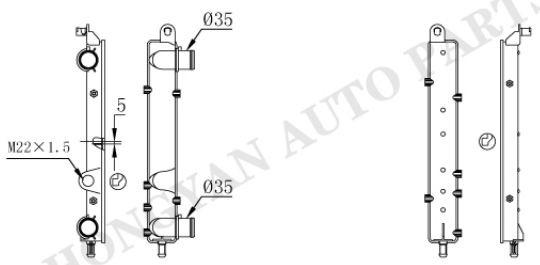

FI-0087

Tank size :(R10×6×5×55.8×381.4)
OEM :
DPI :
NISSENS :
APPLICATION :
09- FIAT PALIO

HONGYAN AUTO PARTS

FI-13

FIAT

FI-0088

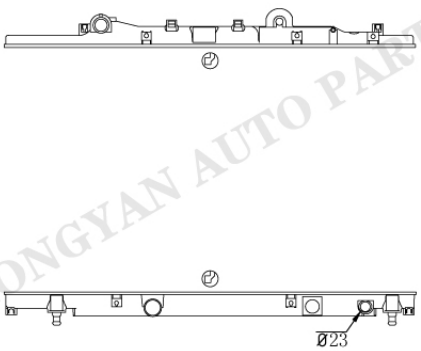

FI-0089

Tank size :(R9×4×4.5×33/40×775)
OEM :7783504
DPI :
NISSENS :61798
APPLICATION :
93- FIAT PUNTO 1.6L

FI-0090

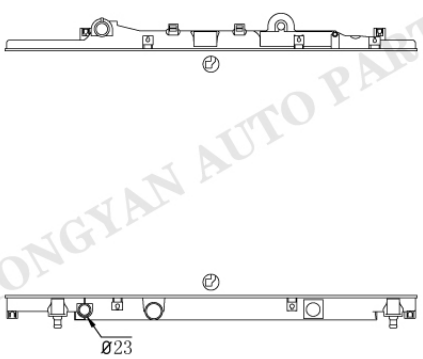

FI-0091

Tank size :(R9×4×4.5×33/40×775)
OEM :7794871 46723325
DPI :
NISSENS :68805 61797
APPLICATION :
93- FIAT PUNTO 1.2L

FI-0092

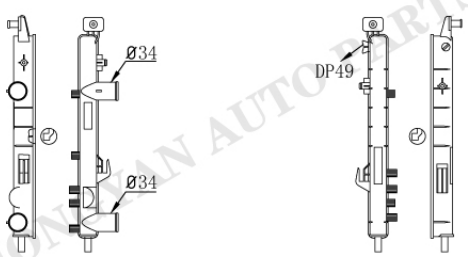

FI-0093

Tank size :(R10×4×5×37×383)
OEM :
DPI :
NISSENS :
APPLICATION :
FIAT

FI-0094

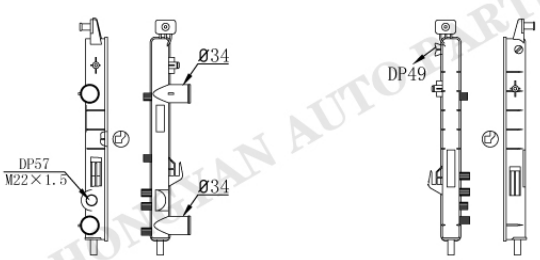

FI-0093

Tank size :(R10×4×5×37×383)
OEM :
DPI :
NISSENS :
APPLICATION :
FIAT

HONGYAN AUTO PARTS

FI-14

FIAT

FI-0095

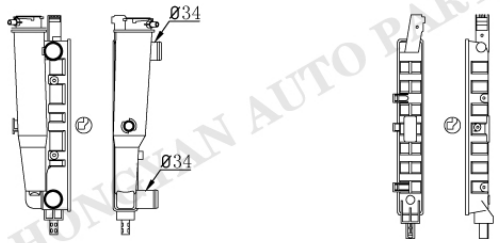

FI-0096

Tank size :(R6×4×4.5×47×322.5)
OEM :7558136
DPI :
NISSENS :61930
APPLICATION :
83-89 FIAT UNO

FI-0097

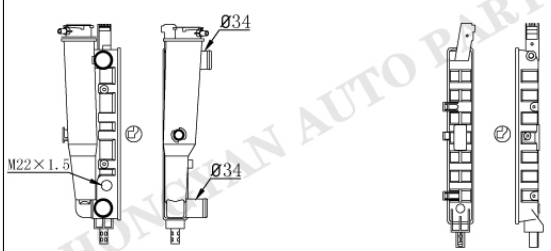

FI-0098

Tank size :(R6×4×4.5×47×322.5)
OEM :
DPI :
NISSENS :
APPLICATION :
83-89 FIAT UNO

FI-0099

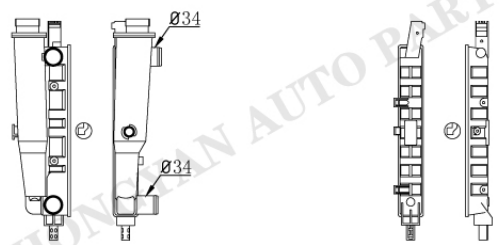

FI-0096

Tank size :(R6×4×4.5×47×322.5)
OEM :
DPI :
NISSENS :
APPLICATION :
83-89 FIAT UNO

FI-0100

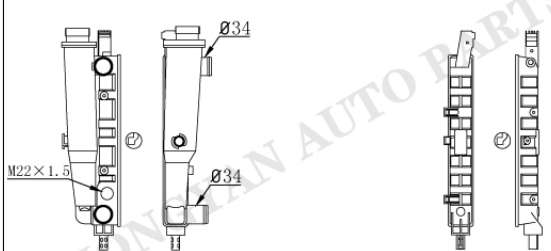

FI-0098

Tank size :(R6×4×4.5×47×322.5)
OEM :
DPI :
NISSENS :
APPLICATION :
83-89 FIAT UNO

HONGHAN AUTO PARTS

FIAT

FI-0101

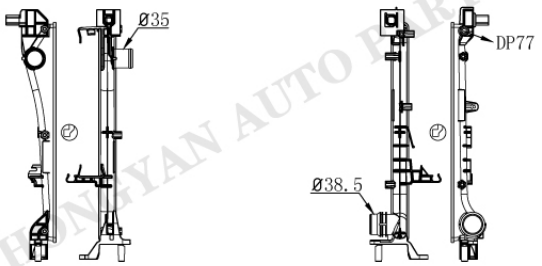

FI-0102

Tank size :(R9.5×4.2×5×33×414)
OEM :52052220
DPI :
NISSENS :
APPLICATION :
15- FIAT EGEA 1.3L/ 15- FIAT TIPO 1.3L

FI-0103

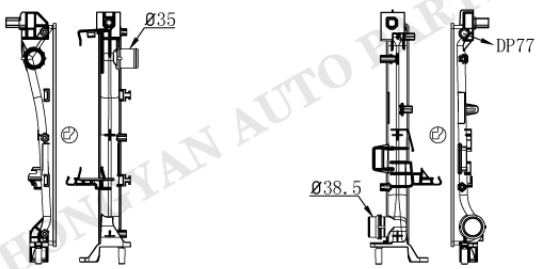

FI-0104

Tank size :(R9.5×4.2×5×42×420)
OEM :52052630
DPI :
NISSENS :
APPLICATION :
15- FIAT EGEA 1.3L
15- FIAT TIPO 1.3L

FI-0105



FI-0106

Tank size :(60×387)
OEM :46440541/46453389
DPI :61804
NISSENS :
APPLICATION :
98-00 FIAT PALIO 1.7L

FI-0107

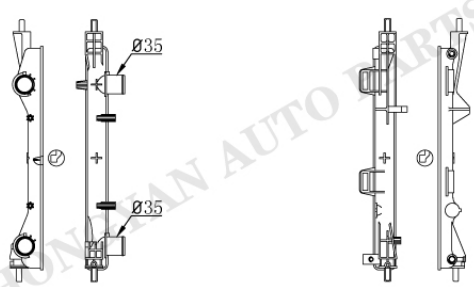

FI-0108

Tank size :(R10×4×5×42×420.5)
OEM :
DPI :
NISSENS :
APPLICATION :

HONGYAN AUTO PARTS

FI-16

FI-0107

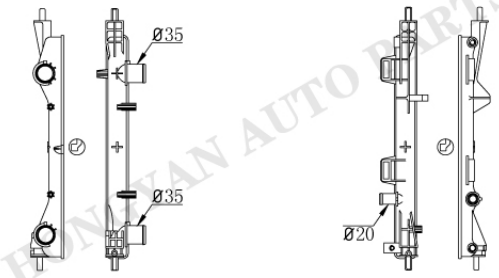

FI-0109

Tank size :(R10×4×5×42×420.5)
OEM :
DPI :
NISSENS :
APPLICATION :

FI-0110

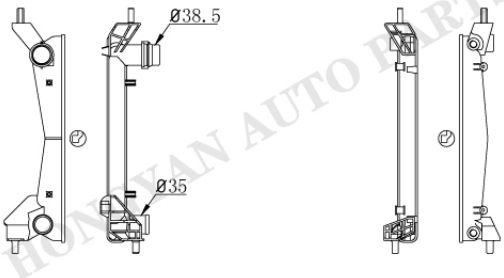

FI-0111

Tank size : (R12×4.2×5.5×37.3×391)
OEM :51851016
DPI :
NISSENS :
APPLICATION :

FI-0112

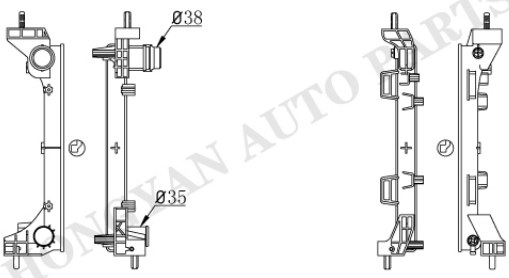

FI-0113

Tank size : (R12×3.7×5×37.5×389.8)
OEM :
DPI :
NISSENS :
APPLICATION :

FI-0114

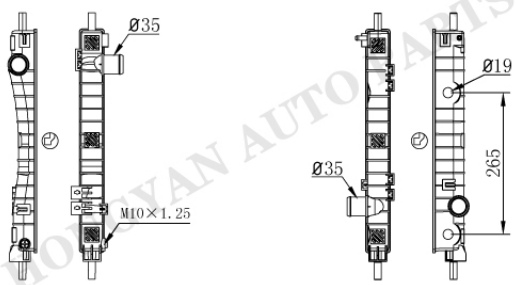

FI-0115AT/MT

Tank size :(R6×5×5×48×420)
OEM :
DPI :
NISSENS :
APPLICATION :
FIAT 4.8L

FI:17

FIAT

FI-0116

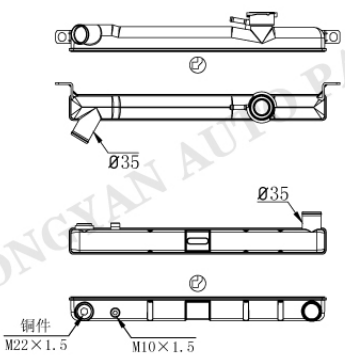

FI-0117

Tank size : (R8×4.3×4×48×483)
OEM :
DPI :
NISSENS :
APPLICATION :
77-84 FIAT 1.3/1.4/1.6/2.0L

FI-0118

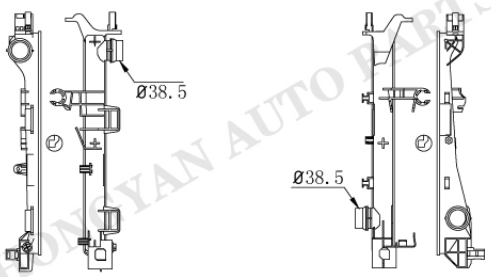

FI-0119

Tank size :(R9.5×4×5×42×420)
OEM :51888085 K51888085
DPI :
NISSENS :617869
APPLICATION :
12- FIAT 500 1.6L

Tank size :
OEM :
DPI :
NISSENS :
APPLICATION :

Tank size :
OEM :
DPI :
NISSENS :
APPLICATION :

HONGYAN AUTO PARTS

	Tank size : OEM : DPI : NISSENS : APPLICATION :
	Tank size : OEM : DPI : NISSENS : APPLICATION :
	Tank size : OEM : DPI : NISSENS : APPLICATION :
	Tank size : OEM : DPI : NISSENS : APPLICATION :

HONGYAN AUTO PARTS

FIAT

	Tank size : OEM : DPI : NISSENS : APPLICATION :
	Tank size : OEM : DPI : NISSENS : APPLICATION :
	Tank size : OEM : DPI : NISSENS : APPLICATION :
	Tank size : OEM : DPI : NISSENS : APPLICATION :

HONGYAN AUTO PARTS

FORD/LINCOLN/MERCURY

FO-0001AT/MT

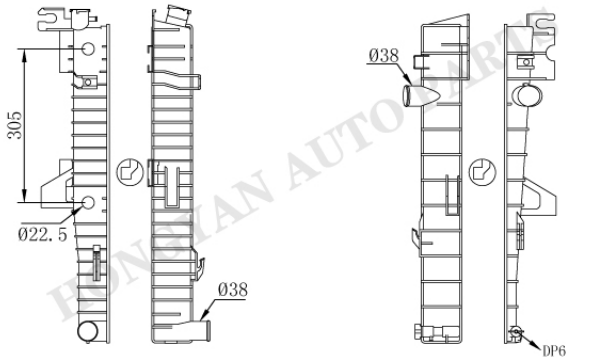

FO-0002

Tank size :(R7X5X5X77X604)
OEM :F67H8005AA/XL2Z8005LA
DPI :1824 2308
NISSENS :69204
APPLICATION :
96-99 FORD EXPLORER 5.0L
97-99 MERCURY MOUNTAINEER 5.0L

FO-0003AT/MT

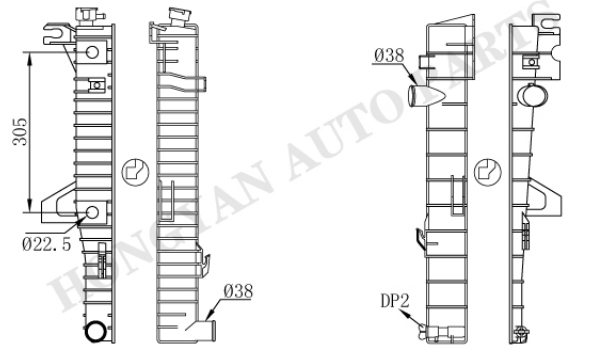

FO-0004

Tank size :(R7×5×5×77×604)
OEM :1L5Z8005MA
DPI :2174 2309 2310
NISSENS :69203
APPLICATION :
96-99 FORD EXPLORER 4.0L
97-99 MERCURY MOUNTAINEER 4.0L

FO-0003-1AT/MT

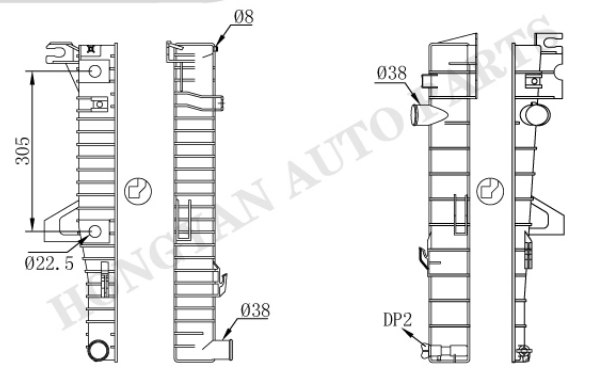

FO-0004

Tank size :(R7×5×5×77×604)
OEM :4219903 4603786
DPI :2470
NISSENS :69229
APPLICATION :
01-12 FORD RANGER 2.3L
01-10 MAZDA B2300 2.3L

FO-0005

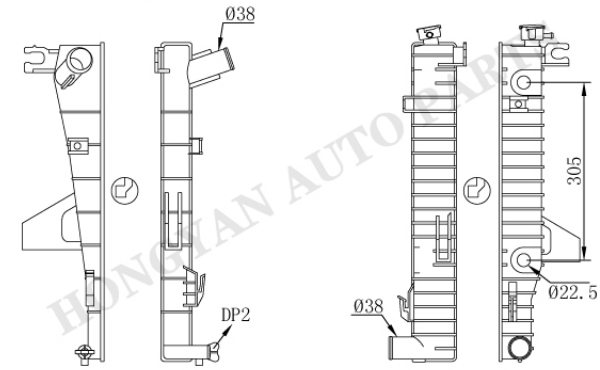

FO-0006AT/MT

Tank size :(R7×5×5×46.5/77×548)
OEM :F87Z8005GA
DPI :2172
NISSENS :
APPLICATION :
98-01 FORD RANGER 2.5L
98-01 MAZDA B2300 2.5L

HONGYAN AUTO PARTS

FORD/LINCOLN/MERCURY

FO-0007

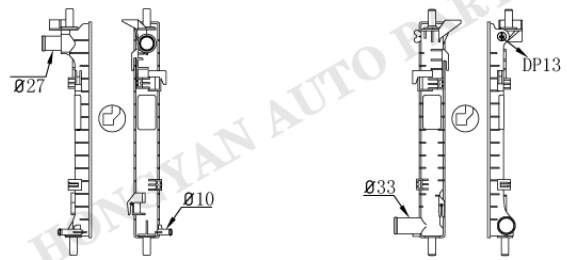

FO-0008

Tank size :(R6×5×5×48×405)
OEM :3M218005AB
DPI :
NISSENS :
APPLICATION :

FO-0009

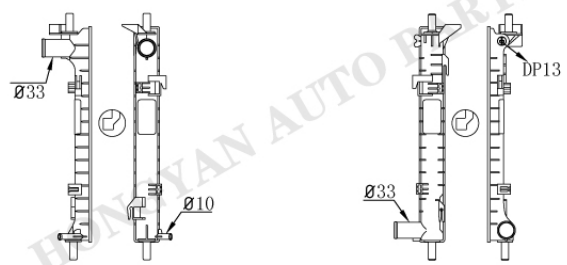

FO-0008

Tank size :(R6×5×5×48×405)
OEM :
DPI :
NISSENS :
APPLICATION :

FO-0009-1

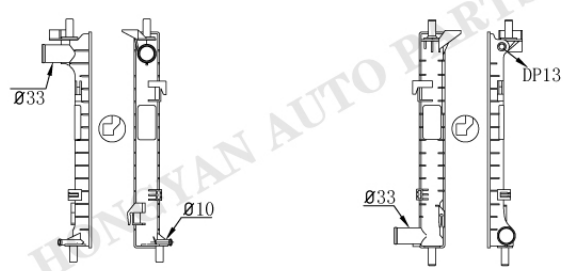

FO-0008-1

Tank size :(R6×5×5×48×405)
OEM :
DPI :
NISSENS :
APPLICATION :

FO-0010

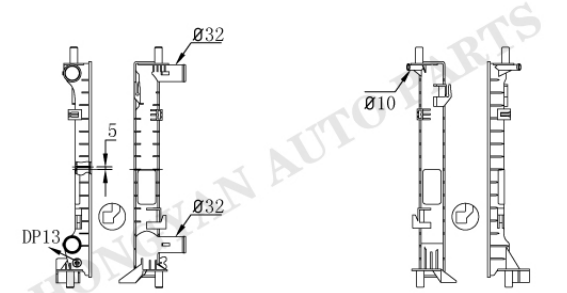

FO-0011

Tank size :(R6×5×5×48×405)
OEM :
DPI :
NISSENS :
APPLICATION :

HONGYAN AUTO PARTS

FORD/LINCOLN/MERCURY

FO-0012

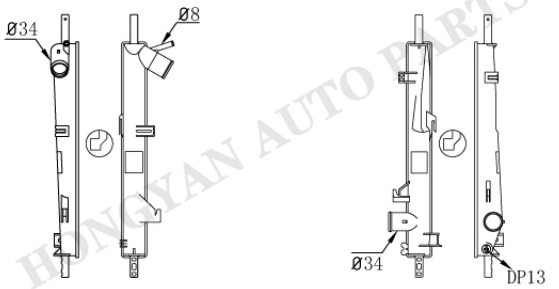

FO-0013

Tank size :(R6×5×5×48×405)
OEM :1142808 1114764 1115770
DPI :
NISSENS :620411
APPLICATION :
00- FORD MONDEO 1.8/2.0L

FO-0014

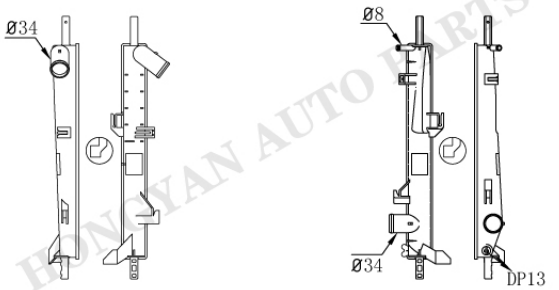

FO-0015

Tank size :(R6×5×5×5×405)
OEM :
DPI :
NISSENS :62056A 69251
APPLICATION :
92- FORD MONDEO 1.8/2.5L
98- FORD COUGAR 2.0/2.5L

FO-0014

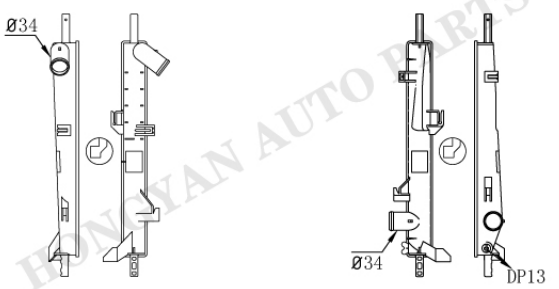

FO-0015-1

Tank size :(R6×5×5×5×405)
OEM :
DPI :
NISSENS :
APPLICATION :

FO-0016

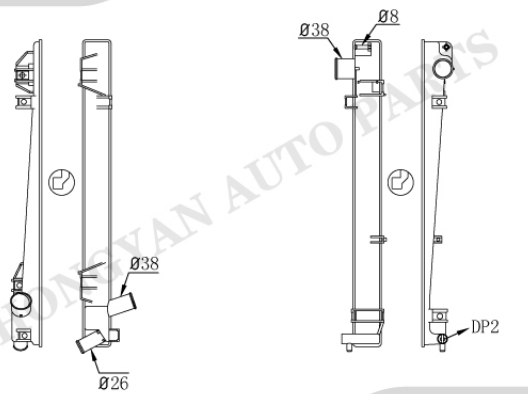

FO-0017

Tank size :(R7×5×5×56.5×609)
OEM :3L2Z8005ZZ IL2Z8005DC
DPI :2342
NISSENS :
APPLICATION :
02-05 FORD EXPLORER 4.0/4.6L
02-05 MERCURY MOUNTAINEER 4.0/4.6L

HONGYAN AUTO PARTS

FO-3

FORD/LINCOLN/MERCURY

FO-0018

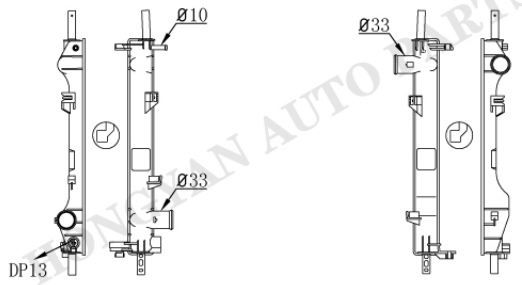

FO-0019

Tank size :(R6×5×5×48×405)
OEM :1103120/4320/3204/3206
DPI :
NISSENS :62043A
APPLICATION :
00- FORD TRANSIT 2.3/2.4L

FO-0020

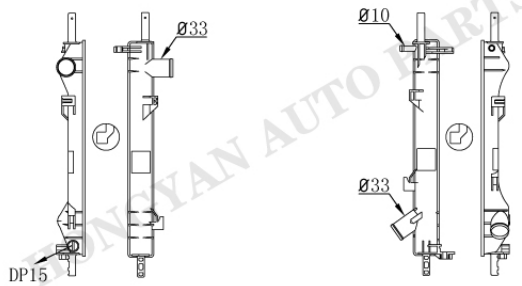

FO-0021

Tank size :(R6×5×5×48×405)
OEM :4084418 4104714 1671800
DPI :
NISSENS :62046A
APPLICATION :
00- FORD TRANSIT 2.0L

FO-0022

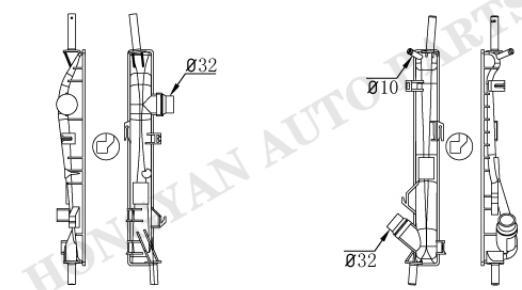

FO-0023

Tank size :(R6×5×5×48×405)
OEM :
DPI :
NISSENS :
APPLICATION :

FO-0024

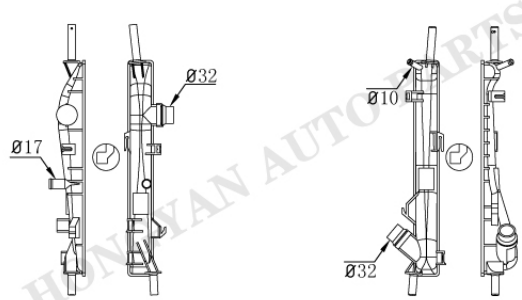

FO-0023

Tank size :(R6×5×5×48×405)
OEM :1216264 1315633
DPI :
NISSENS :62023A
APPLICATION :
00- FORD MONDEO 2.0L

FORD/LINCOLN/MERCURY

FO-0025

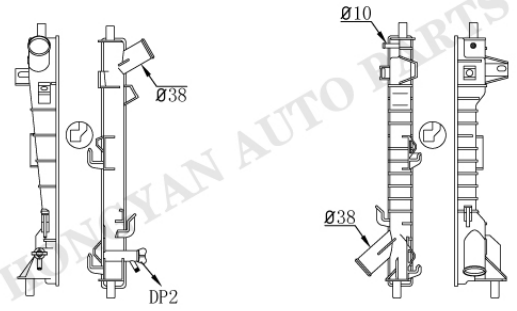

FO-0026

Tank size :(R6.5×5×5×46×469)
OEM :F8VZ8005BA F8VH8005AE/BA
DPI :2157
NISSENS :62033
APPLICATION :
98-04 FORD CROWN VICTORIA 4.6L
98-04 FORD GRAND MARQUIS 4.6L
04-05 LINCOLN TOWN CAR 4.6L

FO-0027

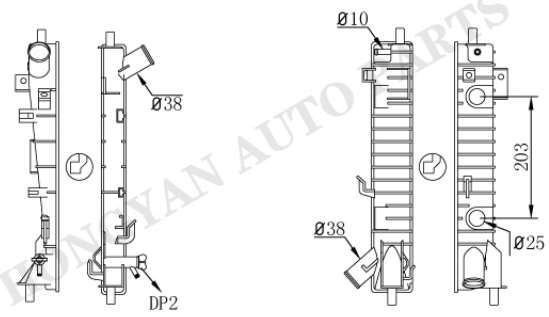

FO-0028AT/MT

Tank size :(R6.5×5×5×46/77×469)
OEM :F5VH8005AB/AC/BB/BC/BD
DPI :1737
NISSENS :62046A
APPLICATION :
95-97 FORD CROWN VICTORIA 4.6L
95-97 FORD GRAND MARQUIS 4.6L
95-97 LINCOLN TOWN CAR 4.6L

FO-0029

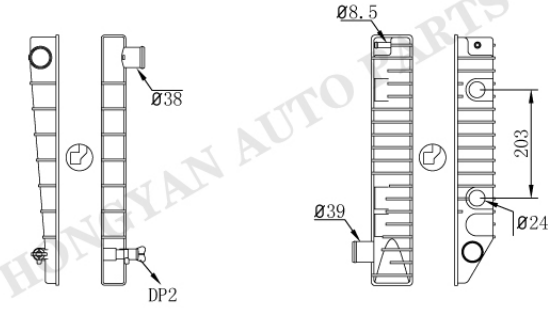

FO-0030AT/MT

Tank size :(R6.5×5×5×46/77×469)
OEM :F3AH8005AB/Z8005A
DPI :1279
NISSENS :62031A
APPLICATION :
92-94 FORD CROWN VICTORIA 4.6L
92-94 MERCURY GRAND MARQUIS 4.6L
92-94 LINCOLN TOWN CAR 4.6L

FO-0031

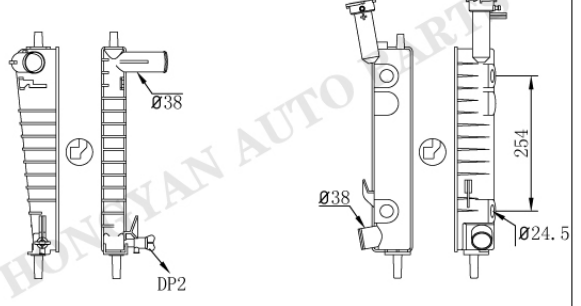

FO-0032AT/MT

Tank size :(R9×5×5×46/76×383)
OEM :E6DA8005EC E7DH8005AA
DPI :1094 1163 1458
NISSENS :62065
APPLICATION :
88-95 FORD TAURUS 3.0/3.8L
88-94 LINCOLN CONTINENTAL 3.8L
88-95 MERCURY SABLE 3.0/3.8L

HONGYAN AUTO PARTS

FORD/LINCOLN/MERCURY

FO-0033

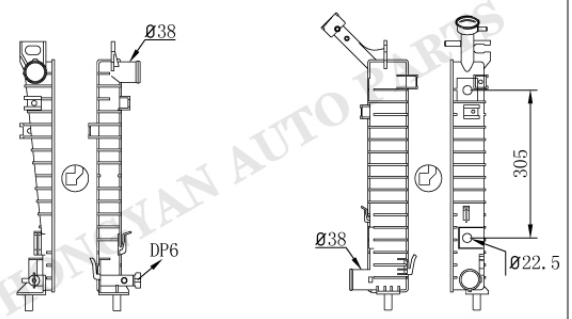

FO-0034AT/MT

Tank size :(R6.5×5×5×46/77×436)
OEM :F58H8005CA/DA F58Z8005A
F78Z8005AA
DPI :1609
NISSENS :62068A
APPLICATION :
95-98 FORD WINDSTAR 3.0/3.8L

FO-0033

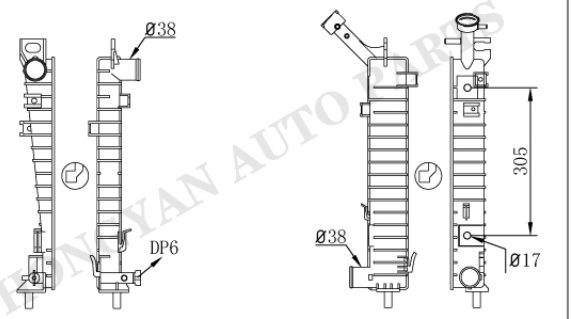

FO-0034-1AT

Tank size :(R6.5×5×5×46/77×436)
OEM :
DPI :1609
NISSENS :
APPLICATION :
95-98 FORD WINDSTAR 3.0/3.8L

FO-0035AT/MT

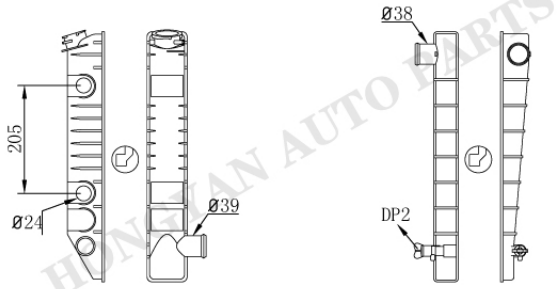

FO-0036

Tank size :(R6.5×5×5×46×469)
OEM :F0VY8005A/B
F0VH8005AA/BA
DPI :227
NISSENS :
APPLICATION :
87-91 FORD COUNTRY SQUIRE 5.0L
87-91 FORD LTDCROWN BICTORIA 5.0L
86-90 LINCOLN TOWN CAR 5.0L
86-91 MERCRY GRAND MARQUIS 5.0L
86-91 MERCRY COLONY PARK 5.0L

FO-0037

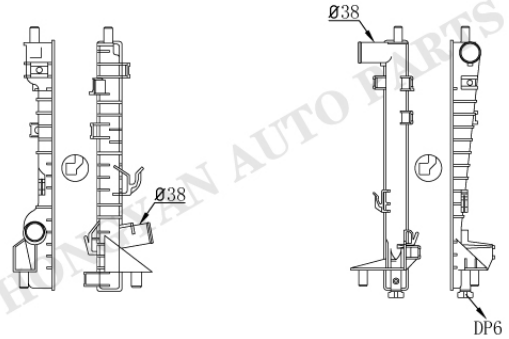

FO-0038

Tank size :(R6.5×5×5×46×469)
OEM :XR8002935
DPI :2256
NISSENS :
APPLICATION :
02-05 FORD THUNDERBIRD 3.9L
00-09 JAGUAR S-TYPE 3.0/4.0/4.2L
00-09 JAGUAR SUPER V8 3.0/4.0/4.2L
00-06 LINCOLN LS 3.0/3.9L

HONGYAN AUTO PARTS

FORD/LINCOLN/MERCURY

FO-0039

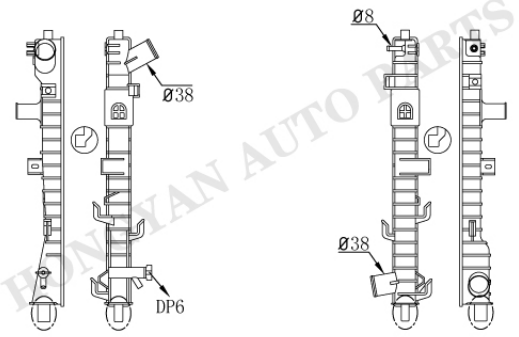

FO-0040

Tank size :(R6.5×5×5×46×503)
OEM :3W1H8005AF/G
DPI :2610
NISSENS :
APPLICATION :
03-05 FORD CROWN RICTORIA 4.6L
03-05 LINCOLN TOWN CAR 4.6L
03-05 MERCURY GRAND MARQUS 4.6L

FO-0039-1

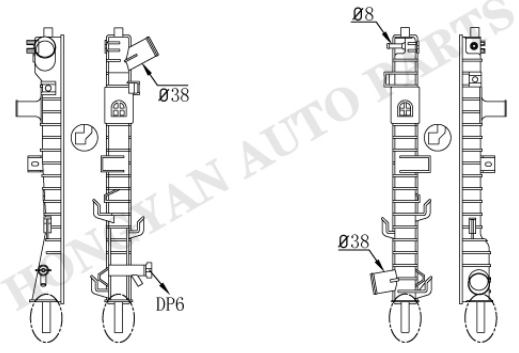

FO-0040-1

Tank size :(R6.5×5×5×46×503)
OEM :
DPI :
NISSENS :
APPLICATION :
03-05 FORD CROWN RICTORIA 4.6L
03-05 LINCOLN TOWN CAR 4.6L
03-05 MERCURY GRAND MARQUS 4.6L

FO-0041AT/MT

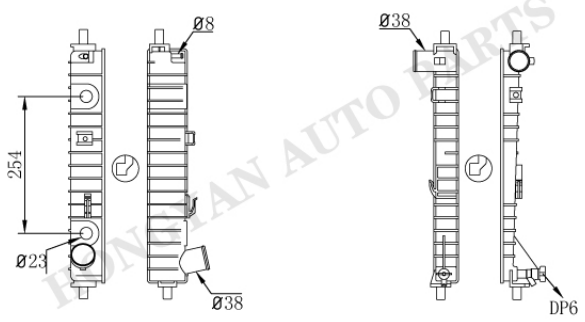

FO-0042

Tank size :(R6.5×5×5×76/46×436)
OEM :1R3H8005AA 1R3Z8005AA
DPI :2139
NISSENS :
APPLICATION :
97-04 FORD MUSTANG 4.6L

FO-0043

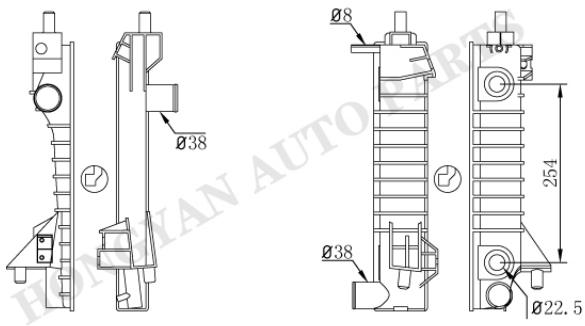

FO-0044AT/MT

Tank size :(R6.5×5×5×46/76×383)
OEM :F6DZ8005A
DPI :1830
NISSENS :
APPLICATION :
96-07 FORD RAURUS 3.0L
96-05 MERCURY SABLE 3.0L

HONGYAN AUTO PARTS

FORD/LINCOLN/MERCURY

FO-0045

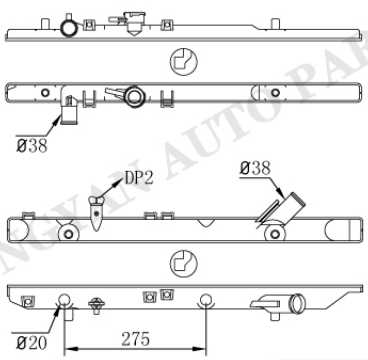

FO-0046AT/MT

Tank size : (R8×5×4×36/47×669)
OEM : F4BZ005A/B
DPI :1626
NISSENS :
APPLICATION :
94-97 FORD ASPIRE 1.3L

FO-0047

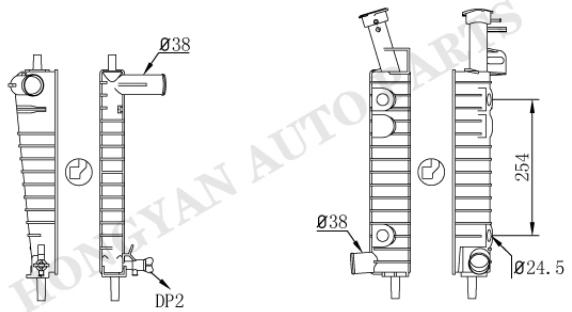

FO-0048AT/MT

Tank size : (R9×5×5×46/76×383)
OEM :
DPI :
NISSENS :
APPLICATION :
88-95 FORD TAURUS 3.0/3.8L
88-94 LINCOLN CONTINENTAL 3.8L
88-95 MERCURY SABLE 3.8L

FO-0049

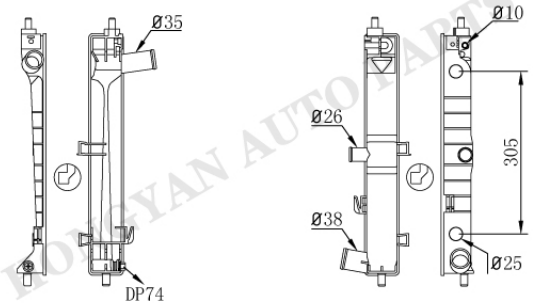

FO-0050AT/MT

Tank size : (R8×5×5.5×65×454)
OEM :
DPI :
NISSENS :
APPLICATION :

FO-0051AT/MT

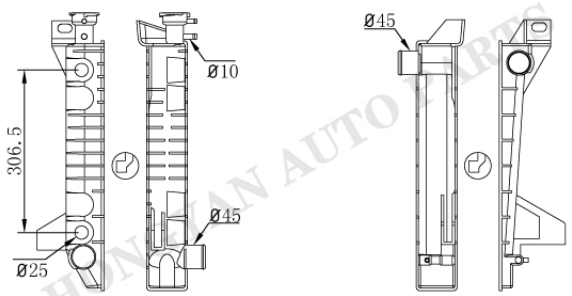

FO-0052

Tank size : (R6.5×5×5×77×470)
OEM :52470841 52479539
DPI :1451
NISSENS :
APPLICATION :
85-87 FORD F150/250/350 5.0/5.8/7.0L

HONGYAN AUTO PARTS

FORD/LINCOLN/MERCURY

FO-0053

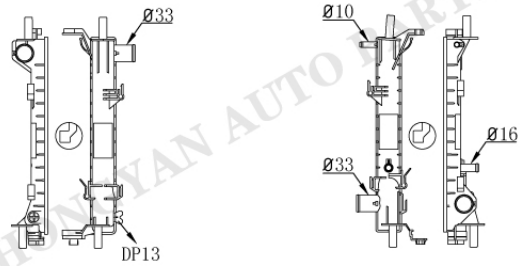

FO-0054

Tank size :(R6×5×5×48.5×366.5)
OEM :YS4Z8005BB
DPI :2296
NISSENS :
APPLICATION :
00-07 FORD FOCUS 2.0L

FO-0053

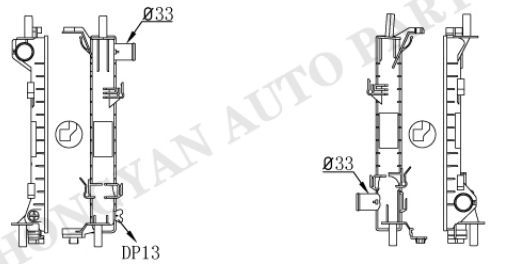

FO-0054-1

Tank size :(R6×5×5×48.5×366.5)
OEM :
DPI :
NISSENS :
APPLICATION :
00-07 FORD FOCUS 2.0L

FO-0055

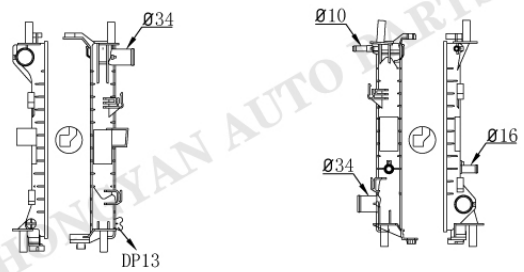

FO-0056

Tank size :(R6×5×5×48.5×366.5)
OEM :YS4Z8005AA
DPI :2297
NISSENS :62075A
APPLICATION :
00-07 FORD FOCUS 1.4/1.6/1.8L

FO-0055

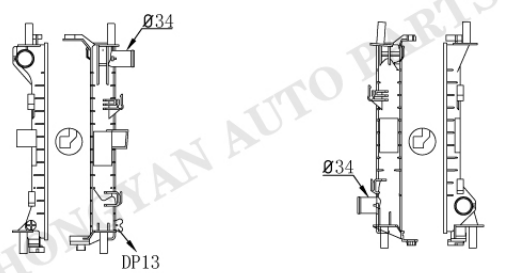

FO-0056-1

Tank size :(R6×5×5×48.5×366.5)
OEM :
DPI :
NISSENS :
APPLICATION :
00-07 FORD FOCUS 1.4/1.6/1.8L

HONGYAN AUTO PARTS

FORD/LINCOLN/MERCURY

FO-0057

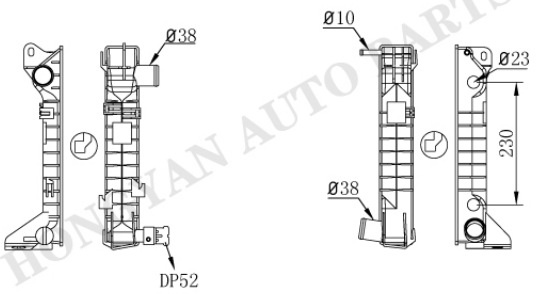

FO-0058AT/MT

Tank size :(R7×5×5×63×372.5)
OEM :112703 7045713 7242485
DPI :62057A
NISSENS :
APPLICATION :
94- FORD TRANSIT 2.5L

FO-0057

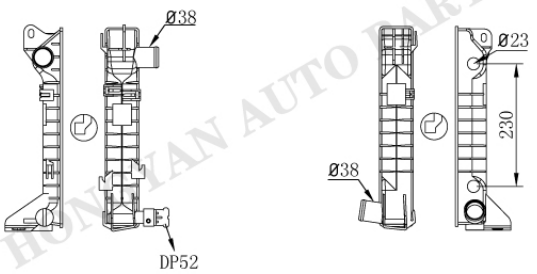

FO-0058-1AT/MT

Tank size :(R7×5×5×63×372.5)
OEM :
DPI :
NISSENS :
APPLICATION :
94- FORD TRANSIT 2.5L

FO-0059

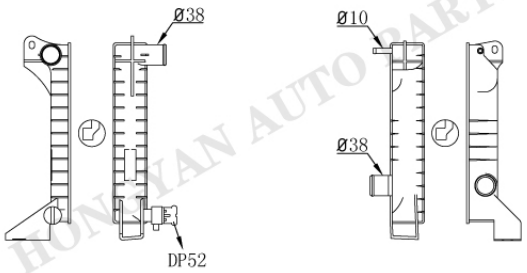

FO-0060

Tank size :(R5.5×5×5×64×339)
OEM :104007 6640239/40/41/42
DPI :62177
NISSENS :
APPLICATION :
92- FORD TRANSIT 2.0/2.5L

FO-0061

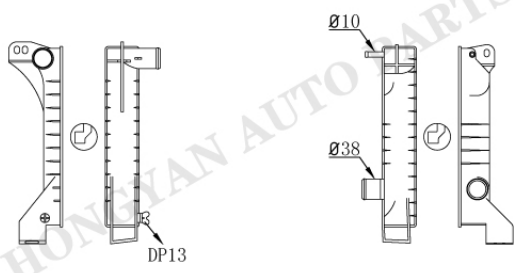

FO-0060

Tank size :(R5.5×5×5×64×339)
OEM :
DPI :
NISSENS :
APPLICATION :
92- FORD TRANSIT 2.0/2.5L

HONGYAN AUTO PARTS

FORD/LINCOLN/MERCURY

FO-0062

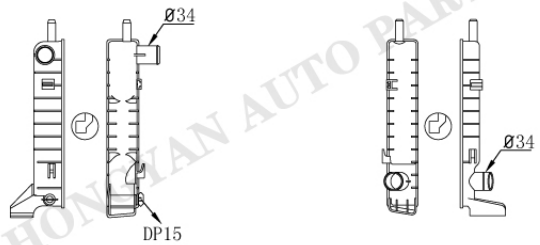

FO-0063

Tank size :(R5.5×4×5×60×316)
OEM :1643536/41 6148703/4
DPI :
NISSENS :62154
APPLICATION :
86-90 FORD ESCORT 1.4/1.6L
86-90 FORD ORION 1.4/1.6L

FO-0064AT/MT

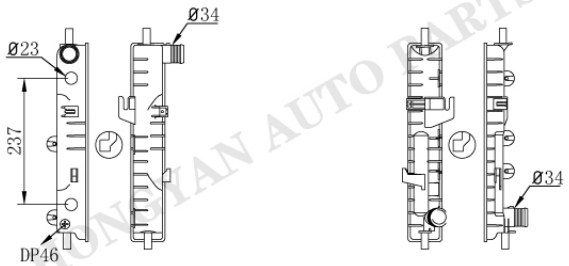

FO-0065

Tank size :(R7×5×5×63×373)
OEM :1029459 1664029/38/39/47
DPI :
NISSENS :62164A
APPLICATION :
90-95 FORD ESCORT 1.8L

FO-0064AT/MT

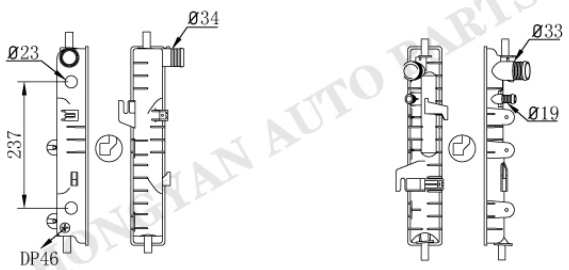

FO-0066

Tank size :(R7×5×5×63×373)
OEM :1664078/636 6912236
DPI :
NISSENS :62216A 62217A
APPLICATION :
90-93 FORD ESCORT 1.4/1.6L

FO-0067

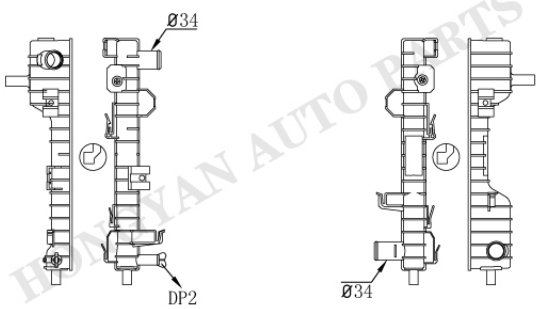

FO-0068

Tank size :(R4.5×5×5×46×436)
OEM :5F9H8005AC 5F9Z8005AA
DPI :2761
NISSENS :
APPLICATION :
05-07 FORD FREESTYIE 3.0L
05-07 FORD FIVE HUNDRED 3.0L
05-07 MERCURY MONTEGO 3.0L

HONGYAN AUTO PARTS

FORD/LINCOLN/MERCURY

FO-0069

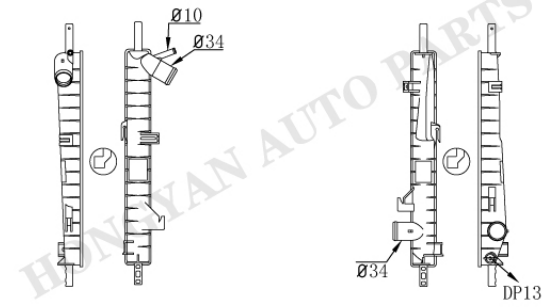

FO-0070

Tank size :(R6×5×5×48×405)
OEM :
DPI :
NISSENS :
APPLICATION :
00-03 FORD MONDEO 2.5/3.0L

FO-0071

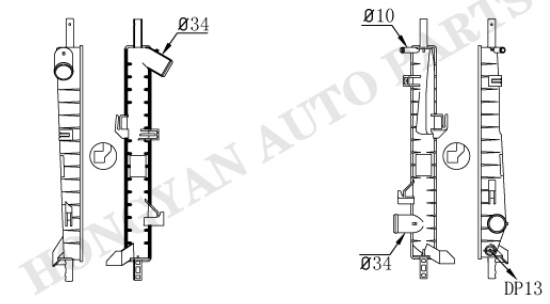

FO-0072

Tank size :(R6×5×5×48×405)
OEM :
DPI :
NISSENS :
APPLICATION :
00-03 FORD MONDEO 2.5/3.0L

FO-0073

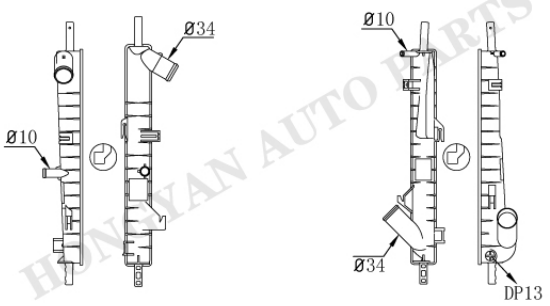

FO-0074

Tank size :(R6×5×5×48×405)
OEM :1114766 1115769
DPI :
NISSENS :62025A
APPLICATION :
00-02 FORD MONDEO 2.0L

FO-0075

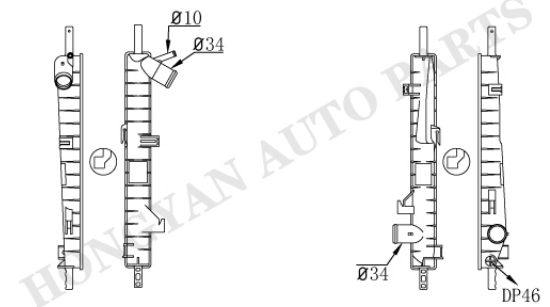

FO-0076

Tank size :(R6×5×5×63×405)
OEM :
DPI :
NISSENS :
APPLICATION :
00-03 FORD MONDEO 2.5/3.0L

HUNYAN AUTO PARTS

FORD/LINCOLN/MERCURY

FO-0077

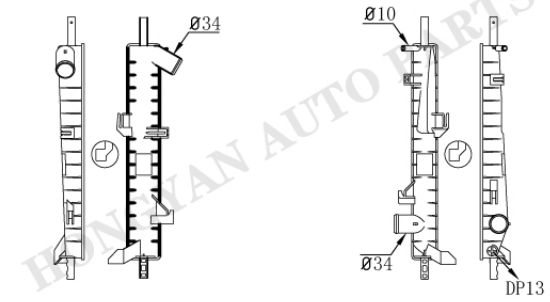

FO-0078

Tank size :(R6×5×5×63×405)
OEM :
DPI :
NISSENS :
APPLICATION :
00-03 FORD MONDEO 2.5/3.0L

FO-0079

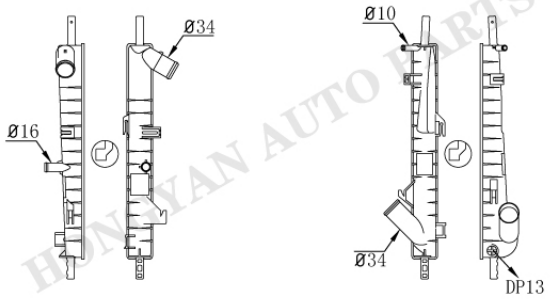

FO-0080

Tank size :(R6×5×5×63×405)
OEM :
DPI :
NISSENS :
APPLICATION :
00-02 FORD MONDEO 2.0L

FO-0077

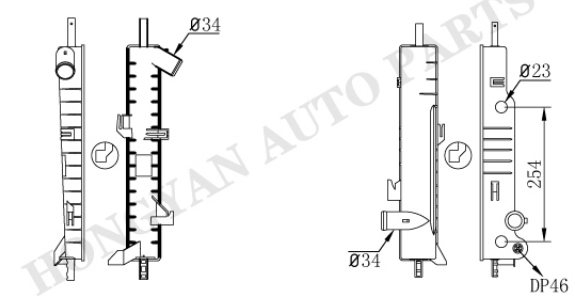

FO-0081AT/MT

Tank size :(R6×5×5×63/72×405)
OEM :FR5Z8005AA/AB
DPI :1718 1719
NISSENS :62050
APPLICATION :
95-00 FORD CONTOUR 2.0/2.5L
95-02 MERCURY COUGAR 2.0/2.5L
95-02 MERCURY MYSTIQUE 2.0/2.5L

FO-0082AT/MT

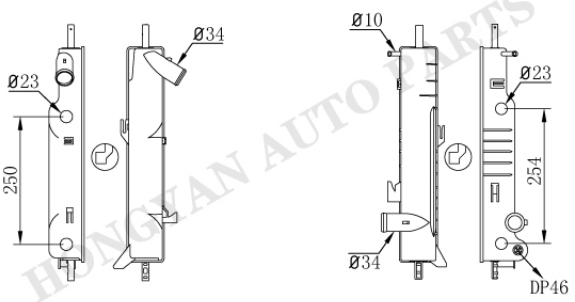

FO-0083AT/MT

Tank size :(R6×5×5.5×72×405)
OEM :6899904 1011984 6775670
DPI :
NISSENS :62105
APPLICATION :
92- FORD MONDEO 1.6/1.8/2.0L

HONGYAN AUTO PARTS

FORD/LINCOLN/MERCURY

FO-0084



FO-0085

Tank size :(R6×5×5×48.5×303)
OEM :96FB8005AC 1001855
1098808
DPI :
NISSENS :62085A
APPLICATION :
95- FORD FIESTA 1.1/1.3L

FO-0086

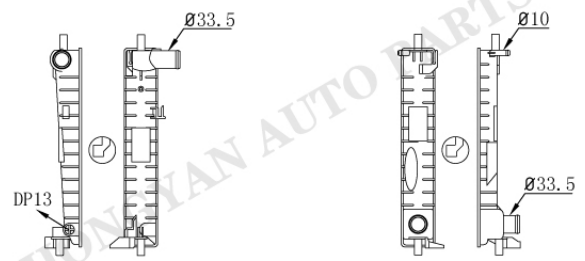

FO-0087

Tank size :(R7×5×5×63×373)
OEM :96FB8005GD 1001860/61
DPI :
NISSENS :62055
APPLICATION :
95- FORD FIESTA 1.8L

FO-0088

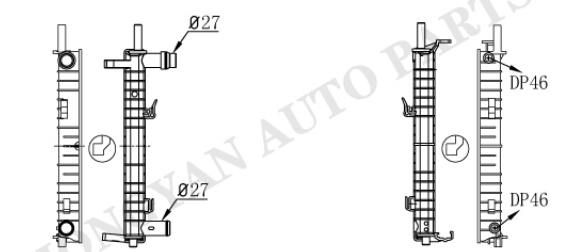

FO-0089

Tank size :(R6.5×4×5×39.5×363)
OEM :120550 1214784
2S6H8005AA/B/D
DPI :
NISSENS :62027A
APPLICATION :
01- FORD FIESTA 1.3/1.4L
02- FORD FUSION 1.3/1.4/1.6L
03- MAZDA 2 1.4L

FO-0090

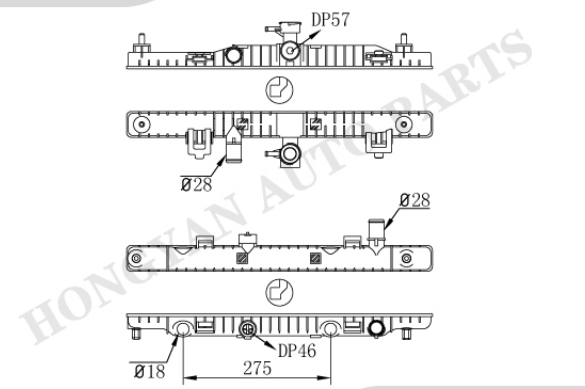

FO-0091AT/MT

Tank size :(R9×4×5×48.5×574)
OEM :
DPI :
NISSENS :
APPLICATION :
09- FORD FIESTA

HONGYAN AUTO PARTS

F0-14

FORD/LINCOLN/MERCURY

FO-0092

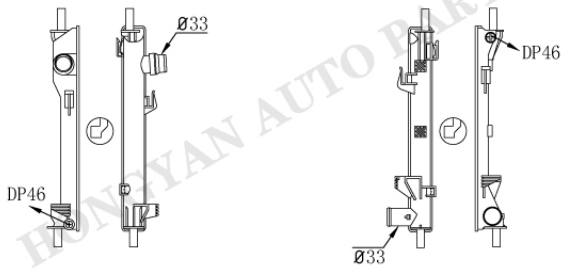

FO-0093

Tank size :(R7×5×5×44.5×385.5)
OEM :
DPI :
NISSENS :
APPLICATION :
10- FORD FIGO 1.4L

FO-0094

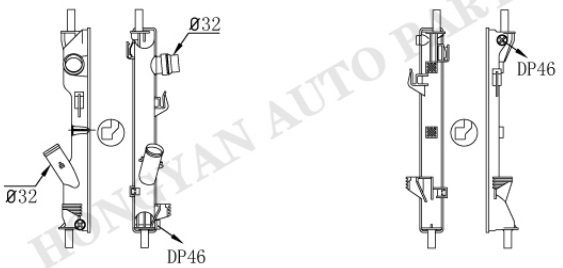

FO-0095

Tank size :(R6.5×4×5×44×384)
OEM :
DPI :
NISSENS :
APPLICATION :

FO-0094-1

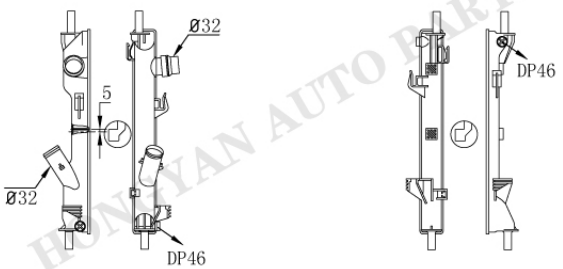

FO-0095

Tank size :(R6.5×4×5×44×384)
OEM :
DPI :
NISSENS :
APPLICATION :

FO-0096

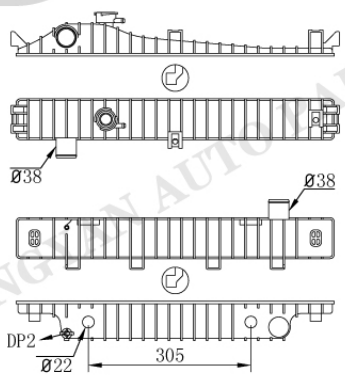

FO-0097AT/MT

Tank size :(R8×5×5×77×597)
OEM :6L2Z8005AA
DPI :2816 2952
NISSENS :
APPLICATION :
06-07 FORD EXPLORER 4.0/4.6L
06- MERCURY MOUNTAINEER 4.0/4.6L

HONGYAN AUTO PARTS

FORD/LINCOLN/MERCURY

FO-0098AT/MT

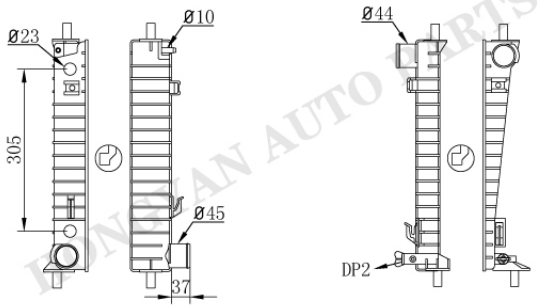

FO-0099

Tank size :(R6.5×5×5×77/46.2×436)
OEM :XL3Z8005AA/DA
DPI :2154 2164 2257
NISSENS :
APPLICATION :
97-04 FORD F-150/F-250 4.6/5.4L
97-04 FORD EXPEDITION 4.6L

FO-0098-1AT/MT

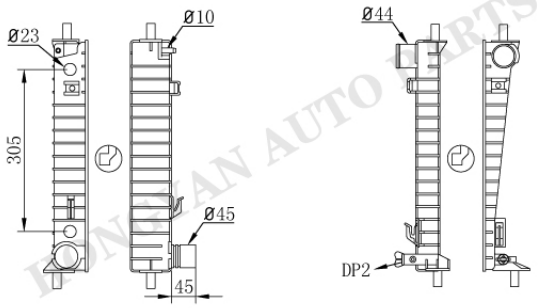

FO-0099

Tank size :(R6.5×5×5×77/46.2×436)
OEM :
DPI :
NISSENS :
APPLICATION :
97-04 FORD F-150/F-250 4.6/5.4L
97-04 FORD EXPEDITION 4.6L

FO-0098-2AT/MT

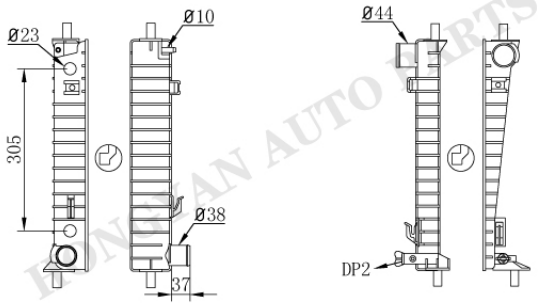

FO-0099

Tank size :(R6.5×5×5×77/46.2×436)
OEM :
DPI :
NISSENS :
APPLICATION :
97-04 FORD F-150/F-250 4.6/5.4L
97-04 FORD EXPEDITION 4.6L

FO-0098AT/MT

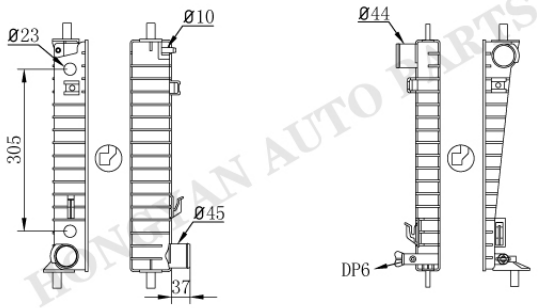

FO-0100

Tank size :(R6.5×5×5×77×436)
OEM :F75Z8005MA
DPI :1997 2165 2555
NISSENS :
APPLICATION :
97-04 FORD F-150/F-250 4.6/5.4L
97-04 FORD EXPEDITION 4.6L

RONGHAN AUTO PARTS

FORD/LINCOLN/MERCURY

FO-0101



FO-0102

Tank size :(R6×5×5×48.5×366.5)
OEM :1231795 1361841
1S5H8005BA/B
DPI :
NISSENS :62005
APPLICATION :
02-08 FORD KA 1.3/1.6L

FO-0103

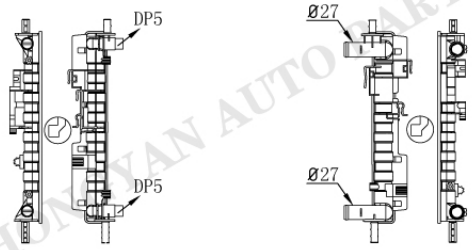

FO-0104

Tank size :(R9×4×5×42×360)
OEM :
DPI :
NISSENS :
APPLICATION :
FORD KA

FO-0105

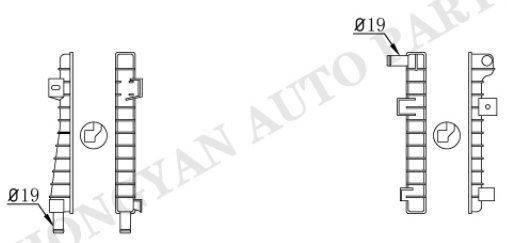

FO-0106

Tank size :(R6×5×5×36.8×303)
OEM :5M6Z8005BE
DPI :2763
NISSENS :
APPLICATION :
05-12 FORD ESCAPE 2.5L
06-11 MERCURY MARINER 2.3/2.5L
08-10 MAZDA TRIBUTE 2.3/2.5L

FO-0107

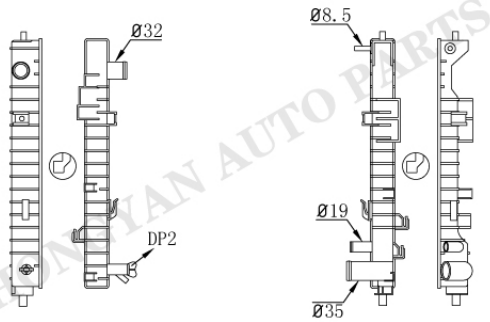

FO-0108

Tank size :(R6.5×5×5×46.5×469)
OEM :5M6Z8005AC
DPI :2762
NISSENS :
APPLICATION :
05-08 FORD ESCAPE 2.3L
06-08 MERCURY MARINER 2.3L
08- MAZDA TRIBUTE 2.3L

HONGYAN AUTO PARTS

FORD/LINCOLN/MERCURY

FO-0109

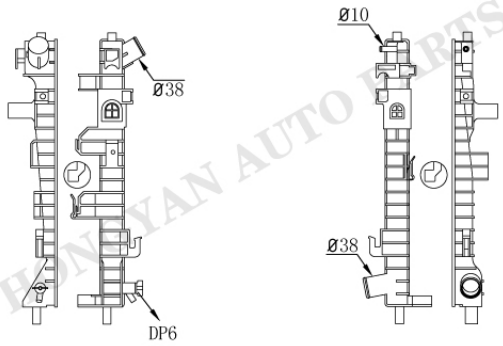

FO-0110

Tank size :(R6.5×5×5×46×504)
OEM :6W1Z8005AA 8W7Z8005A
DPI :2852
NISSENS :
APPLICATION :
06-11 FORD CROWN VICTORIA 4.6L
06-11 LINCOLN TOWN CAR 4.6L
06-11 MERCURY GRAND MARQUIS 4.6L

FO-0111

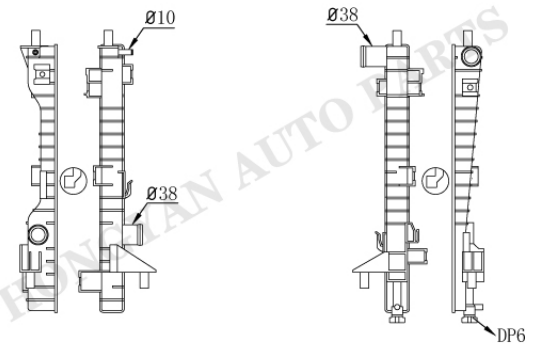

FO-0112

Tank size :(R6.5×5×5×46×504)
OEM :4R3Z8005CA
DPI :2789
NISSENS :
APPLICATION :
04-14 FORD MUSTANG 3.7/5.0L

FO-0113

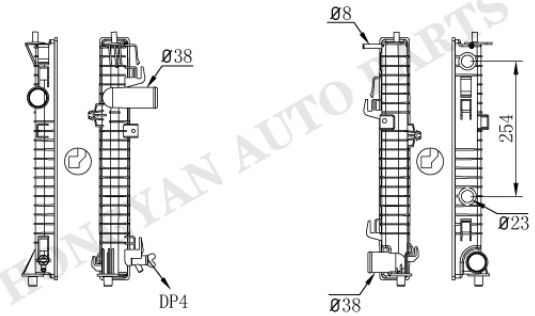

FO-0114AT/MT

Tank size :(R6×4×5×55.5×456)
OEM :6E5Z8005B
DPI :2856
NISSENS :
APPLICATION :
06-09 FORD FUSION 2.3/3.0L
06- LINCOLN ZEPHYR 3.0L
06-09 MERCURY MILIAN 2.3/3.0L

FO-0115

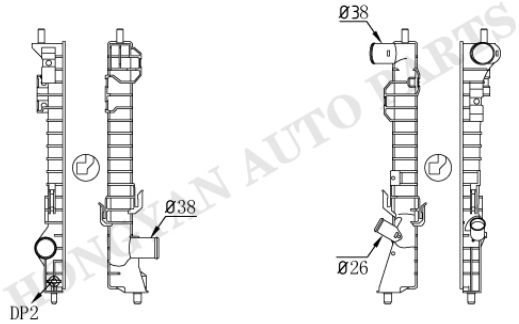

FO-0116

Tank size :(R6.5×5×5×46.5×465.5)
OEM :7T4Z8005A/B
DPI :2937
NISSENS :
APPLICATION :
07-12 FORD EDGE 3.5/3.7L
07-12 FORD FLEX 3.5L
07-12 FORD TAURUS 3.5L
07-12 LINCOLN MKS/T/X 3.5/3.7L
08-09 MERCURY SABLE 3.5L

HUNGYAN AUTO PARTS

FORD/LINCOLN/MERCURY

FO-0117

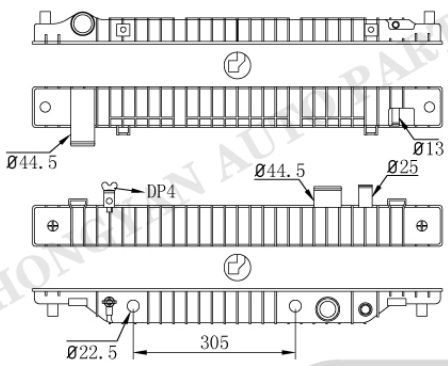

FO-0118AT/MT

Tank size :(R5.5×5×5×76.5×771)
OEM :6C2Z8005BA 3C3Z8005FA
4C3Z8005EB 6C3Z8005DA
DPI :2171
NISSENS :
APPLICATION :
98-05 FORD FO-250/350 6.0/6.8L
98-05 FORD EXCURSION 6.8L

FO-0117-1

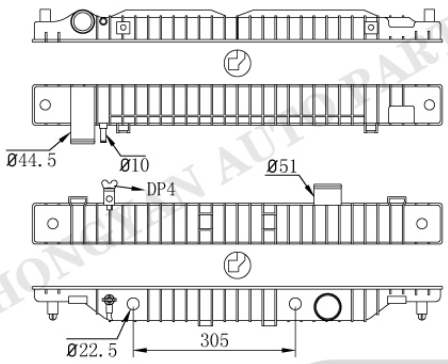

FO-0118-1AT/MT

Tank size :(R5.5×5×5×76.5×771)
OEM :3C348005DE/F 3C3Z8005CA
DPI :2741
NISSENS :
APPLICATION :
03-05 FORD FO-250/350 6.0L
03-05 FORD EXCURSION 6.0L

FO-0119

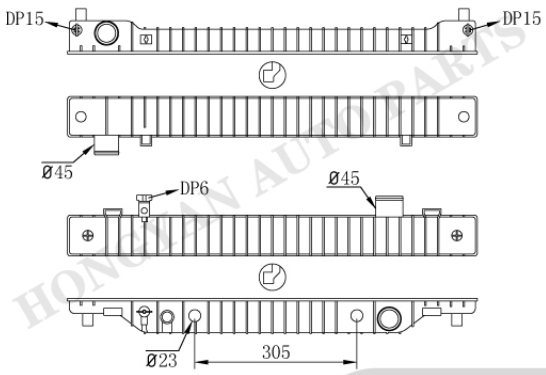

FO-0120AT/MT

Tank size :(R5.5×5×5×76.5×771)
OEM :6C2Z8005AA
DPI :1994
NISSENS :
APPLICATION :
97-14 FORD E-150/250 4.6L

FO-0121

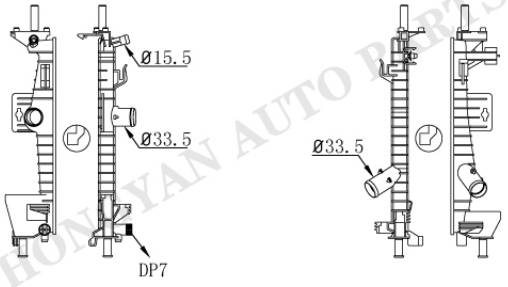

FO-0122

Tank size :(R5×4×5.5×32×370)
OEM :CV6Z8005A
DPI :13219
NISSENS :
APPLICATION :
12-14 FORD FOCUS 2.0L

FORD/LINCOLN/MERCURY

FO-0123

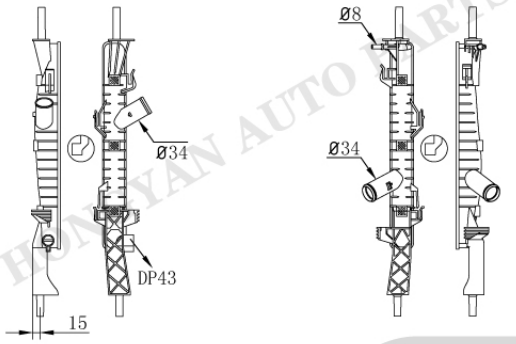

FO-0124

Tank size :(R12×4×5×44×389)
OEM :1370865 1371296 1383315
DPI :
NISSENS :69225
APPLICATION :
06- FORD TRANSIT 2.2/2.3/2.4L

FO-0123-1

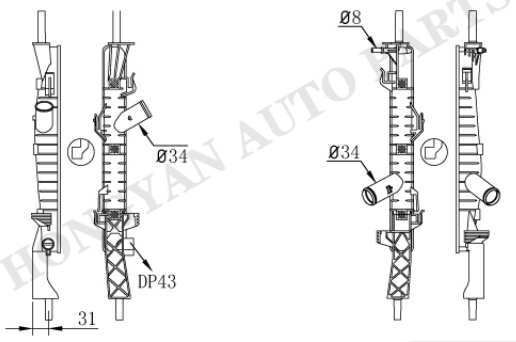

FO-0124

Tank size :(R12×4×5×44×389)
OEM :1373156 1383317
6C118008CA/B/C/D
DPI :
NISSENS :69226
APPLICATION :
06- FORD TRANSIT 2.2/2.3/2.4L

FO-0125

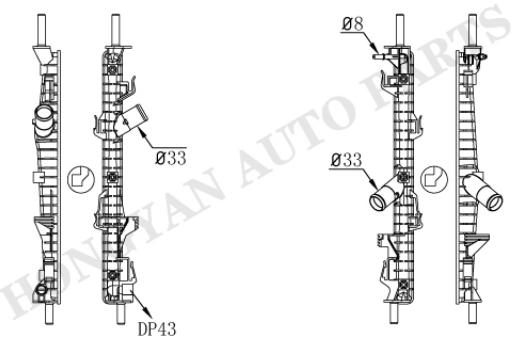

FO-0126

Tank size :(R12×3.8×5×37×475)
OEM :1789645 1776889 1771533
DPI :
NISSENS :66861
APPLICATION :
13- FORD TRANSIT 2.2L

FO-0127

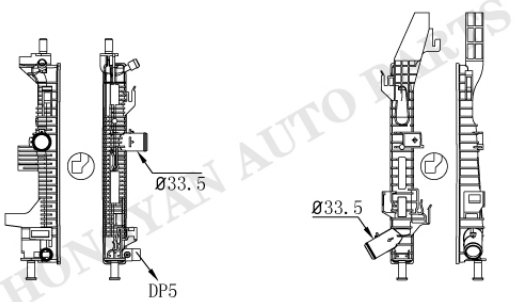

FO-0128

Tank size :(R4.5×4×5×42.5×377)
OEM :1720432 BV618005BB
DPI :
NISSENS :69238
APPLICATION :
11- FORD FOCUS 1.6L

HONGYAN AUTO PARTS

FORD/LINCOLN/MERCURY

FO-0127

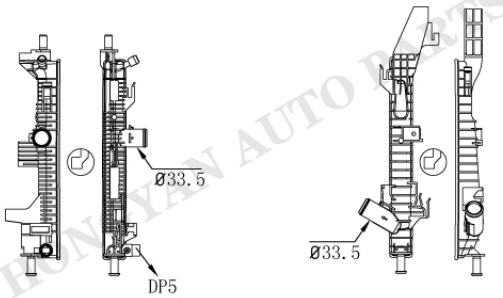

FO-0128-1

Tank size :(R4.5×4×5×42.5×377)
OEM :1766348 1804849
CV618005VA/B
DPI :
NISSENS :66860
APPLICATION :
11- FORD FOCUS 1.0L
10- FORD C-MAX 1.0L

FO-0129AT/MT

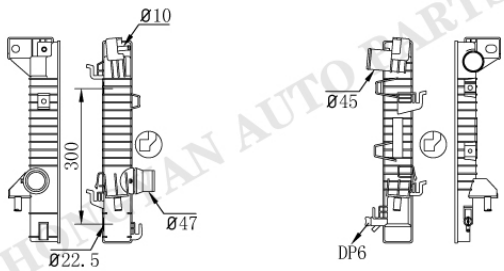

FO-0130

Tank size :(R5×4×5.5×65×447)
OEM :9L3Z8005A 9L3Z8005B
DPI :13045
NISSENS :
APPLICATION :
07-08 FORD EXPEDITION 5.4L

FO-0131AT/MT

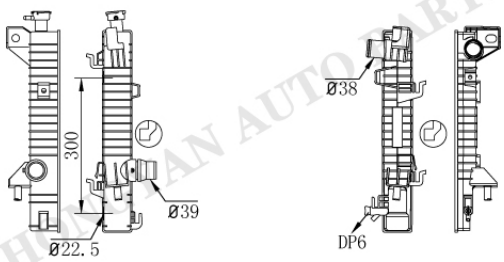

FO-0130-1

Tank size :(R5×4×5.5×65×447)
OEM :9L3Z8005A
DPI :13099
NISSENS :
APPLICATION :
07-12 FORD EXPEDITION 5.4L

FO-0132

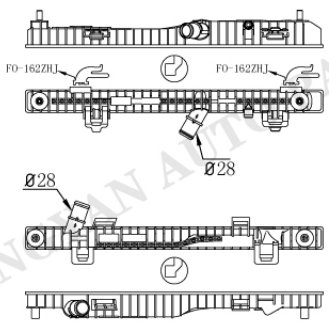

FO-0133

Tank size :(R4.5×4×5×42.5×561.5)
OEM :1768105
DPI :
NISSENS :66858
APPLICATION :
12- FORD B-MAX 1.0L
12- FORD FIESTA 1.0L

HONGYAN AUTO PARTS

FORD/LINCOLN/MERCURY

FO-0132

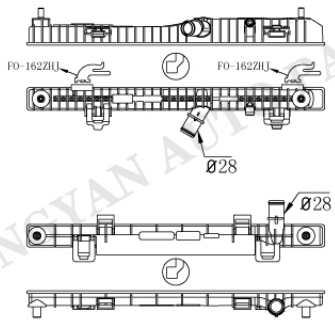

FO-0134

Tank size :(R4.5×4×5×42.5×561.5)
OEM :1772874
DPI :13201
NISSENS :66859
APPLICATION :
12- FORD B-MAX 1.6L
12- FORD FIESTA 1.6L

FO-0135

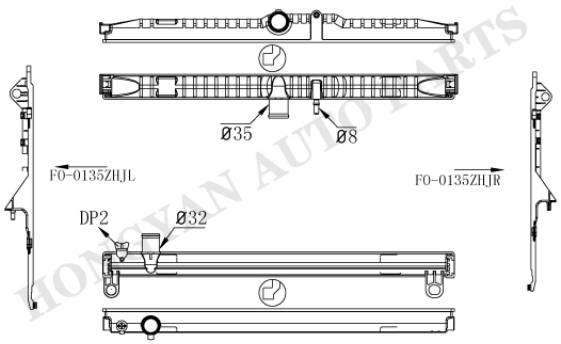

FO-0136

Tank size :(R6×5×5×46.5×659)
OEM :
DPI :
NISSENS :69245
APPLICATION :
11-14 FORD RANGER 2.2L(DIESEL)
11-14 MAZDA BT-50

FO-0135

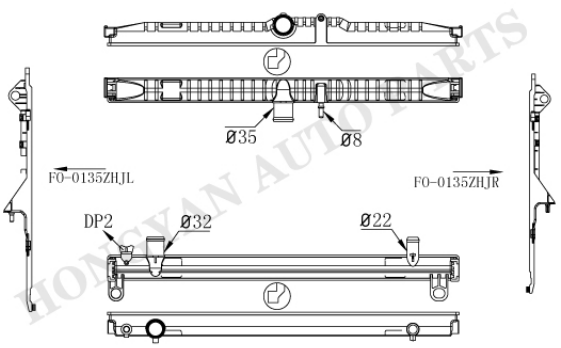

FO-0136-1

Tank size :(R6×5×5×46.5×659)
OEM :1726085 1726089
DPI :
NISSENS :69246
APPLICATION :
11-14 FORD RANGER
11-14 MAZDA BT-50

FO-0137

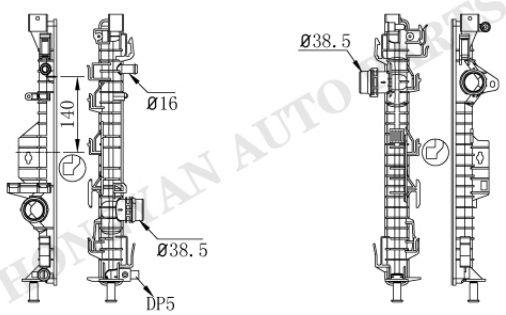

FO-0138

Tank size :(R11.5×4.5×6×42.6×471)
OEM :1377541 1420158 1433321
DPI :13352
NISSENS :65615A
APPLICATION :
07-15 FORD MONDEO 2.0/2.3L
10-15 FORD C-MAX 2.0L
06-15 FORD GALAXY 2.0L
06-15 LAND ROVER FREELANGER 2.0L
06-12 LAND ROVER LR2 2.0L

FO-22

HONGYAN AUTO PARTS

FORD/LINCOLN/MERCURY

FO-0137-1

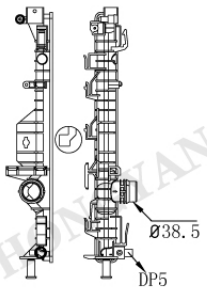

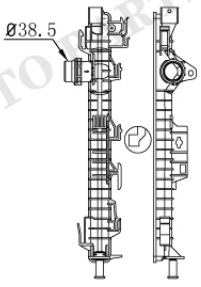

FO-0138-1

Tank size :(R11.5×5×5×42.5×471)
OEM :1377542 1461068
DPI :
NISSENS :66857
APPLICATION :
07- FORD MONDEO IV 1.6/1.8/2.0L
10- C-MAX 1.6/2.0L

FO-0139

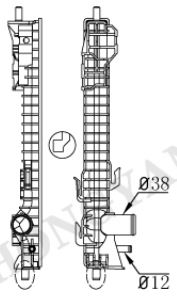

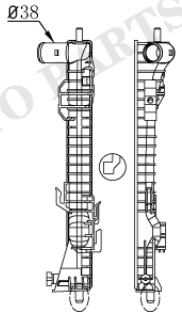

FO-0140

Tank size :(R6×4×5.5×47.5×467)
OEM :DB5Z8005DA DB5Z8005EA
DPI :13308
NISSENS :
APPLICATION :
11-13 FORD EXPLORER 2.0/3.5L

FO-0139-1

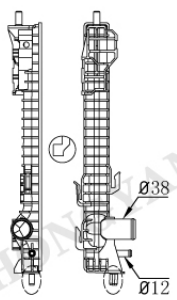

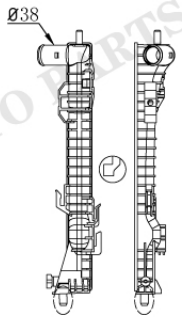

FO-0140-1

Tank size :(R6×4×5.5×47.5×467)
OEM :DG1Z8005D
DPI :13306
NISSENS :
APPLICATION :
13- FORD TAURUS 3.5L

FO-0141

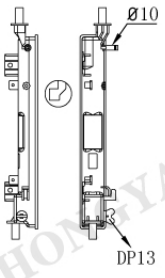

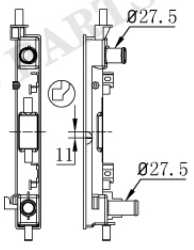

FO-0142

Tank size :(R5×4.3×4.5×47.5×361.5)
OEM :
DPI :
NISSENS :
APPLICATION :
MONDEO

HONGYAN AUTO PARTS

FORD/LINCOLN/MERCURY

FO-0143

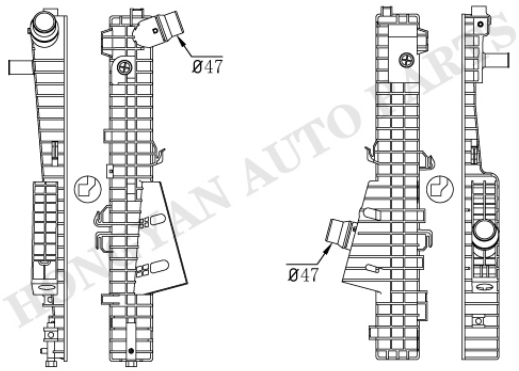

FO-0144

Tank size :(R6.5×5×5.7×89×711)
OEM : 8C3Z8009B
DPI :13022
NISSENS :
APPLICATION :
08-10 F-250 SUPER DUTY 6.4L
08-10 F-350 SUPER DUTY 6.4L
08-10 F-450 SUPER DUTY 6.4L

FO-0145

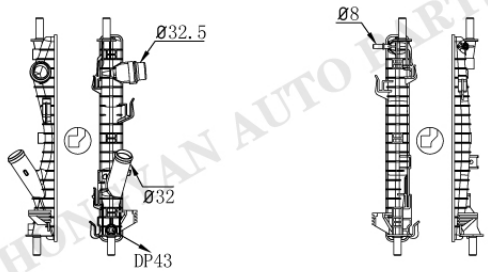

FO-0146

Tank size :(R12.5×3.8×5×44×389)
OEM :Y402-15-200 1334250/254
DPI :
NISSENS :69223
APPLICATION :
01- FORD FIESTA V 1.6D/02
02- FORD FUSION 1.6D
03- MAZDA 2 1.6D

FO-0147

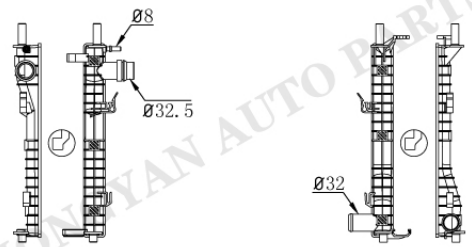

FO-0148

Tank size :(R6.5×3.8×5×40.5×363)
OEM :1334043 1363012 1366013
DPI :
NISSENS :69224
APPLICATION :
01- FORD FIEATA V ST150

FO-0149AT/MT

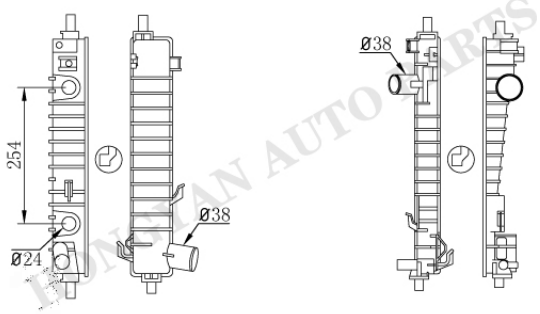

FO-0150

Tank size :(R5×5×5×77/46.2×435)
OEM :F50H8005BA F50Y8005A
DPI :1729
NISSENS :
APPLICATION :
95-02 LINCOLN CONTINENTAL 4.6L

HONGYAN AUTO PARTS

FORD/LINCOLN/MERCURY

FO-0151AT/MT

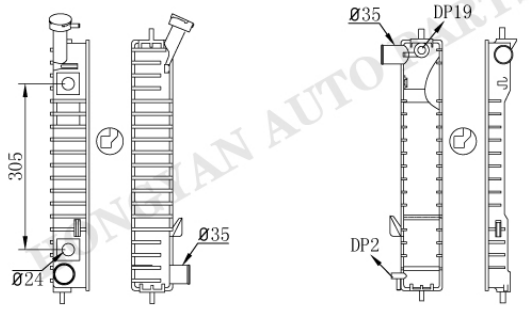

FO-0152

Tank size :(R6×5×5×77×470)
OEM :
DPI :1511
NISSENS :
APPLICATION :
93-95 MERCURY VILLAGER 3.0L
95- NISSAN QUEST 3.0L

FO-0151AT/MT

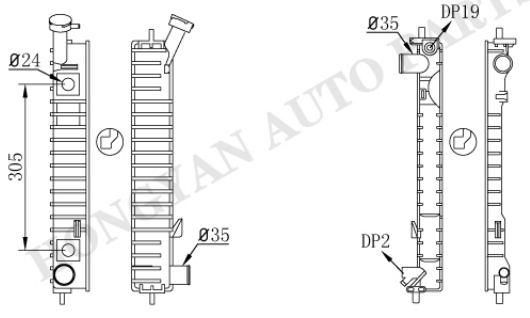

FO-0153

Tank size :(R6×5×5×77/46.2×470)
OEM :
DPI :2259
NISSENS :
APPLICATION :
99-02 MERCURY VILLAGER 3.3L
99-02 NISSAN QUEST 3.3L

FO-0154AT/MT

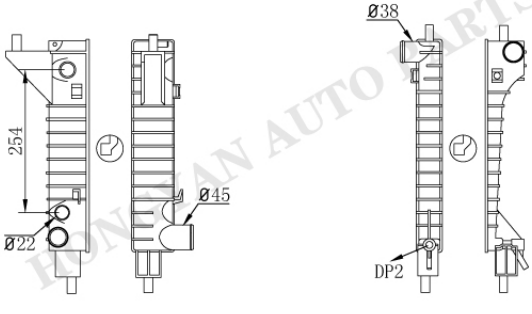

FO-0155

Tank size :(R6.5×5×5×77/46.2×383)
OEM :
DPI :1775
NISSENS :
APPLICATION :
96- FORD MUSTANG 4.6L

FO-0156AT/MT

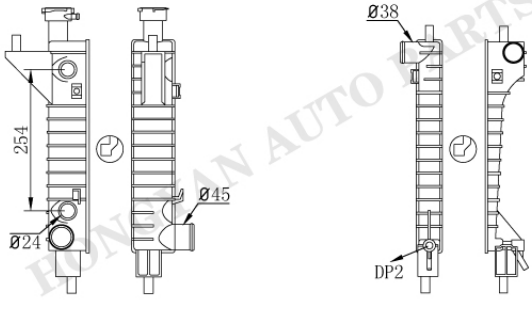

FO-0155

Tank size :(R6.5×5×5×77/46.2×383)
OEM :
DPI :1488
NISSENS :
APPLICATION :
94-96 FORD MUSTANG 3.8/5.0L

RONGHAN AUTO PARTS

FORD/LINCOLN/MERCURY

FO-0157AT/MT

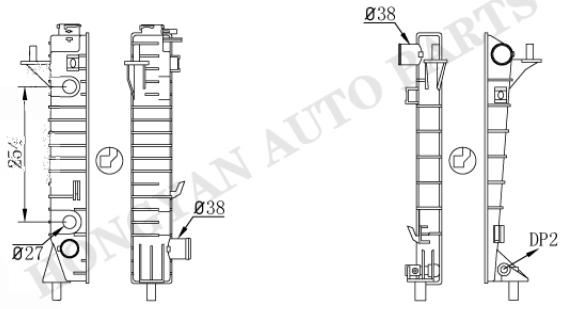

FO-0158

Tank size :(R7×5×5×77/46.2×470)
OEM :
DPI :1550
NISSENS :
APPLICATION :
94-97 FORD THUNDERBIRD 3.8L
94-97 MERCURY COUGAR 3.8L

FO-0159AT/MT

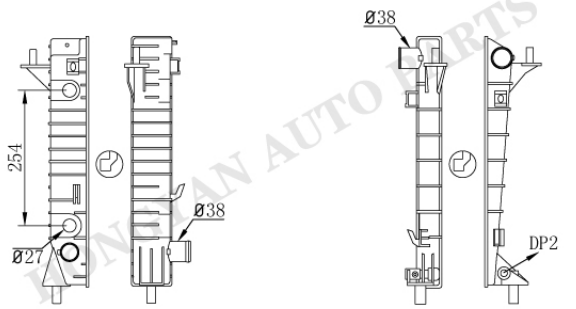

FO-0158

Tank size :(R7×5×5×77/46.2×470)
OEM :
DPI :1551
NISSENS :
APPLICATION :
94-97 FORD THUNDERBIRD 4.6L
94-97 MERCURY COUGAR 4.6L
93-98 LINCOLN MARK VIII 4.6L

FO-0160

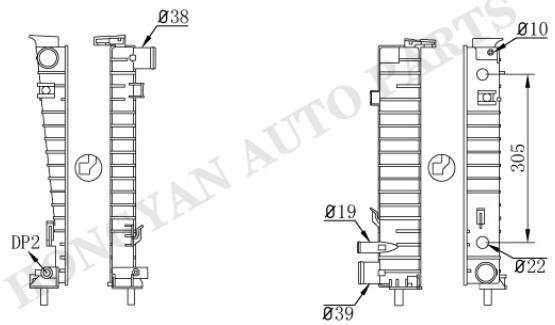

FO-0161AT/MT

Tank size :(R6.5×5×5×46.2/77×435)
OEM :
DPI :2258
NISSENS :
APPLICATION :
99-03 FORD WINDSTAR 3.8L
04-07 FORD FREESTAR 3.9/4.2L
04-07 MERCURY MONTEREY 4.2L

FO-0162AT/MT

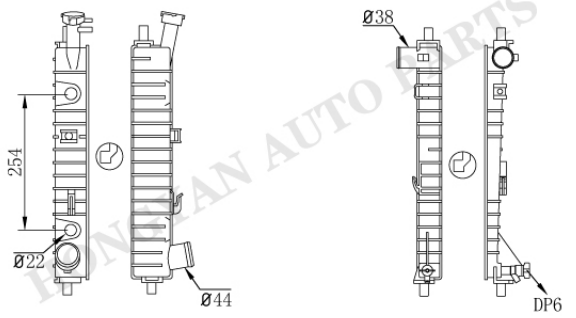

FO-0042

Tank size :(R6.5×5×5×76/46×436)
OEM :
DPI :2138
NISSENS :
APPLICATION :
97-04 FORD MUSTANG 3.8L

RUNYAN AUTO PARTS

FORD/LINCOLN/MERCURY

FO-0163AT/MT

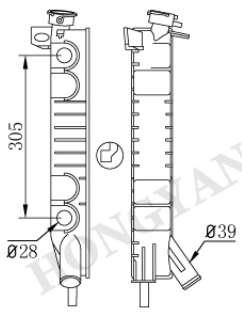

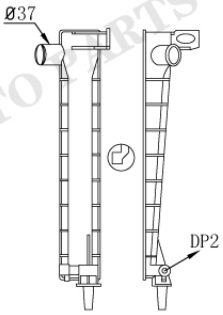

FO-0164

Tank size :(R6.5×5×5×77×470)
OEM :
DPI :1164
NISSENS :
APPLICATION :
91-04 FORD RANGER 4.0L
91-04 FORD EXPLORER 4.0L

FO-0165AT/MT

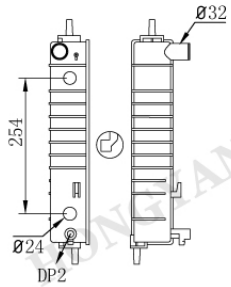

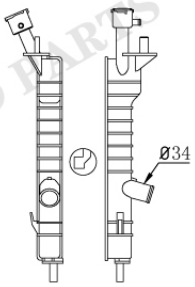

FO-0166

Tank size :(R6.5×5×5×76×383)
OEM :
DPI :1322
NISSENS :
APPLICATION :
92-94 FORD TEMPO 2.3/3.0L
92-94 MERCURY TOPAZ 2.3/3.0L

FO-0167

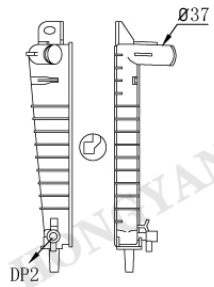

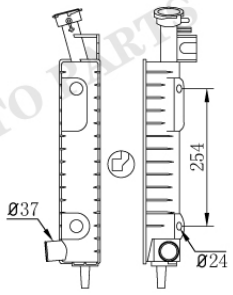

FO-0168AT/MT

Tank size :(R9×5×5×46.2/77×383)
OEM :E70H8005AA/BA/FA
DPI :890
NISSENS :
APPLICATION :
86-91 FORD TAURUS 2.5/3.0L
86-93 MERCURY SABLE 2.5/3.0L

FO-0169

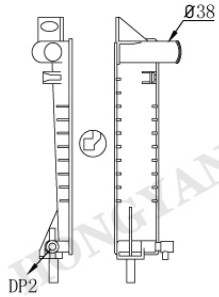

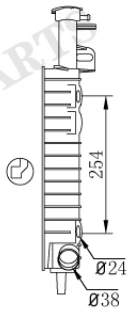

FO-0168-1AT/MT

Tank size :(R9×5×5×77×383)
OEM :
DPI :891
NISSENS :
APPLICATION :
86-88 FORD TAURUS 3.0L
86-89 MERCURY SABLE 3.0L

HONGYAN AUTO PARTS

FORD/LINCOLN/MERCURY

FO-0170

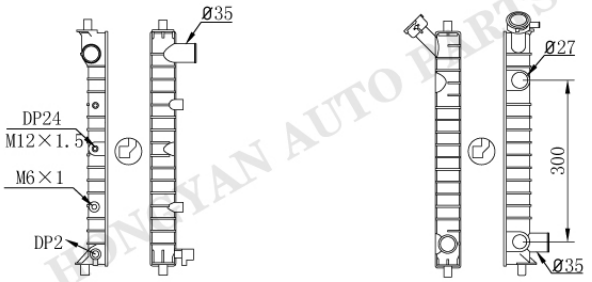

FO-0171AT/MT

Tank size :(R6.5×5×5×47×436)
OEM :
DPI :1273
NISSENS :
APPLICATION :
91-02 FORD ESCORT 2.0L
91-99 MERCURY TRACER 2.0L

FO-0170

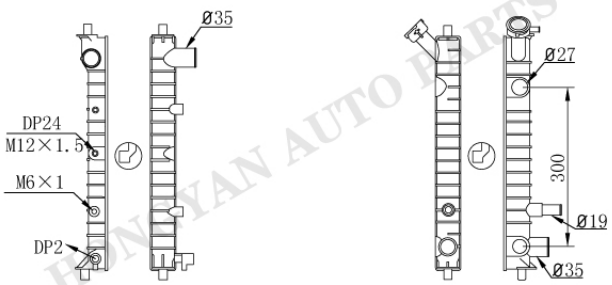

FO-0172AT/MT

Tank size :(R6.5×5×5×47×436)
OEM :
DPI :2140
NISSENS :
APPLICATION :
98-03 FORD ESCORT 2.0L

FO-0173

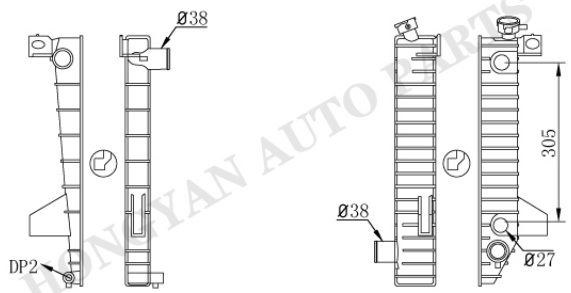

FO-0174AT/MT

Tank size :(R6×5×5×46/77×470)
OEM :
DPI :1726
NISSENS :
APPLICATION :
95-97 FORD RANGER 2.3L
95-97 MAZDA B2300 2.3L

FO-0175

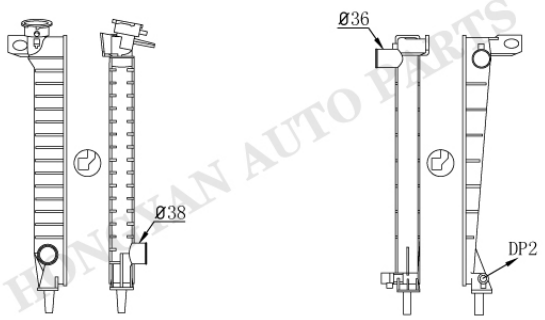

FO-0176

Tank size :(R7×5×5×46×470)
OEM :
DPI :897
NISSENS :
APPLICATION :
85-94 FORD RANGER 3.0/4.0L
91-94 MAZDA NAVAJO 4.0L

HUNGYAN AUTO PARTS

FORD/LINCOLN/MERCURY

FO-0177AT/MT

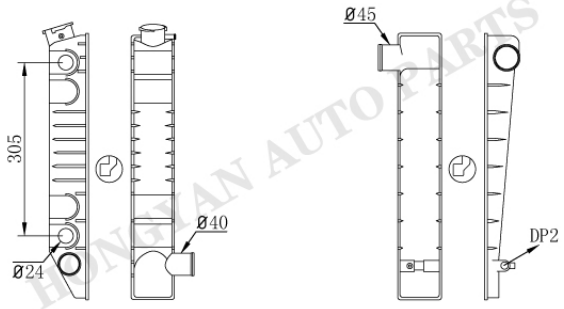

FO-0178

Tank size :(R5.5×5×5×76.2×470)
OEM :
DPI :
NISSENS :
APPLICATION :

FO-0179

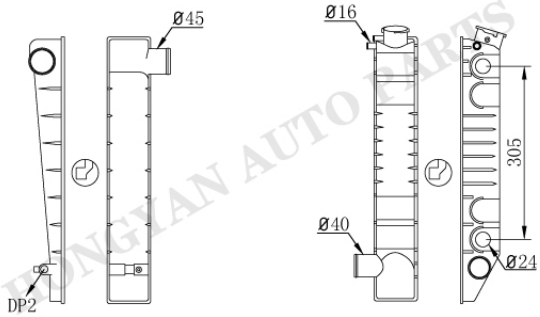

FO-0180AT/MT

Tank size :(R5.5×5×5×76.2×470)
OEM :
DPI :
NISSENS :
APPLICATION :

FO-0181

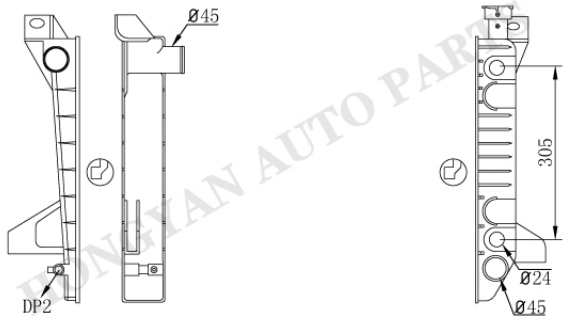

FO-0182AT/MT

Tank size :(R6.5×5×5×76.4×470)
OEM :
DPI :1454
NISSENS :
APPLICATION :
85-97 FORD F-150/250/350 4.9L

FO-0183

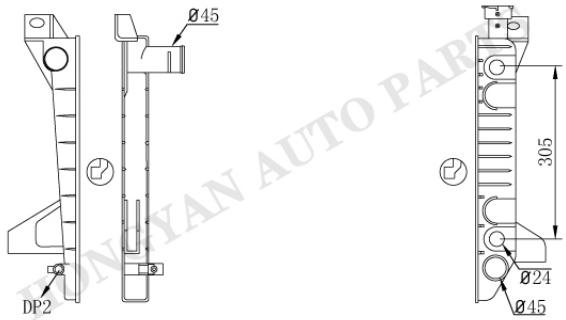

FO-0182AT/MT

Tank size :(R6.5×5×5×46.2/76.4×470)
OEM :
DPI :1452
NISSENS :
APPLICATION :
85-97 FORD F-150/250/350 4.9L

HONGYAN AUTO PARTS

FORD/LINCOLN/MERCURY

FO-0051AT/MT

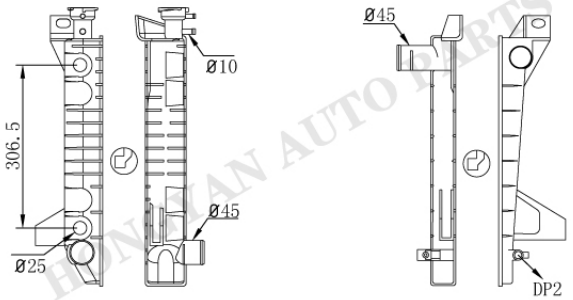

FO-0184

Tank size :(R6.5×5×5×77/46.2×470)
OEM :
DPI :1453
NISSENS :
APPLICATION :
85-98 FORD F-250/350 5.0/5.8L

FO-0185

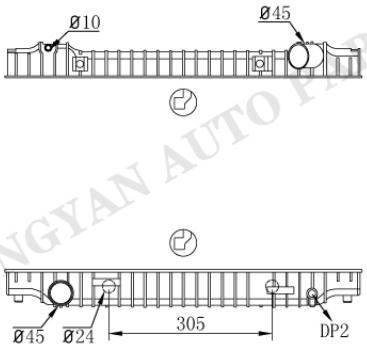

FO-0186AT/MT

Tank size :(R6.5×5×5×77×666)
OEM :
DPI :2976
NISSENS :
APPLICATION :
04-10 FORD E350450 SUPER DUTY 6.0L

FO-0098-2AT/MT

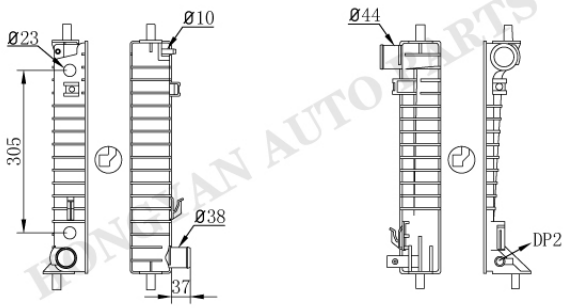

FO-0187

Tank size :(R6.5×5×5×77×436)
OEM :
DPI :2719
NISSENS :
APPLICATION :
03-04 FORD F-150 5.4L
03-04 FORD LOBO 5.4L
03-06 LINCOLN NAVIGATOR 5.4L

FO-0188

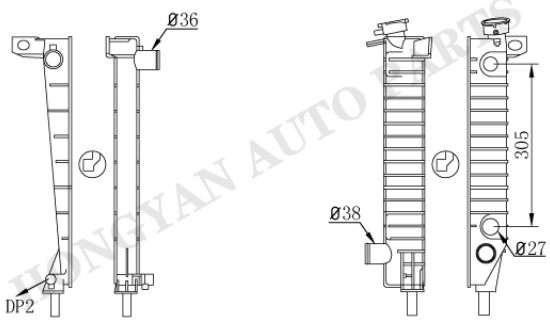

FO-0189AT/MT

Tank size :(R6×5×5×46/77×470)
OEM :
DPI :1062
NISSENS :
APPLICATION :
85-94 FORD RANGER 2.3L
94- MAZDA B2300 2.3L

HONGYAN AUTO PARTS

FORD/LINCOLN/MERCURY

FO-0190AT/MT

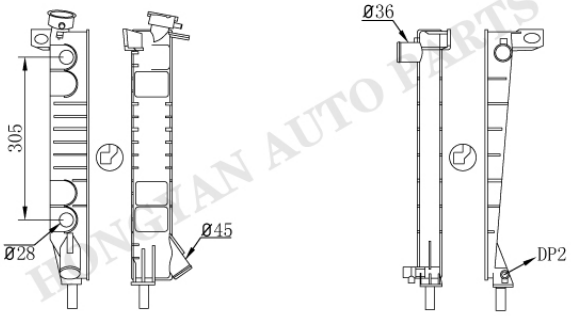

FO-0191

Tank size :(R6×5×5×77/46×470)
OEM :
DPI :1061 1735
NISSENS :
APPLICATION :
85-94 FORD RANGER 3.0/4.0L
85-94 FORD EXPLORER 3.0/4.0L

FO-0192

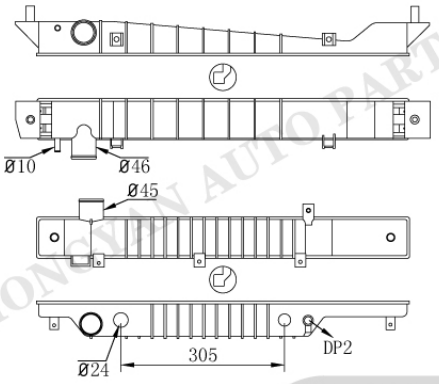

FO-0193AT/MT

Tank size :(R6.5×4×5×76.7×695.5)
OEM :
DPI :2609
NISSENS :
APPLICATION :
03-04 FORD EXPEDITION 4.6/5.4L

FO-0194AT/MT

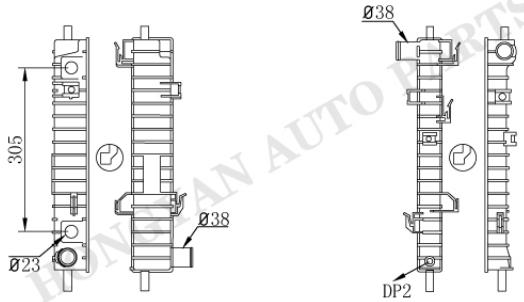

FO-0195

Tank size :(R6.5×5×5×76.5/46×436)
OEM :
DPI :
NISSENS :
APPLICATION :

FO-0196

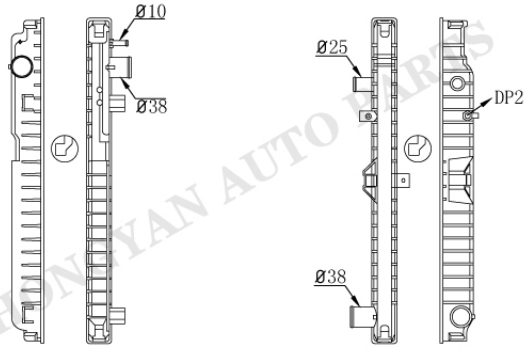

FO-0197

Tank size :(R6×5×5×46×605.5)
OEM :
DPI :2603
NISSENS :
APPLICATION :
03-05 LINCOLN AVIATOR 4.6L

HONGYAN AUTO PARTS

FORD/LINCOLN/MERCURY

FO-0198AT/MT

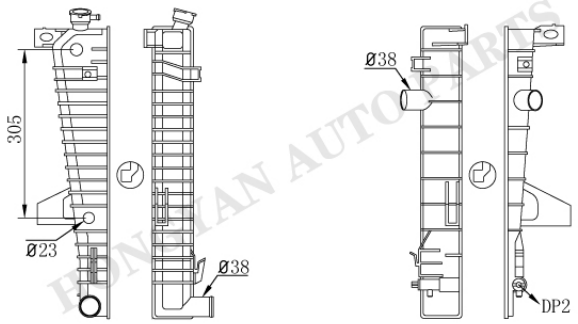

FO-0199

Tank size :(R6.5×5×5×76.7×548)
OEM : F57H8005NB F57H8005DA/F
DPI :1728
NISSENS :
APPLICATION :
95-97 FORD EXPLORER 4.0L

FO-0198AT/MT

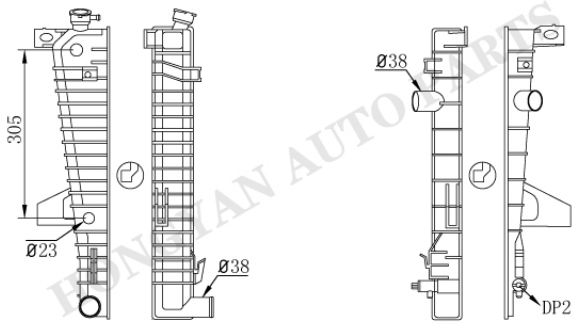

FO-0200

Tank size :(R6.5×5×5×76.7/46.2×548)
OEM :
DPI :1722
NISSENS :
APPLICATION :
95-97 FORD RANGER 3.0/4.0L
95-97 MAZDA B3000 3.0L
95-97 MAZDA B4000 4.0L

FO-0201AT/MT

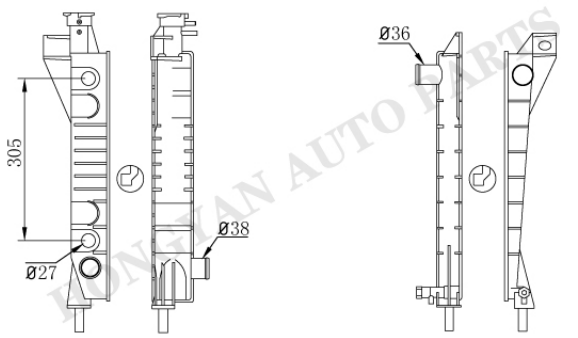

FO-0202

Tank size :(R6.5×5×5×76.5/46.2×470)
OEM :
DPI :901 1063
NISSENS :
APPLICATION :
86-97 FORD AEROSTAR 3.0L

FO-0203

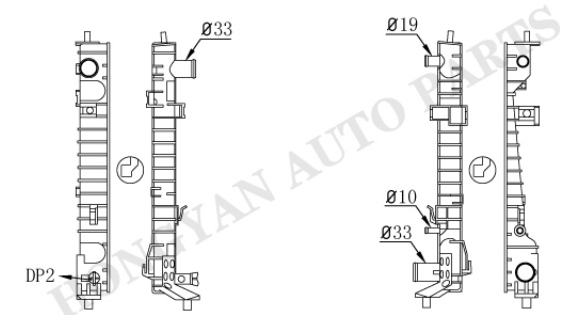

FO-0204

Tank size :(R6.5×5×5×46×470)
OEM :
DPI :13040 13075
NISSENS :
APPLICATION :
08-12 FORD ESCAPE 2.3/2.5L
09-11 MAZDA TRIBUTE 2.5L

FO-32

HONGYAN AUTO PARTS

FORD/LINCOLN/MERCURY

FO-0205

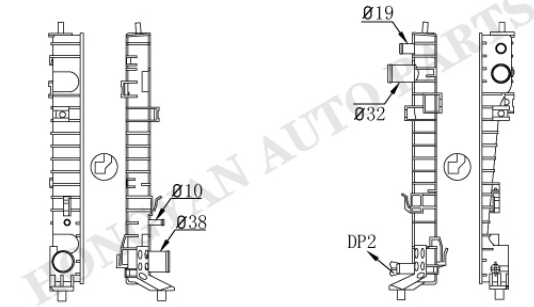

FO-0206

Tank size :(R6.5×5×5×46×470)
OEM :
DPI :13041
NISSENS :
APPLICATION :
08-12 FORD ESCAPE 3.0L
09-11 MERCURY MARINER 3.0L
08-11 MAZDA TRIBUTE 3.0L

FO-0207



FO-0208

Tank size :(R4.5×4×6×47.5×322.5)
OEM :
DPI :
NISSENS :62084
APPLICATION :
89- FORD FIESTA 1.8L

FO-0209



FO-0210

Tank size :(R4.5×4×6×47.5×322.5)
OEM :
DPI :
NISSENS :62076A
APPLICATION :
89- FORD FIESTA 1.0/1.1/1.3/1.4/1.6L

FO-0211



FO-0212

Tank size :(R4.5×4×6×47.5×322.5)
OEM :
DPI :
NISSENS :62162
APPLICATION :
90- FORD ESORT 1.4/1.6L
90- FORD ORION 1.4/1.6L

HONGYAN AUTO PARTS

FORD/LINCOLN/MERCURY

FO-0213



FO-0214

Tank size :(R6.5×4×5×32.5×363)
OEM :
DPI :
NISSENS :62028A 69224
APPLICATION :
01- FORD FIESTA 1.4/1.6L
02- FORD FUSION 1.4/1.6L
03- MAZDA 2 1.3/1.4/1.6L

FO-0215

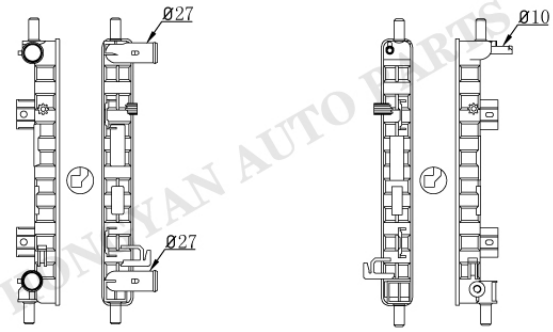

FO-0216

Tank size :(R11×3.8×5×42×360)
OEM :
DPI :
NISSENS :
APPLICATION :
00- FORD KA

FO-0217

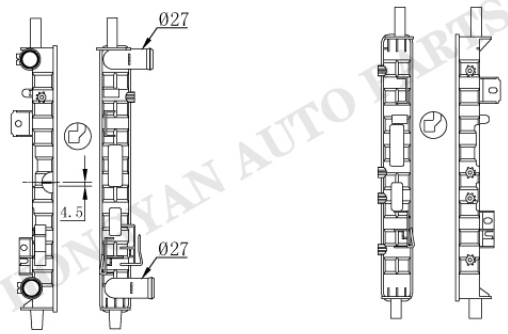

FO-0218

Tank size :(R11×3.8×5×42×360)
OEM :
DPI :
NISSENS :
APPLICATION :
00- FORD KA

FO-0217-1

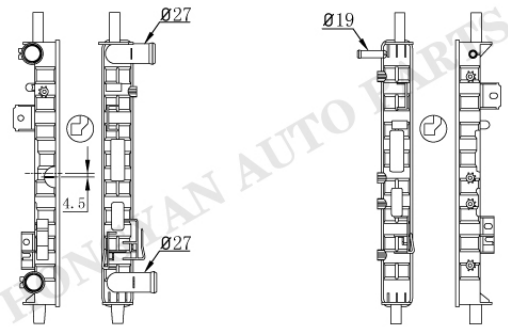

FO-0218-1

Tank size :(R11×3.8×5×42×360)
OEM :
DPI :
NISSENS :
APPLICATION :
00- FORD KA

HONGYAN AUTO PARTS

F0-34

FORD/LINCOLN/MERCURY

FO-0219

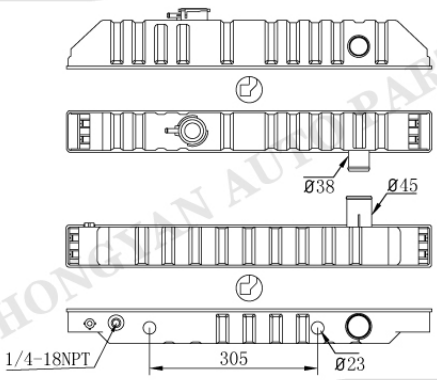

FO-0220AT/MT

Tank size :(R8.5×5×5×77×664)
OEM :
DPI :1455
NISSENS :
APPLICATION :
02-06 FORD E-150/250/350 ECONOLINE 4.9L

FO-0221

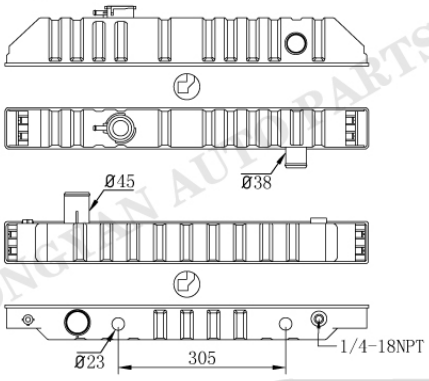

FO-0222AT/MT

Tank size :(R8.5×5×5×77×664)
OEM :
DPI :1456
NISSENS :
APPLICATION :
02-96 FORD E-150/250/350 ECONOLINE 5.8L

FO-0223

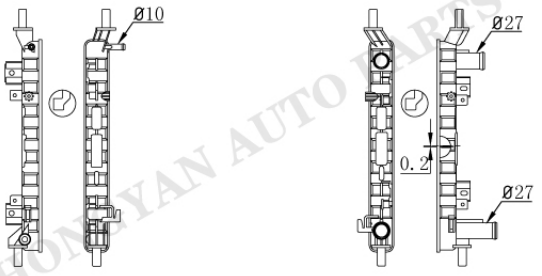

FO-0224

Tank size :(R12×4×5×42×360)
OEM :
DPI :
NISSENS :
APPLICATION :
00- FORD KA

FO-0225

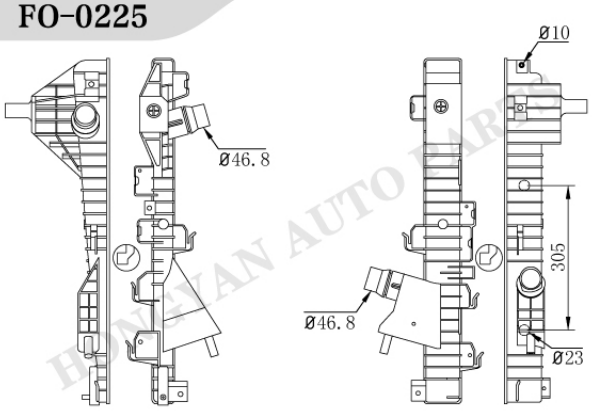

FO-0226AT/MT

Tank size :(R6.5×5×5×46.5/77×704.5)
OEM :88975760 BC3Z8005A
DPI :13231 13145
NISSENS :
APPLICATION :
08-15 FORD F-250/350 SUPER DUTY 6.2/6.8L

HONGYAN AUTO PARTS

FORD/LINCOLN/MERCURY

FO-0227

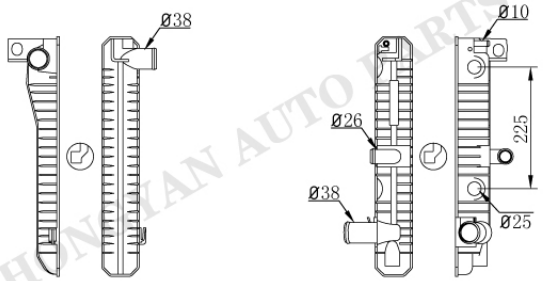

FO-0228AT/MT

Tank size :(5×4×69×443)
OEM :
DPI :
NISSENS :
APPLICATION :

FO-0227

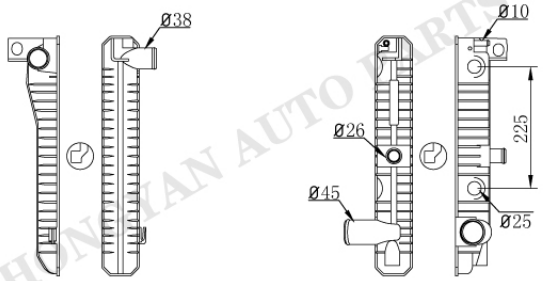

FO-0228-1AT/MT

Tank size :(5×4×69×443)
OEM :
DPI :
NISSENS :
APPLICATION :
88- FORD FALCON

FO-0227

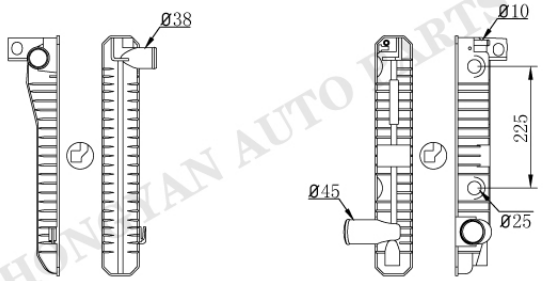

FO-0228-2AT/MT

Tank size :(5×4×69×443)
OEM :
DPI :
NISSENS :
APPLICATION :
88- FORD FALCON

FO-0229

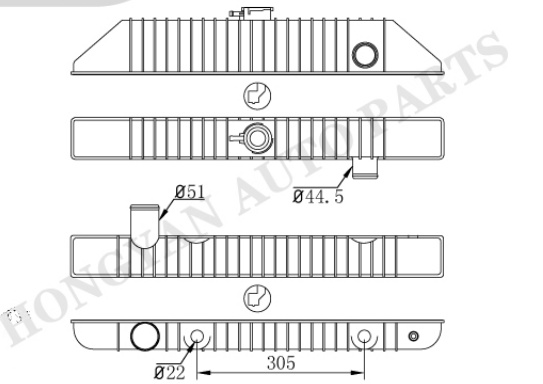

FO-0230AT/MT

Tank size :(R8×6×5×78×679)
OEM :
DPI :456
NISSENS :
APPLICATION :
75-77 FORD F-500 5.4/5.9/6.4L

F0-36

FORD/LINCOLN/MERCURY

FO-0231AT/MT

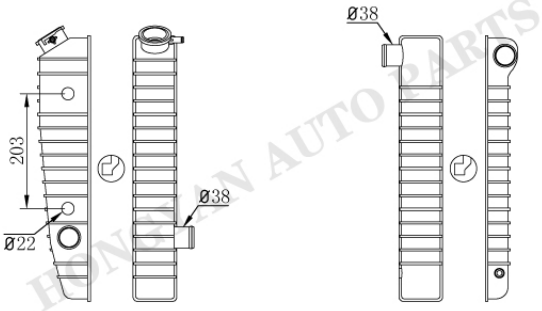

FO-0232

Tank size :(R7×5×5×76.5×470)
OEM :
DPI :546 547 552 1630
NISSENS :
APPLICATION :
78-79 FORD MUSTANG 2.3/3.3/5.0L
78-79 FORD FAIRMONT 2.3/3.3/5.0L
78-79 FORD CAPRI 2.3/3.3/5.0L
78-79 FORD ZEPHYR 2.3/3.3/5.0L

FO-0233

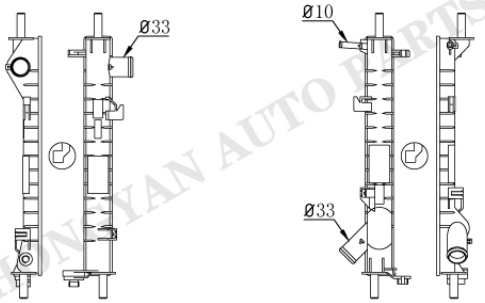

FO-0234

Tank size :(R6.5×5×5.3×48.2×404.5)
OEM :9T1Z8005A
DPI :13184
NISSENS :
APPLICATION :
10-13 FORD TRANSIT CONNECT 2.0L

FO-0233

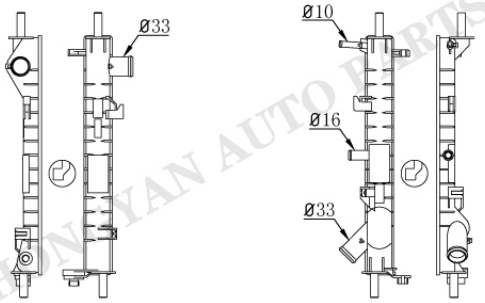

FO-0234-1

Tank size :(R6.5×5×5.3×48.2×404.5)
OEM :
DPI :
NISSENS :
APPLICATION :
10-13 FORD TRANSIT CONNECT 2.0L

FO-0235

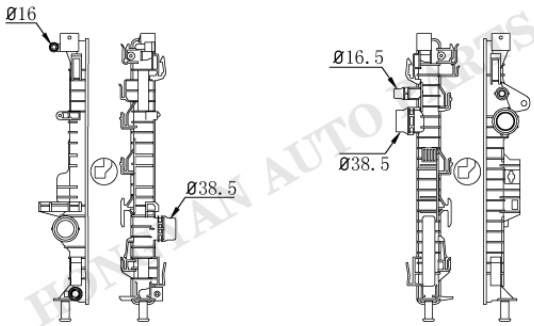

FO-0236

Tank size :(R11.5×4.2×5×42.8×470.8)
OEM :CV6Z8005B
DPI :13313
NISSENS :
APPLICATION :
13-14 FORD ESCAPE 2.0/2.5L
13-14 FORD RRANSIT CONNECT 1.6/2.5L

HONGYAN AUTO PARTS

FORD/LINCOLN/MERCURY

FO-0237

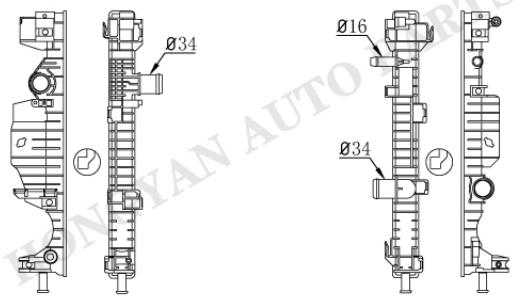

FO-0238

Tank size :(R4.5×5.3×4.2×43×473.3)
OEM :
DPI :13321 13322
NISSENS :
APPLICATION :
13-14 FORD FUSION 1.6/2.0/2.5L

FO-0239

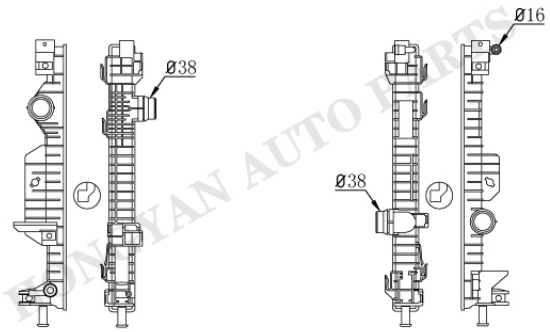

FO-0240

Tank size :(R4.5×5.3×4.2×43×473.3)
OEM :
DPI :13331
NISSENS :
APPLICATION :

FO-0241

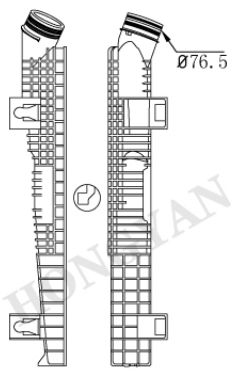

Tank size :(R5.5×6.5×5.5×82.5×660)
OEM :
DPI :
NISSENS :
APPLICATION :

FO-0243

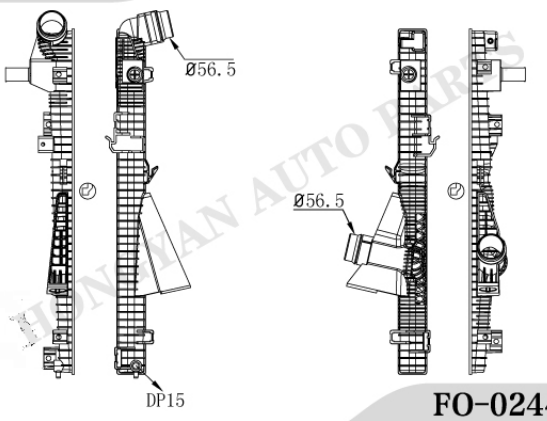

FO-0244

Tank size :(R4.5×4.2×5×60.3×725.5)
OEM :BC3Z8005E
DPI :13230
NISSENS :
APPLICATION :
11-14 FORD F-250/350/450/550 6.7L

F0-38

FORD/LINCOLN/MERCURY

FO-0245



FO-0246

Tank size :(R6.5×4.5×5×45×439.5)
OEM :
DPI :
NISSENS :
APPLICATION :

FO-0247

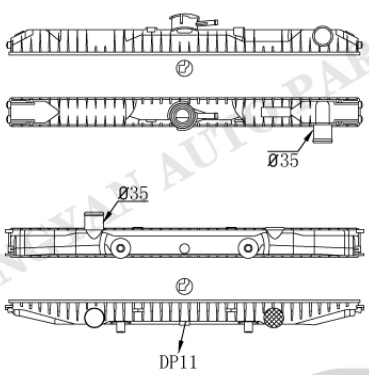

FO-0248

Tank size :(R5×4.5×5×54×660)
OEM :
DPI :
NISSENS :
APPLICATION :

FO-0247

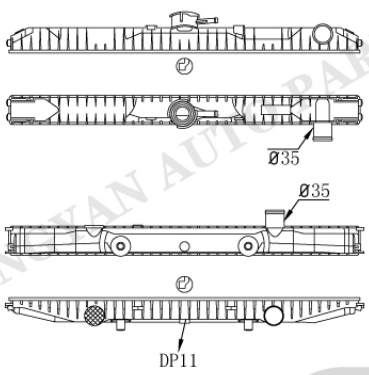

FO-0249

Tank size :(R5×4.5×5×54×660)
OEM :
DPI :
NISSENS :
APPLICATION :

FO-0250

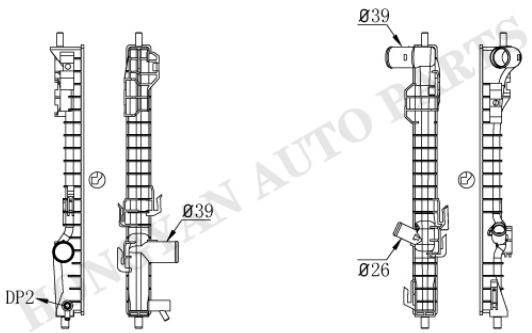

FO-0251

Tank size :(R6.5×5×5×46×507)
OEM :AA828005D
DPI :13185
NISSENS :
APPLICATION :
11-15 FORD EXPLORER 3.5
10-12 FORD FLEX 3.5
10-12 LINCOLN MKT 3.5/3.7L

HONGYAN AUTO PARTS

FORD/LINCOLN/MERCURY

FO-0107

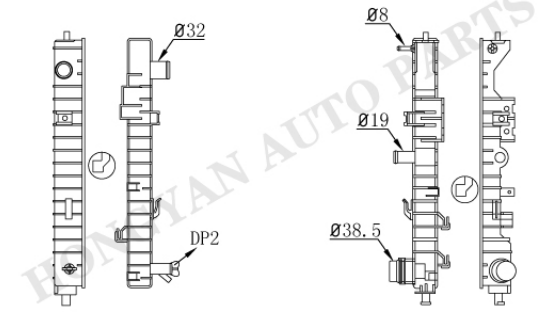

Tank size :(R6.5×5×5×46×470)
OEM :8L8Z18476A
DPI :13209
NISSENS :
APPLICATION :
09-12 FORD ESCAPE 2.5L
09-10 MAZDA TRIBUTE 2.5L
09-11 MERCURY MARINER 2.5L

FO-0252

FO-0253



Tank size :(R4.5×4×5×50×317)
OEM : CT4Z8005A F03010320
DPI :13356
NISSENS :
APPLICATION :
12-14 FORD EDGE 2.0L

FO-0254AT/MT

FO-0255



Tank size :(R6.5×6×5.5×56×449)
OEM :
DPI :
NISSENS :
APPLICATION :
06-09 FORD FUSION 2.3/3.0L

FO-0256AT/MT

FO-0225

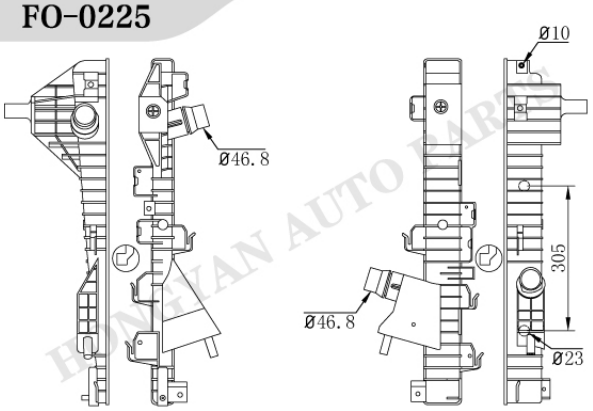

Tank size :(R6.5×5×5×46.5/77×704.5)
OEM :
DPI :13145
NISSENS :
APPLICATION :
08-15 FORD F-250/350 SUPER DUTY 5.4/6.8L

FO-0257AT/MT

F0-40

HONGYAN AUTO PARTS

FORD/LINCOLN/MERCURY

FO-0258

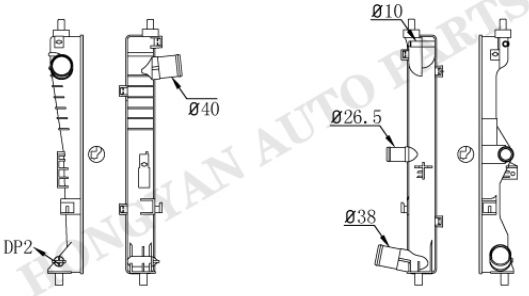

FO-0259

Tank size :(R9×4×5×54.5×448)
OEM :
DPI :
NISSENS :
APPLICATION :
01-10 FORD FALCON FG

FO-0260

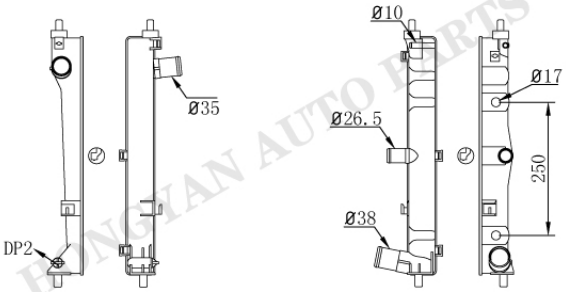

FO-0261AT/MT

Tank size :(R9×4×5×54.5×448)
OEM :
DPI :
NISSENS :
APPLICATION :
01-10 FORD FALCON FG

FO-0260

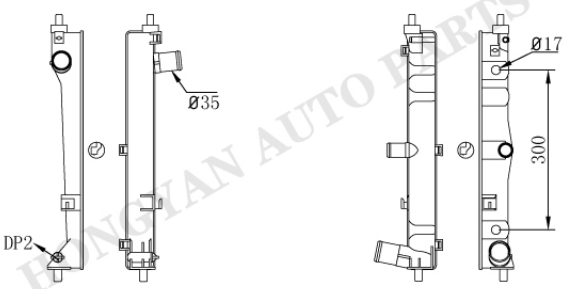

FO-0261-1AT

Tank size :(R9×4×5×54.5×448)
OEM :
DPI :
NISSENS :
APPLICATION :
01-10 FORD FALCON FG

FO-0258

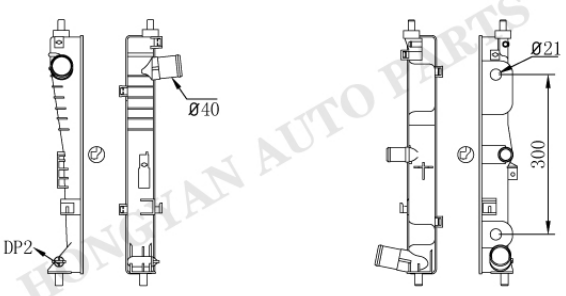

FO-0262AT/MT

Tank size :(R9×4×5×54.5×448)
OEM :
DPI :
NISSENS :
APPLICATION :
01-10 FORD FALCON FG

HONGYAN AUTO PARTS

FORD/LINCOLN/MERCURY

FO-0263

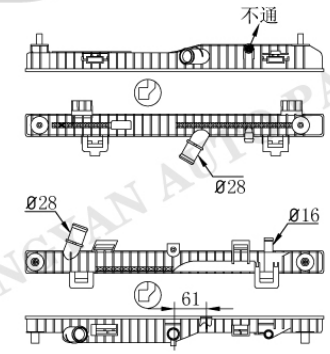

FO-0264

Tank size :(R4.5×4×5×42.5×561.5)
OEM :
DPI :
NISSENS :
APPLICATION :
12- FORD FIESTA

FO-0132

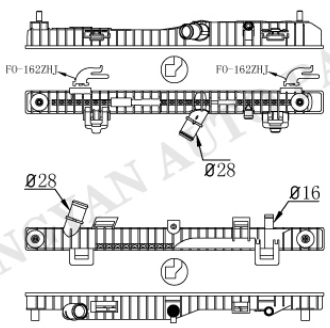

FO-0265

Tank size :(R4.5×4×5×42.5×561.5)
OEM :
DPI :
NISSENS :
APPLICATION :
12- FORD FIESTA

FO-0132

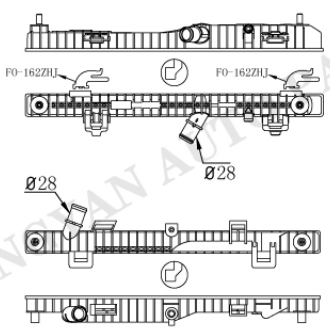

FO-0266

Tank size :(R4.5×4×5×42.5×561.5)
OEM :
DPI :
NISSENS :
APPLICATION :
12- FORD FIESTA

FO-0267

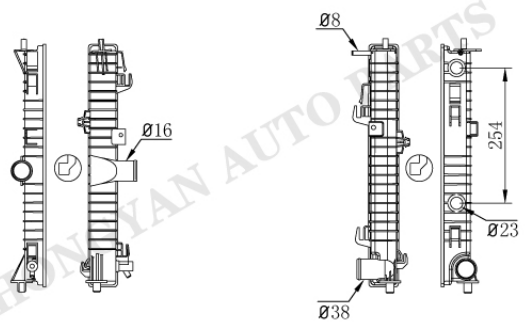

FO-0114AT/MT

Tank size :(R6×4×5×55.5×456)
OEM :CA0715200A
DPI :13089 13088
NISSENS :
APPLICATION :
09-10 MAZDA 6 2.5/3.7L

FO:42

HONGYAN AUTO PARTS

FORD/LINCOLN/MERCURY

FO-0268

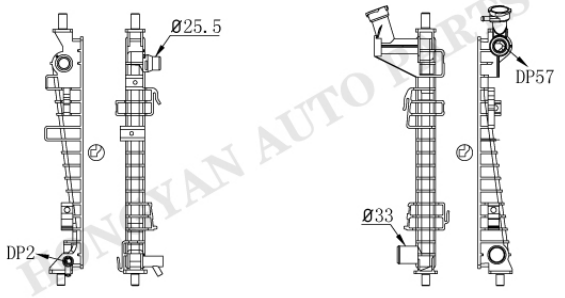

FO-0269

Tank size :(R6.5×5×5×36.5×436)
OEM :8S4Z8005A
DPI :13087
NISSENS :
APPLICATION :
08-11 FORD FOCUS 2.0L

FO-0270

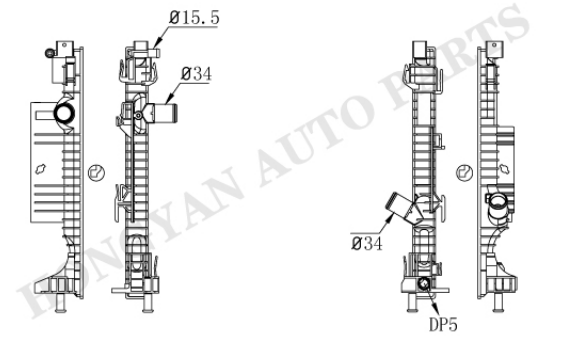

FO-0271

Tank size :(R4.5×4×5×43×474)
OEM :EJ738005AG
DPI :
NISSENS :
APPLICATION :
FORD FOCUS 1.5T

FO-0272AT/MT

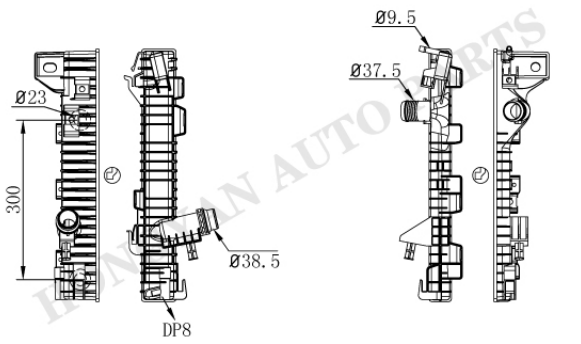

FO-0273

Tank size :(R5.5×4×5.5×42/65×475)
OEM :
DPI :13510
NISSENS :
APPLICATION :
15-16 FORD F-150 2.7/3.5/5.0L

FO-0274

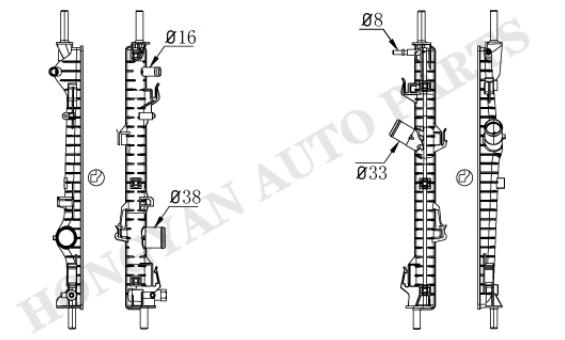

FO-0275

Tank size :(R9×4×5×40×496.5)
OEM :
DPI :13454
NISSENS :
APPLICATION :
FORD TRANSIT-150 3.2/3.5/3.7L
FORD TRANSIT-250 3.2/3.5/3.7L
FORD TRANSIT-350 3.2/3.5/3.7L

FO:43

FORD/LINCOLN/MERCURY

FO-0276

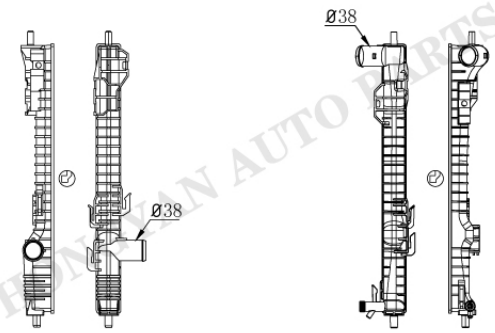

FO-0277

Tank size :(R5.5×4×5.5×48×507)
OEM :
DPI :13364
NISSENS :
APPLICATION :
13-15 FORD EXPLORER 3.5L

FO-0278

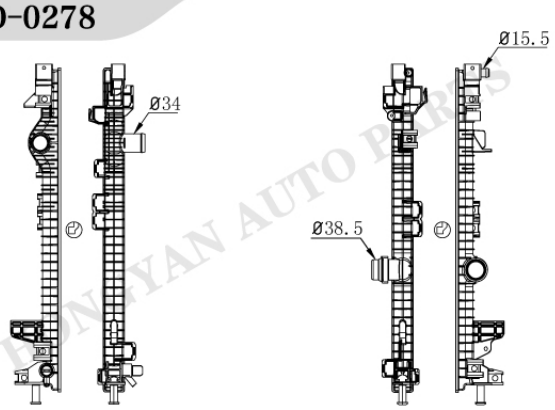

FO-0279

Tank size :(R×3.5×5.5×41×609.5)
OEM :
DPI :
NISSENS :
APPLICATION :
15- FORD EDGE

FO-0280

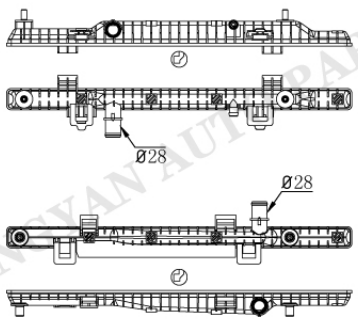

FO-0281

Tank size :(R9×4×5×40×650)
OEM :C1BZ8005A F03010327
DPI :13430
NISSENS :
MODINE :
14-15 FORD FIESTA 1.6LT

FO-0282

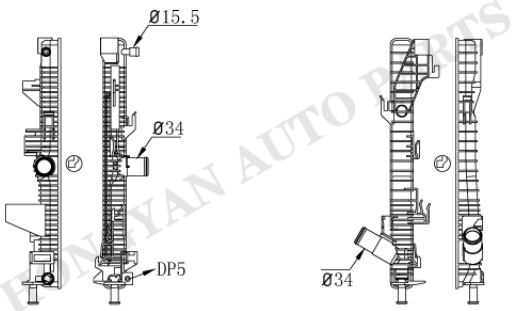

FO-0283

Tank size :(R11.5×4×5×43×471)
OEM :
DPI :
NISSENS :
MODINE :
16- FORD FOCUS 1.0L(Turbocharged)

FO:44

HONGYAN AUTO PARTS

FORD/LINCOLN/MERCURY

FO-0284



FO-0285AT/MT

Tank size : (64×349)
OEM :
DPI :
NISSENS :
APPLICATION :
81-90 FORD ESCORT

FO-0286



FO-0287AT/MT

Tank size : (65×385)
OEM :
DPI :
NISSENS :
APPLICATION :
86-97 FORD TAURUS

FO-0288



FO-0289

Tank size :(63×303)
OEM :
DPI :
NISSENS :
APPLICATION :
92- FORD FIESTA 1.4/1.6/1.8/16L

FO-0290AT/MT

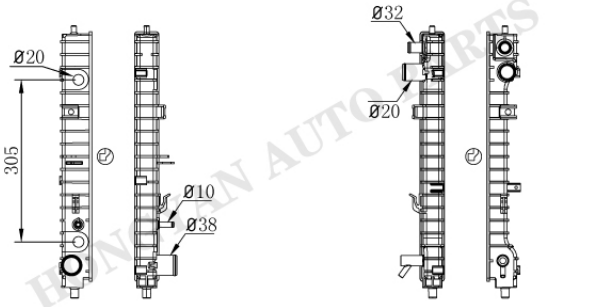

FO-0291

Tank size :(R6×5×5×46×470)
OEM :4522301/4098943/4106727
DPI :2307
NISSENS :62003
APPLICATION :
01-08 FORD ESCAPE 3.0L
01-06 MAZDA TRIBUTE 3.0L
05-08 MERCURY MARINER 3.0L

HONGYAN AUTO PARTS

FO:45

FORD/LINCOLN/MERCURY

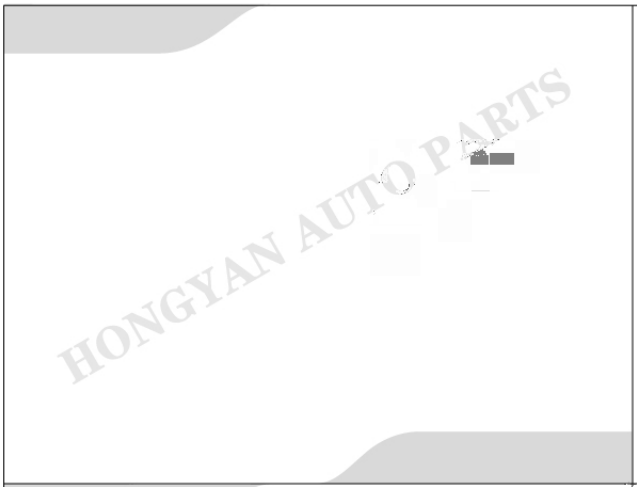

Tank size :
OEM :
DPI :
NISSENS :
APPLICATION :

FO-0294



FO-0295

Tank size :(49×366)
OEM :5S4Z8005AA
DPI :
NISSENS :
APPLICATION :
05-07 FORD FOCUS

FO-0296



FO-0297

Tank size :(46×470)
OEM :5W4Z8005AA
DPI :
NISSENS :
APPLICATION :
00-05 LS/STYPE/THUNDEBIRD/XJ8

FO-0298



FO-0299

Tank size :(46×470)
OEM :7L1Z8005A
DPI :
NISSENS :
APPLICATION :
07- EXPEDITION 5.4L

FO:46

HONGYAN AUTO PARTS

FORD/LINCOLN/MERCURY

FO-0300



FO-0301

Tank size :(46×470)
OEM :8L8Z8005B
DPI :
NISSENS :
APPLICATION :
08- ESCAPE 3.0L

FO-0302



FO-0303

Tank size :(46×470)
OEM :
DPI :
NISSENS :
APPLICATION :
09- ESCAPE HYBRID

FO-0304AT/MT



FO-0305

Tank size :(70×609.5)
OEM :
DPI :
NISSENS :
APPLICATION :
10- RANGER 2.3L

FO-0306AT/MT

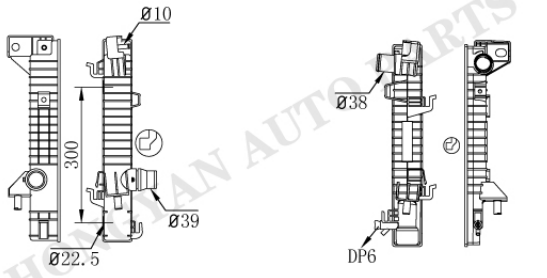

FO-0130-1

Tank size :(R5×4×5.5×65×447)
OEM :
DPI :13227 13228 13229
NISSENS :
APPLICATION :
11-14 FORD F150 3.5/3.7/5.0/6.2L
11-14 FORD LOBO 6.2L
15-17 FORD EXPEDITION 3.5L
15-17 LINCOLN NAVIGATOR 3.5L

HONGYAN AUTO PARTS

FORD/LINCOLN/MERCURY

FO-0307AT/MT

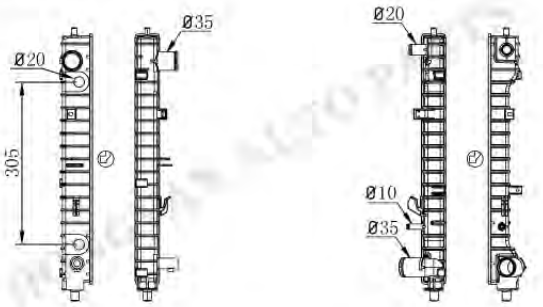

FO-0308

Tank size :(R6×5×5×46×470)
OEM :YF0915200 A4119589
DPI :2306
NISSENS :62004
APPLICATION :
01-04 FORD ESCAPE 2.0L
01-04 MAZDA TRIBUTE 2.0L

FO-0309



FO-0310

Tank size : (R8×4.5×4×43×405)
OEM :
DPI :
NISSENS :
APPLICATION :
FORD FISTA

FO-0311

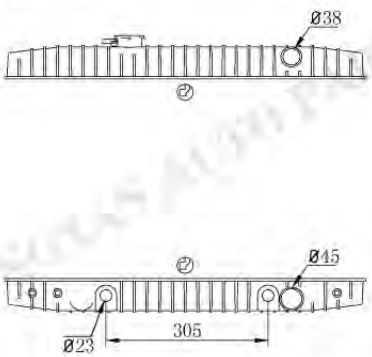

FO-0312AT/MT

Tank size :(R9×4.8×5×76×679)
OEM :
DPI :1455
NISSENS :
APPLICATION :
92-96 FORD E-150 4.9/6.0L
92-96 FORD E-250 4.9L
92-96 FORD E-350 4.9L
95- FORD CLUB 4.9L

FO-0311

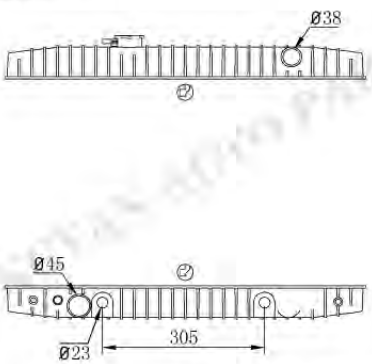

FO-0313AT/MT

Tank size :(R9×4.8×5×76×679)
OEM :
DPI :1333
NISSENS :
APPLICATION :
75-82 FORD E-100 5.0/5.8/6.6L

F0:48

FORD/LINCOLN/MERCURY

FO-0314

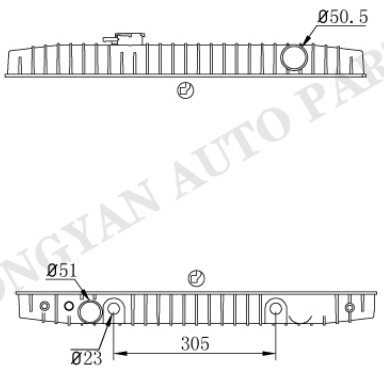

FO-0315AT/MT

Tank size :(R9×4.8×5×76×679)
OEM :
DPI :
NISSENS :
APPLICATION :

FO-0316

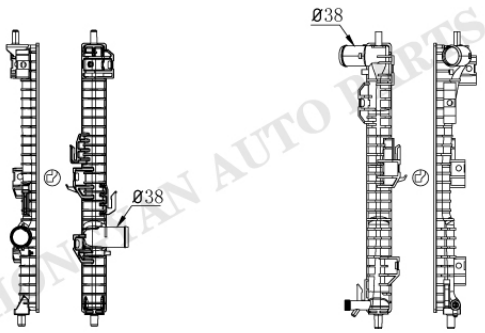

FO-0317

Tank size :(R5.5×4×5×47.5×507)
OEM :
DPI :
NISSENS :
APPLICATION :
FORD EXPLORER

FO-0318

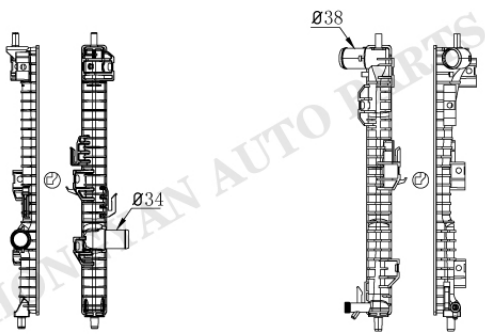

FO-0317

Tank size :(R5.5×4×5×47.5×507)
OEM :
DPI :
NISSENS :
APPLICATION :
FORD EXPLORER

FO-0319

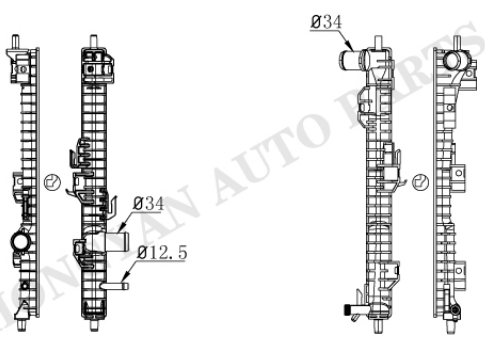

FO-0320

Tank size :(R5.5×4×5×47.5×507)
OEM :
DPI :
NISSENS :
APPLICATION :
FORD EXPLORER

HONGYAN AUTO PARTS

FO:49

FORD/LINCOLN/MERCURY

FO-0321

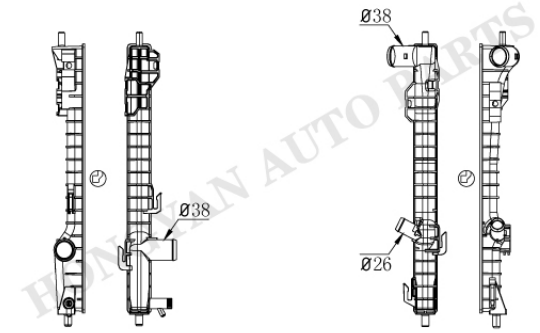

FO-0322

Tank size :(R6.5×5×5×46×507)
OEM :
DPI :13185
NISSENS :
APPLICATION :
11-15 FORD EXPLORER 3.5L
10-16 FORD FLEX 3.5L
10-12 LINCOLN MKT 3.5/3.7L

FO-0250

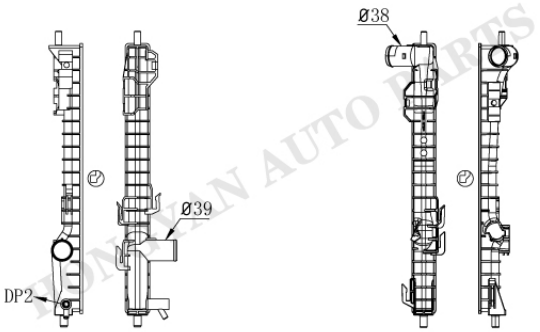

FO-0323

Tank size :(R6.5×5×5×46×507)
OEM :
DPI :
NISSENS :
APPLICATION :
11-15 FORD EXPLORER 3.5L
10-16 FORD FLEX 3.5L
10-12 LINCOLN MKT 3.5/3.7L

FO-0324

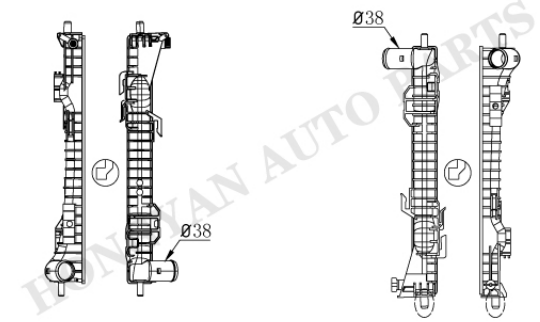

FO-0140

Tank size :(R6×4×5.5×47.5×467)
OEM :
DPI :
NISSENS :
APPLICATION :
11-13 FORD EXPLORER 2.0/3.5L

FO-0225

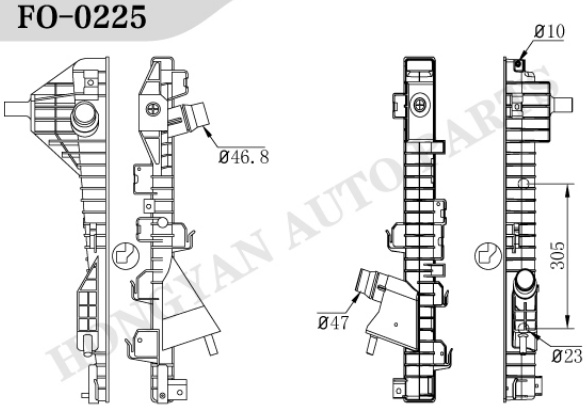

FO-0325AT/MT

Tank size :(R6.5×5×5×46.5/77×704.5)
OEM :22035000303
DPI :13231
NISSENS :
APPLICATION :
08-15 FORD F-250/350 SUPER DUTY 5.4/6.8L

F0:50

FORD/LINCOLN/MERCURY

FO-0033

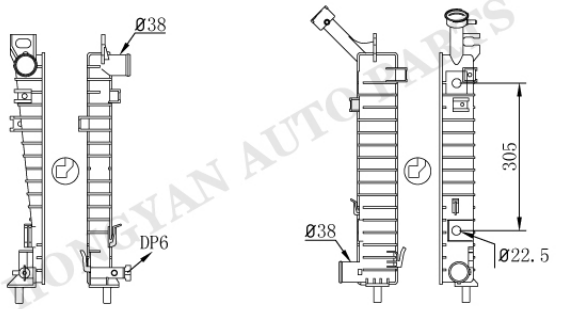

FO-0326AT/MT

Tank size :(R6.5×5×5×46/77×436)
OEM :
DPI :
NISSENS :
APPLICATION :
95-98 WINDSTAR 3.0/3.8L

FO-0233

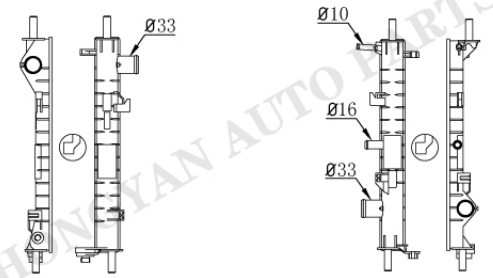

FO-0327

Tank size :(R6.5×5×5.3×48.2×404.5)
OEM :
DPI :
NISSENS :
APPLICATION :
10-13 FORD TRANSIT CONNECT 2.0L

FO-0328

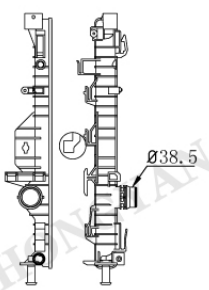

Tank size :(R11.5×4.5×6×42.6×471)
OEM :
DPI :
NISSENS :
APPLICATION :

FO-0330

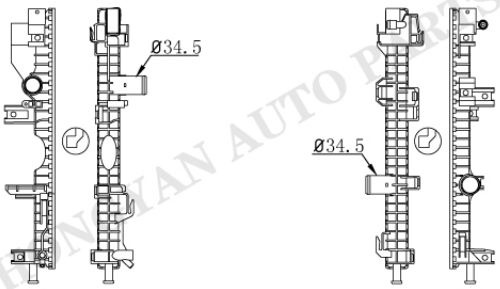

FO-0331

Tank size :(R5×4×5.5×42×490.5)
OEM :
DPI :
NISSENS :
APPLICATION :
15- TAURUS 2.0 L

HONGYAN AUTO PARTS

FO:51

FORD/LINCOLN/MERCURY

FO-0332

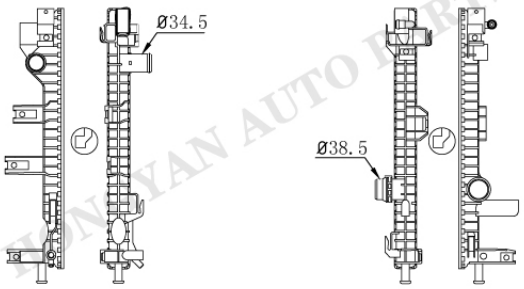

FO-0333

Tank size :(R5×4×5.5×42×490.5)
OEM :
DPI :
NISSENS :
APPLICATION :
15- TAURUS 2.0L

FO-0119

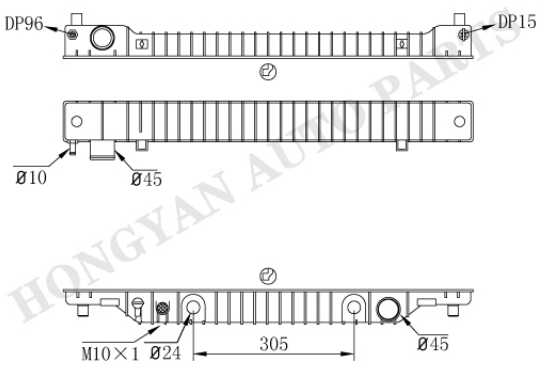

FO-0334AT/MT

Tank size :(R5.5×5×5×76.5×771)
OEM :
DPI :1724
NISSENS :
APPLICATION :
95-96 FORD E-350 ECONOLINE 7.3L

FO-0335AT/MT

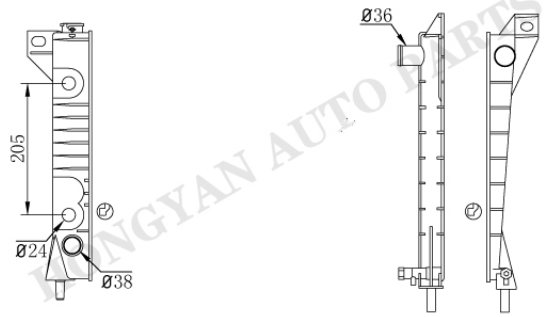

FO-0202

Tank size :(R6.5×5×5×76.5/46.2×470)
OEM :
DPI :1095 1410
NISSENS :
APPLICATION :
89-93 FORD THUNDERBIRD 3.8/5.0L
91-93 MERCURY COUGAR 3.8/5.0L

FO-0335-1AT

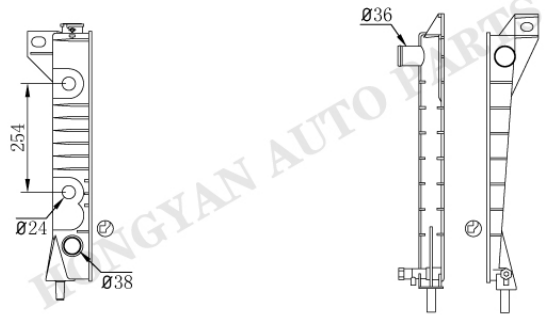

FO-0202

Tank size :(R6.5×5×5×76.5/46.2×470)
OEM :
DPI :
NISSENS :
APPLICATION :
89-93 FORD THUNDERBIRD 3.8/5.0L
91-93 MERCURY COUGAR 3.8/5.0L

FO:52

HONGYAN AUTO PARTS

FORD/LINCOLN/MERCURY

FO-0035

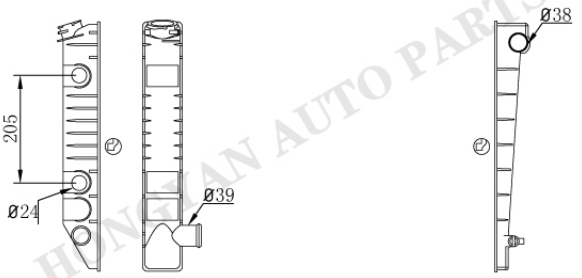

FO-0336

Tank size :(R6.5×5×5×46/70×469)
OEM : FOVY8005A/B FOVH8005AA/BA
DPI :227
NISSENS :
APPLICATION :
87-91 FORD COUNTRY SQUIRE 5.0L
87-91 FORD LTDCROWN VICTORIA 5.0L
86-90 LINCOLN TOWN CAR 5.0L
86-91 MERCRY GRAND MARQUIS 5.0L
86-91 MERCRY COLONY PARK 5.0L

FO-0035

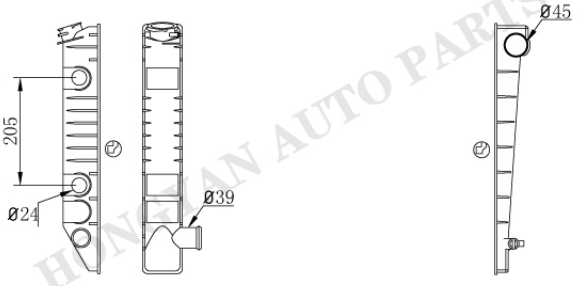

FO-0337

Tank size :(R6.5×5×5×46/70×469)
OEM :
DPI :
NISSENS :
APPLICATION :
87-91 FORD COUNTRY SQUIRE 5.0L
87-91 FORD LTDCROWN VICTORIA 5.0L
86-90 LINCOLN TOWN CAR 5.0L
86-91 MERCRY GRAND MARQUIS 5.0L
86-91 MERCRY COLONY PARK 5.0L

FO-0338



FO-0256AT/MT

Tank size :(R6.5×6×5.5×56×449)
OEM :
DPI :13184
NISSENS :
APPLICATION :
10-13 FORD TRANSIT CONNECT 2.0L

FO-0339

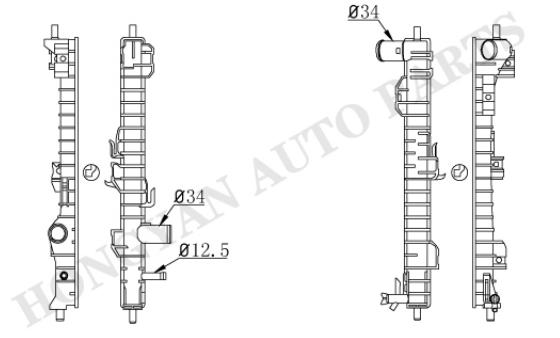

FO-0340

Tank size :(R6.5×5×5×46.5×508.5)
OEM :
DPI :13362
NISSENS :
APPLICATION :
13-15 FORD EXPLORER/POLICE

FO:53

FORD/LINCOLN/MERCURY

FO-0341

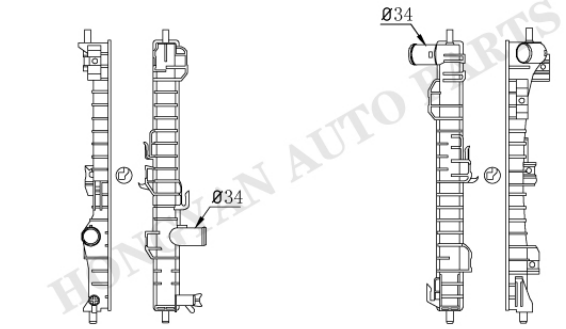

Tank size :(R6.5×5×5×46.5×508.5)
OEM :
DPI :13327
NISSENS :
APPLICATION :
12-15 FORD EXPLORER 2.0L

FO-0342

FO-0003AT/MT

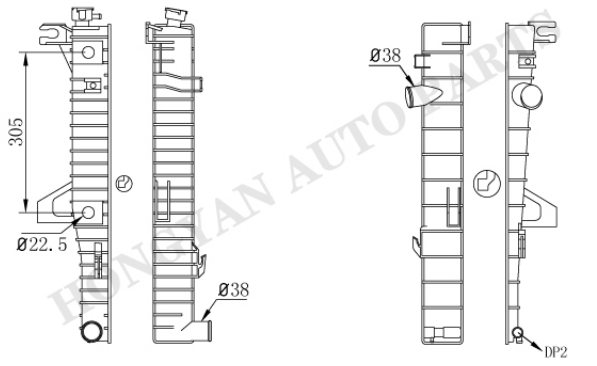

Tank size :(R7×5×5×77×604)
OEM :
DPI :2173
NISSENS :
APPLICATION :
98-01 FORD EXPLORER 4.0L
98-01 FORD F-100 3.0L
98-09 FORD RANGER 3.0/4.0L

FO-0343

FO-0344

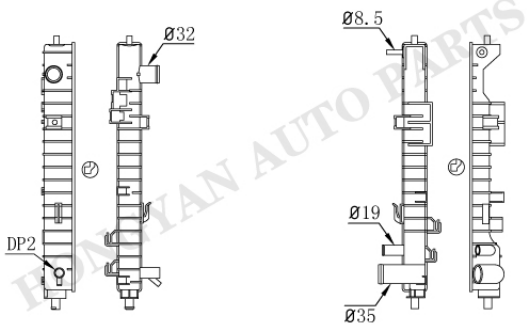

Tank size :(R6.5×5×5×46.5×469)
OEM :5M6Z8005AC
DPI :2762
NISSENS :
APPLICATION :
05-08 FORD ESCAPE 2.3L
06-08 MERCURY MARINER 2.3L
08- MAZDA TRIBUTE 2.3L

FO-0108

FO-0345

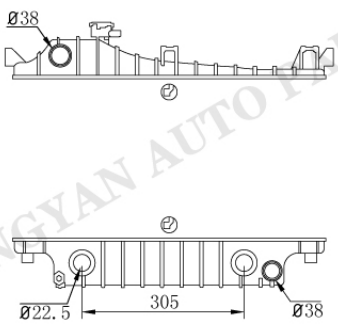

Tank size :(R4.5×4.2×5.4×76×590)
OEM :
DPI :
NISSENS :
APPLICATION :

FO-0346AT/MT

F0:54

HONGYAN AUTO PARTS

FORD/LINCOLN/MERCURY

FO-0347AT/MT

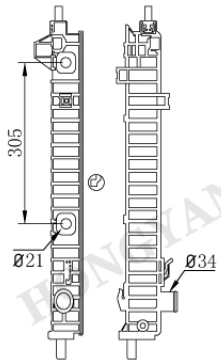

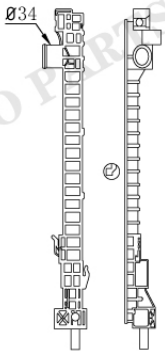

FO-0348

Tank size :(R6.5×5×5.5×77/47×572)
OEM :
DPI :13240
NISSENS :
APPLICATION :
10-11 CADILLAC SRX 3.0L
11- SAAB 9-4X 3.0L

FO-0349AT/MT

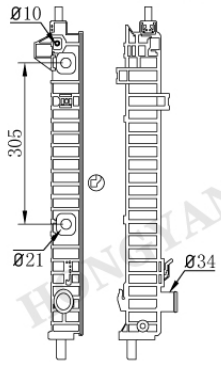

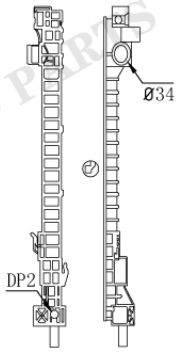

FO-0348

Tank size :(R6.5×5×5.5×77/47×572)
OEM :
DPI :13240
NISSENS :
APPLICATION :
10-11 CADILLAC SRX 3.0L
11- SAAB 9-4X 3.0L

Tank size :
OEM :
DPI :
NISSENS :
APPLICATION :

Tank size :
OEM :
DPI :
NISSENS :
APPLICATION :

HONGYAN AUTO PARTS

	Tank size : OEM : DPI : NISSENS : APPLICATION :
	Tank size : OEM : DPI : NISSENS : APPLICATION :
	Tank size : OEM : DPI : NISSENS : APPLICATION :
	Tank size : OEM : DPI : NISSENS : APPLICATION :

HONGYAN AUTO PARTS

F0:56

	Tank size : OEM : DPI : NISSENS : APPLICATION :
	Tank size : OEM : DPI : NISSENS : APPLICATION :
	Tank size : OEM : DPI : NISSENS : APPLICATION :
	Tank size : OEM : DPI : NISSENS : APPLICATION :

HONGYAN AUTO PARTS

FO:57

FORKLIFT

FL-0001AT/MT

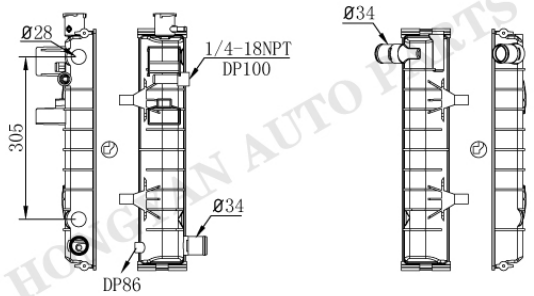

Tank size :(R8×4.2×5×88×452)
OEM :
DPI :
NISSENS :
APPLICATION :
FORKLIFT

FL-0002

FL-0003

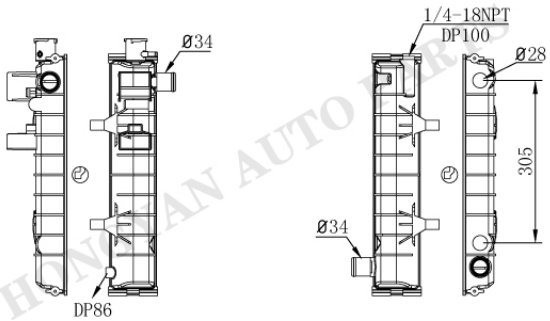

Tank size :(R8×4.2×5×88×452)
OEM :
DPI :
NISSENS :
APPLICATION :
FORKLIFT

FL-0004AT/MT

HONGYAN AUTO PARTS

	Tank size : OEM : DPI : NISSENS : APPLICATION :
	Tank size : OEM : DPI : NISSENS : APPLICATION :
	Tank size : OEM : DPI : NISSENS : APPLICATION :
	Tank size : OEM : DPI : NISSENS : APPLICATION :

HONGYAN AUTO PARTS

GEELY

GE-0001

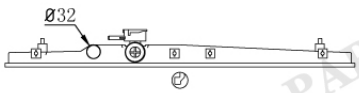

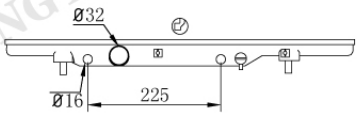

GE-0002AT/MT

Tank size :(R7.5×4.5×5×39×658)
OEM :
DPI :
NISSENS :
APPLICATION :
GEELY FREE CRUISER

GE-0003

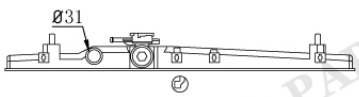

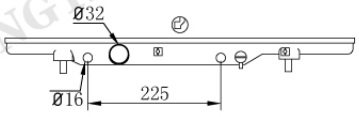

GE-0002AT/MT

Tank size :(R7.5×4×5×33/39×658)
OEM :
DPI :
NISSENS :
APPLICATION :
GEELY

GE-0004

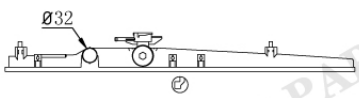

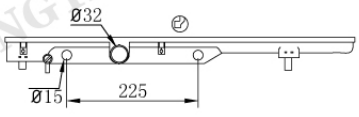

GE-0005AT/MT

Tank size :(R7.5×4×5×32.5/39×659)
OEM :
DPI :
NISSENS :
APPLICATION :
GEELY

GE-0006

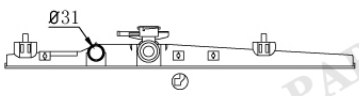

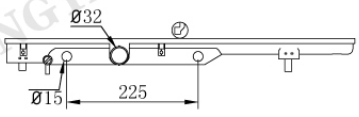

GE-0005AT/MT

Tank size :(R7.5×4×5×39×659)
OEM :
DPI :
NISSENS :
APPLICATION :
GEELY

HONGYAN AUTO PARTS

GE-0007

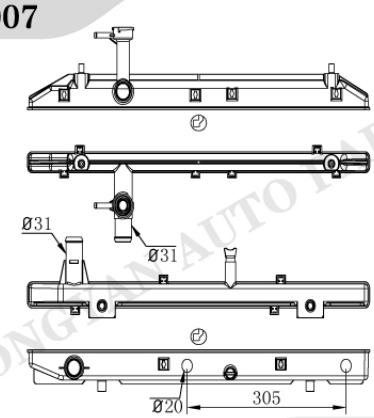

GE-0008AT/MT

Tank size :(R9.5×4.5×4.5×32.5/40×657)
OEM :
DPI :
NISSENS :
APPLICATION :

Tank size :
OEM :
DPI :
NISSENS :
APPLICATION :

Tank size :
OEM :
DPI :
NISSENS :
APPLICATION :

Tank size :
OEM :
DPI :
NISSENS :
APPLICATION :

HONGYAN AUTO PARTS

	Tank size : OEM : DPI : NISSENS : APPLICATION :
	Tank size : OEM : DPI : NISSENS : APPLICATION :
	Tank size : OEM : DPI : NISSENS : APPLICATION :
	Tank size : OEM : DPI : NISSENS : APPLICATION :

HONGYAN AUTO PARTS

CHEVROLET/BUICK/CADILLAC/SATURN/GMC

GM-0001AT/MT

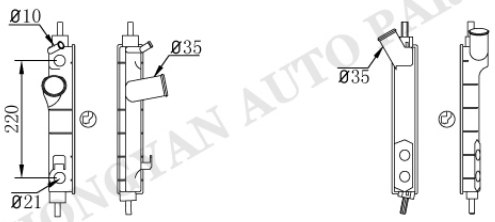

Tank size :(R3.5×5×4.5×48×280)
OEM :92090139/8
DPI :
NISSENS :
APPLICATION :

GM-0002

GM-0003

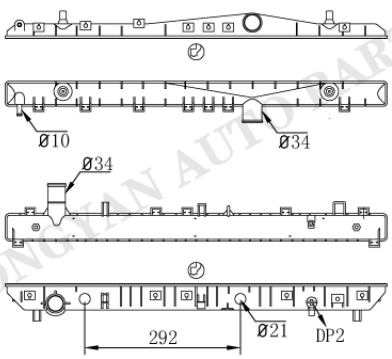

Tank size :(R9×4×5×46/52×717)
OEM :96553243/244/423
DPI :2788
NISSENS :61634
APPLICATION :
04- BUICK EXCELLE 1.6/1.8L
04- CHEVROLET LACETTI 1.6/1.8L
03- CHEVROLET NUBIRA 1.6/1.8L
03- SUZKI FORDNZA 1.6/1.8L

GM-0004AT/MT

GM-0005

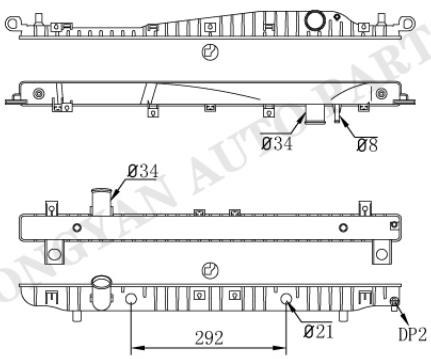

Tank size :(R9×4×5×46/51×717)
OEM :
DPI :
NISSENS :
APPLICATION :

GM-0006AT/MT

GM-0005-1

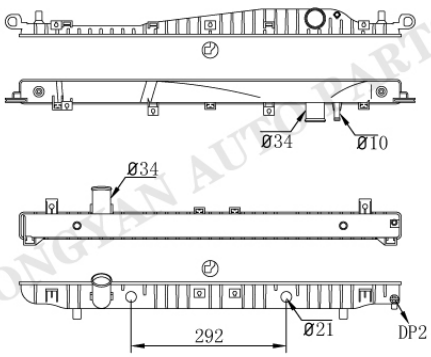

Tank size :(R9×4×5×46/51×717)
OEM :
DPI :
NISSENS :
APPLICATION :

GM-0006-1AT/MT

GM-1

CHEVROLET/BUICK/CADILLAC/SATURN/GMC

GM-0007

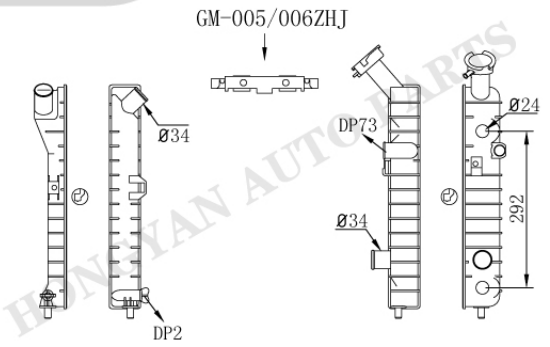

GM-0008AT/MT

Tank size :(R5×5.5×5×58×417)
OEM :52472846/65
DPI :1887 1888 1889 1890 1893 1894 2342 2351
NISSENS :691051
APPLICATION :
97-99 BUICK REGAL 3.8L
97-99 BUICK CENTURY 3.1/3.8L
97-00 CHEVROLET VENTURE 3.4L

GM-0007

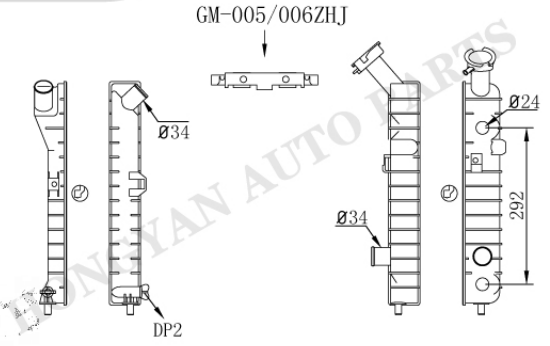

GM-0008-1AT/MT

Tank size :(R5×5.5×5×58×417)
OEM :
DPI :
NISSENS :
APPLICATION :
97-99 BUICK REGAL 3.8L
97-99 BUICK CENTURY 3.1/3.8L
97-00 CHEVROLET VENTURE 3.4L

GM-0007

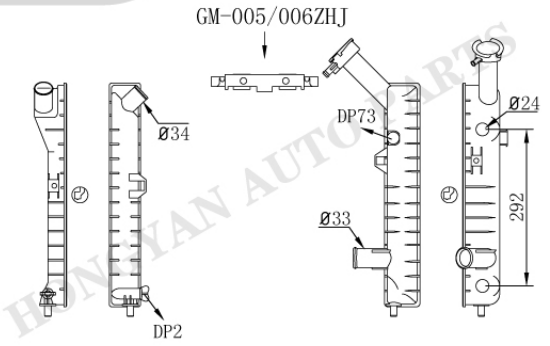

GM-0009AT/MT

Tank size :(R5×5.5×5×58×417)
OEM :
DPI :
NISSENS :
APPLICATION :

GM-0010

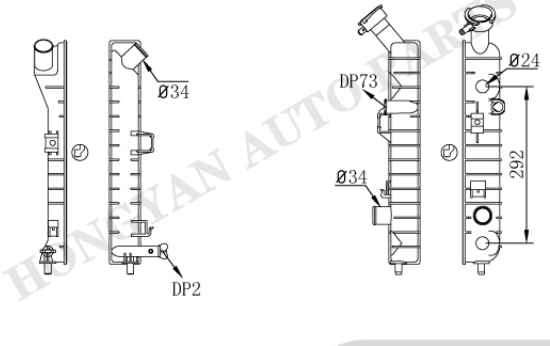

GM-0011AT/MT

Tank size :(R5×6×5×58×417)
OEM :52381096
DPI :2516
NISSENS :
APPLICATION :
00-05 BUICK CENTURY 3.1L
00-05 BUICK REGAL 3.8L
00-05 CHEVROLET IMPALA 3.8L
00-05 CHEVROLET NONTE CARLO 3.4L

HUNGYAN AUTO PARTS

CHEVROLET/BUICK/CADILLAC/SATURN/GMC

GM-0012AT/MT

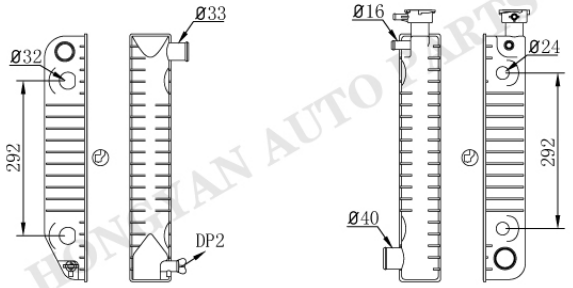

GM-0013AT/MT

Tank size :(R5×6×5×77×465)
OEM :52460847/7217
DPI :624 1360 1520 1522
NISSENS :
APPLICATION :
99-00 CADILLAC ESCALADE 5.7L
88-04 CHEVROLET K150/250 5.7L
88-04 CHEVROLET C150/250 5.7L

GM-0012AT/MT

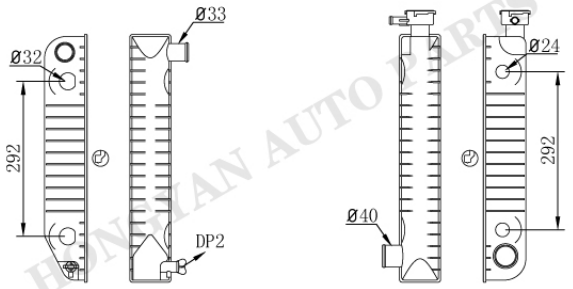

GM-0013-1AT/MT

Tank size :(R5×6×5×77×465)
OEM :52467232/9471
DPI :1693 1694 1792
NISSENS :
APPLICATION :
99-00 CADILLAC ESCALADE 5.7L
88-04 CHEVROLET K150/250 5.7L
88-04 CHEVROLET C150/250 5.7L

GM-0012AT/MT

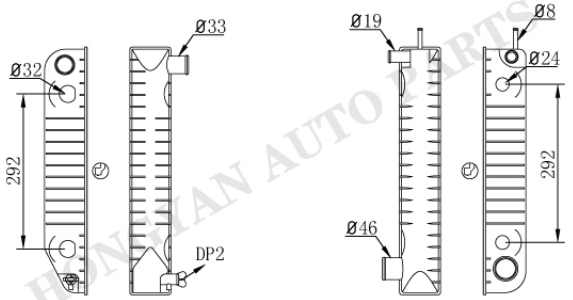

GM-0014AT/MT

Tank size :(R5×6×5×77×465)
OEM :15766917
DPI :2043
NISSENS :
APPLICATION :
96-02 CHEVROLET EXPRESS 6.5L
96-02 GMC SAVANA 6.5L

GM-0015

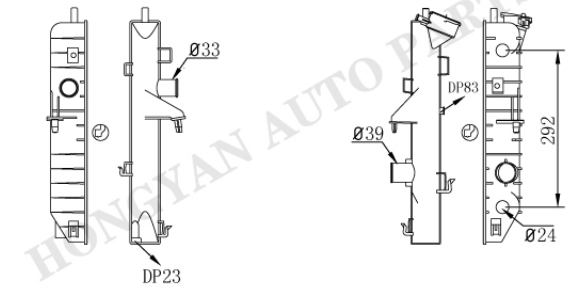

GM-0016AT/MT

Tank size :(R5×6×5×58×417)
OEM :52487030
DPI :2347 2348
NISSENS :
APPLICATION :
00-05 BUICK LESBRE 3.8L

HONGYAN AUTO PARTS

CHEVROLET/BUICK/CADILLAC/SATURN/GMC

GM-0017AT/MT

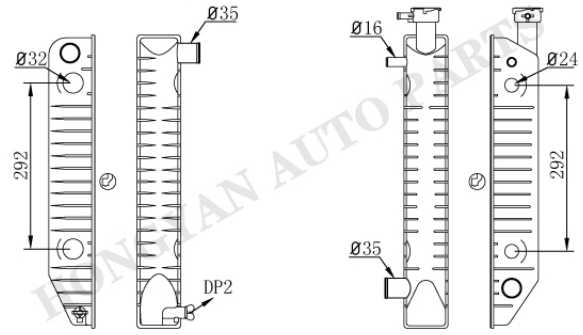

GM-0018AT/MT

Tank size :(R5×6×5×77×521)
OEM :
DPI :1521 1543 1545 1795
NISSENS :
APPLICATION :
94-99 CHEVROLET K2500/3500 7.4L
94-99 CHEVROLET C2500/3500 7.4L

GM-0017AT/MT

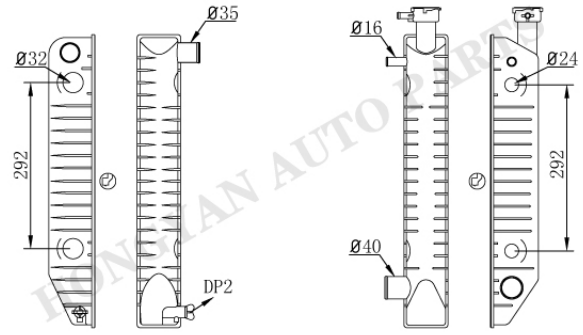

GM-0018-1AT/MT

Tank size :(R5×6×5×77×521)
OEM :
DPI :
NISSENS :
APPLICATION :
94-99 CHEVROLET K2500/3500 7.4L
94-99 CHEVROLET C2500/3500 7.4L

GM-0017AT/MT

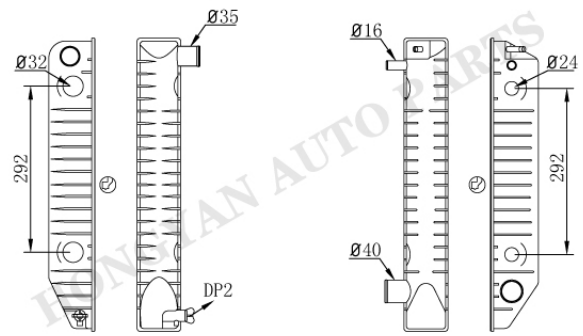

GM-0019AT/MT

Tank size :(R5×6×5×77×521)
OEM :52460853/7215/9436
DPI :1218 1696 1524
NISSENS :
APPLICATION :
92-93 CHEVROLET K2500/3500 7.4L
92-93 CHEVROLET C2500/3500 7.4L

GM-0017-1AT/MT

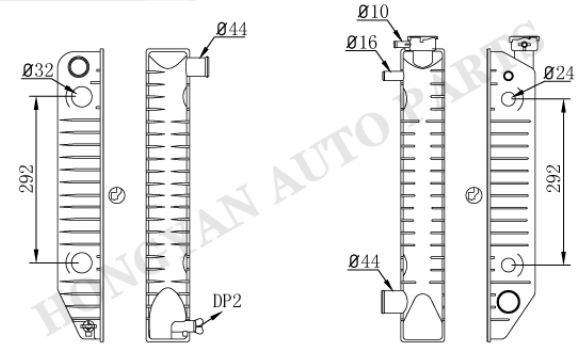

GM-0020AT/MT

Tank size :(R5×6×5×77×521)
OEM :524608678/9/7214/9437
DPI :1523 1720 1793 1808 1809
NISSENS :
APPLICATION :
94-02 CHEVROLET K1500/2500 6.5L
94-02 CHEVROLET C1500/2500 6.5L

HUNGHAN AUTO PARTS

CHEVROLET/BUICK/CADILLAC/SATURN/GMC

GM-0021AT/MT

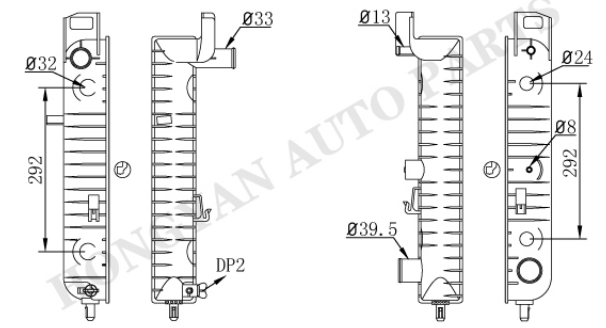

GM-0022AT/MT

Tank size :(R5×6×5×77×465)
OEM :15193114/5/43107
DPI :2370 2371 2423
NISSENS :
APPLICATION :
02-11 CADILLAC SCALADE 6.2L
99-11 CHEVROLET SILVERADO 5.3L
99-11 CHEVROLET SUBURBAN 6.0L
99-11 CHEVROLET AVALANCHE 5.3L
99-11 CHEVROLET TAHOE 5.3L
03-09 HUMMER H2 6.0/6.2L

GM-0021-1AT

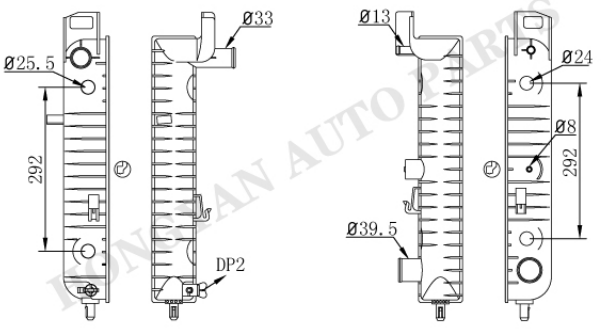

GM-0022AT/MT

Tank size :(R5×6×5×77×465)
OEM :
DPI :
NISSENS :
APPLICATION :
02-11 CADILLAC SCALADE 6.2L
99-11 CHEVROLET SILVERADO 5.3L
99-11 CHEVROLET SUBURBAN 6.0L
99-11 CHEVROLET AVALANCHE 5.3L
99-11 CHEVROLET TAHOE 5.3L
03-09 HUMMER H2 6.0/6.2L

GM-0023AT/MT

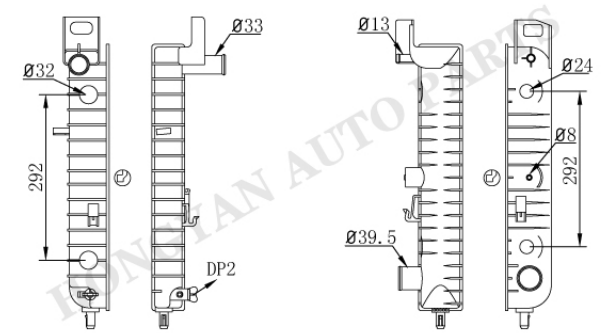

GM-0024AT/MT

Tank size :(R5×6×5×58×465)
OEM :15193113/2/1
DPI :2366 2367 2368 2334
NISSENS :
APPLICATION :
05-11 CADILLAC ESCALADE 5.3L
99-12 CHEVROLET SILVERADO 4.8/5.3L
99-12 CHEVROLET SUBURBAN 4.8/5.3L
99-12 CHEVROLET TAHOE 5.3L

GM-0025AT/MT

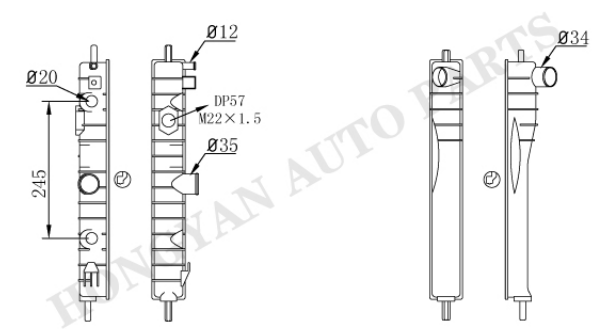

GM-0026

Tank size :(R5×6×5×58×417)
OEM :309041314/4273
DPI :781 1040 1253
NISSENS :
APPLICATION :
88-93 PONTIAC LEMANS 1.6L

HONGYAN AUTO PARTS

CHEVROLET/BUICK/CADILLAC/SATURN/GMC

GM-0027

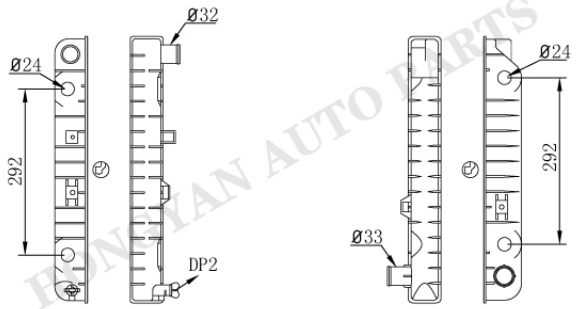

GM-0028AT/MT

Tank size :(R5×6×5×58×472)
OEM :52467762
DPI :1517
NISSENS :
APPLICATION :
94-96 BUICK ROADMASTER 5.7L
94-95 BUICK COMMERCIAL CHASSIS 5.7L
94-96 CADILLAC FLEETWOOD 5.7L
94-96 CHEVROLET IMPALA 5.7L
94-96 CHEVROLET CAPRICE 5.7L

GM-0029

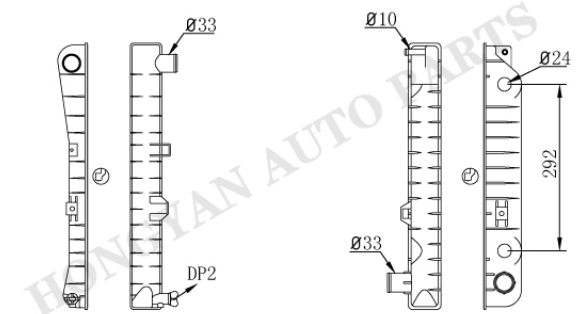

GM-0030AT/MT

Tank size :(R5×6×5×58×472)
OEM :52467761/51115/6
DPI :1516
NISSENS :
APPLICATION :
94-96 BUICK ROADMASTER 5.7L
94-95 BUICK COMMERCIAL CHASSIS 5.7L
94-96 CADILLAC FLEETWOOD 5.7L
94-96 CHEVROLET IMPALA 5.7L
94-96 CHEVROLET CAPRICE 4.3L

GM-0031AT/MT

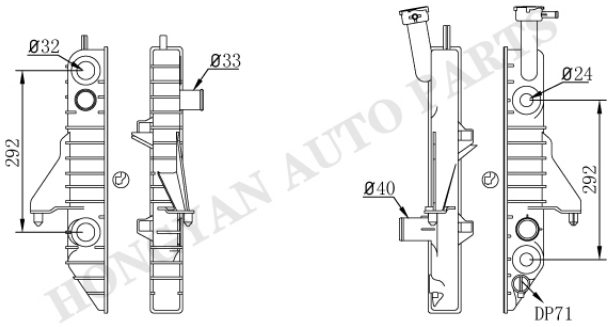

GM-0032AT/MT

Tank size :(R5×6×5×58×472)
OEM :52472906
DPI :1786 2003
NISSENS :
APPLICATION :
96-05 CHEVROLET ASTRO 4.3L
96-05 GMC SAFARI 4.3L

GM-0031-1AT/MT

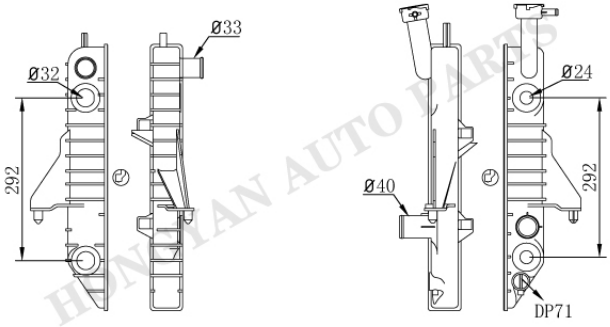

GM-0032AT/MT

Tank size :(R5×6×5×58×472)
OEM :52458028/60410
DPI :1688 1803
NISSENS :
APPLICATION :
95- CHEVROLET ASTRO 4.3L
95- CHEVROLET ASTRO 4.3L

HUNTIAN AUTO PARTS

CHEVROLET/BUICK/CADILLAC/SATURN/GMC

GM-0033AT/MT

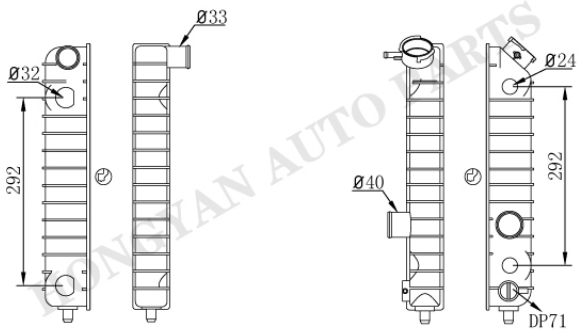

GM-0034AT/MT

Tank size :(R5×6×5×58×417)
OEM :52472963
DPI :1825 1826
NISSENS :
APPLICATION :
96-05 CHEVROLET BLAZER 4.3L
96-05 GMC JIMMY 4.3L
96-05 GMC SONOMA 4.3L

GM-0035AT/MT

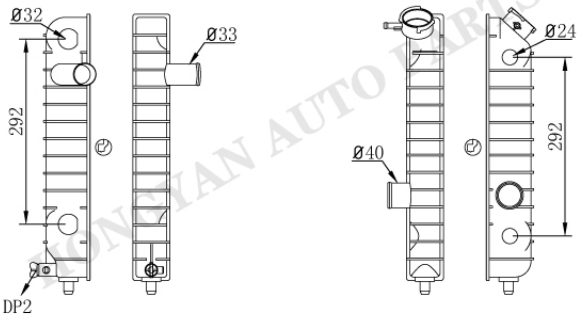

GM-0036AT/MT

Tank size :(R5×6×5×58×417)
OEM :52462546/7/8/9
DPI :1532 1533 1878
NISSENS :
APPLICATION :
94-95 CHEVROLET S10 4.3L
94-95 CHEVROLET BLAZER 4.3L
94-95 GMC JIMMY 4.3L
94-95 GMC SONOMA 4.3L

GM-0035AT/MT

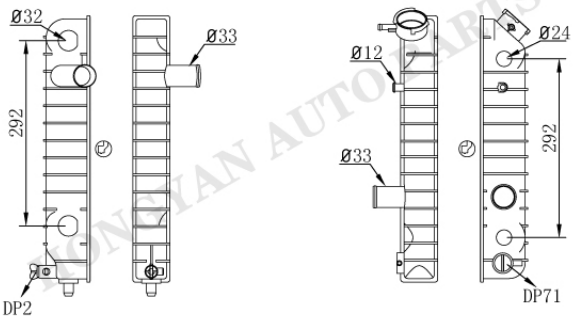

GM-0036-1AT/MT

Tank size :(R5×6×5×58×417)
OEM :
DPI :
NISSENS :
APPLICATION :

GM-0035AT/MT

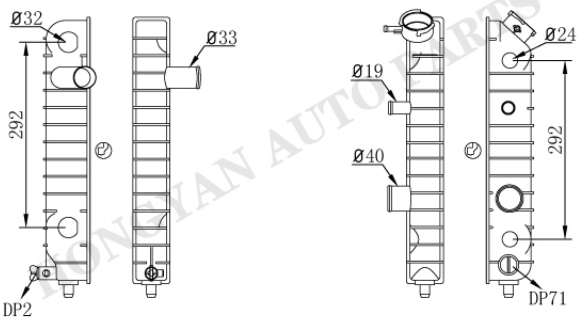

GM-0036-2AT/MT

Tank size :(R5×6×5×58×417)
OEM :
DPI :
NISSENS :
APPLICATION :

CHEVROLET/BUICK/CADILLAC/SATURN/GMC

GM-0037AT/MT

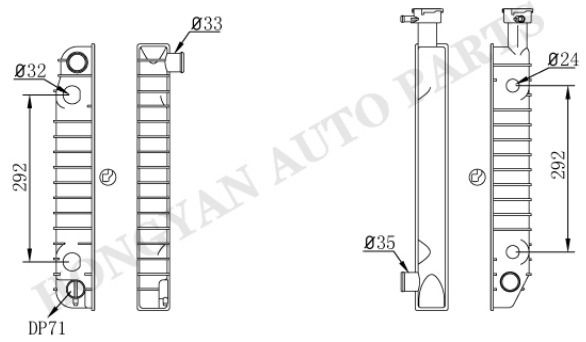

GM-0038AT/MT

Tank size :(R5×6×5×58×472)
OEM :52460728
DPI :1476
NISSENS :
APPLICATION :
92-96 CHEVROLET LUMINA VAN/APV 3.8L
92-95 OLDSMOBILE SILHOUETTE 3.8L
92-95 PONTIAC TRANS SPORT 3.8L

GM-0037-1AT

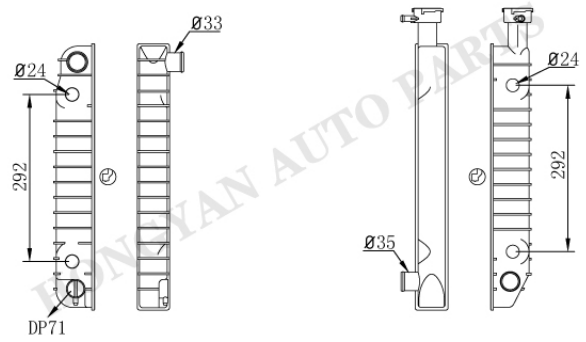

GM-0038AT/MT

Tank size :(R5×6×5×58×472)
OEM :52456258
DPI :1475
NISSENS :
APPLICATION :
92-96 CHEVROLET LUMINA VAN/APV 3.8L
92-95 OLDSMOBILE SILHOUETTE 3.8L
92-95 PONTIAC TRANS SPORT 3.8L

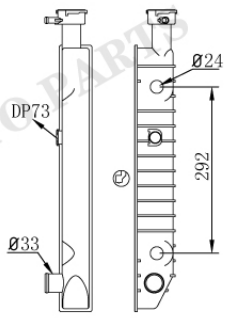

GM-0038-1AT/MT

Tank size :(R5×6×5×58×472)
OEM :
DPI :
NISSENS :
APPLICATION :

GM-0037AT/MT

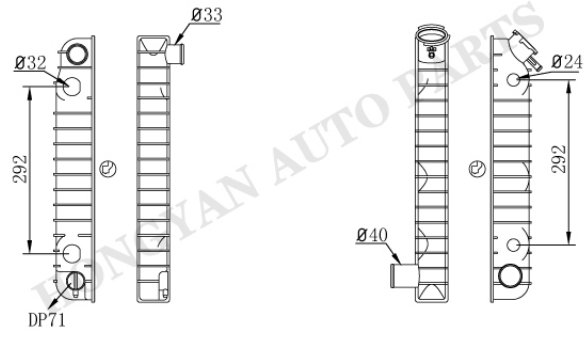

GM-0040AT/MT

Tank size :(R5×6×5×58×472)
OEM :
DPI :769 856 1053 1056 1067
1208 1222 1238 1376 1471
1474 1493 1536 1546
NISSENS :
APPLICATION :
91-96 BUICK PARD AVENUE 3.8L
91-96 BUICK LESABRE 3.8L

HONGYAN AUTO PARTS

CHEVROLET/BUICK/CADILLAC/SATURN/GMC

GM-0037-1AT

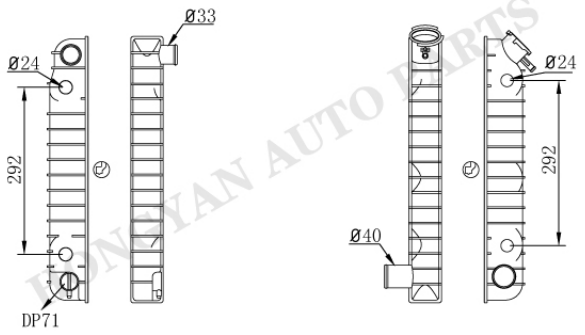

GM-0040AT/MT

Tank size :(R5×6×5×58×472)
OEM :52452672/3
DPI :1046 1047 1054 1067 1347 1348
NISSENS :
APPLICATION :
92-95 CHEVROLET LUMINA APV 3.1L

GM-0037AT/MT

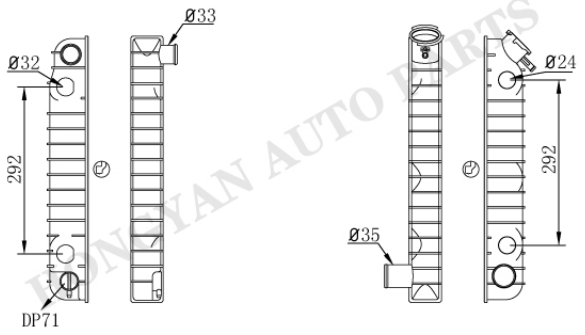

GM-0041AT/MT

Tank size :(R5×6×5×58×472)
OEM :
DPI :778 1048
NISSENS :
APPLICATION :
91-96 BUICK PARD AVENUE 3.8L
91-96 BUICK LESABRE 3.8L

GM-0037AT/MT

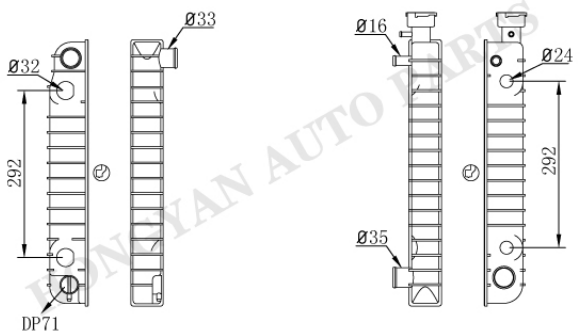

GM-0042AT/MT

Tank size :(R5×6×5×58×472)
OEM :
DPI :1490 1491
NISSENS :
APPLICATION :

GM-0037AT/MT

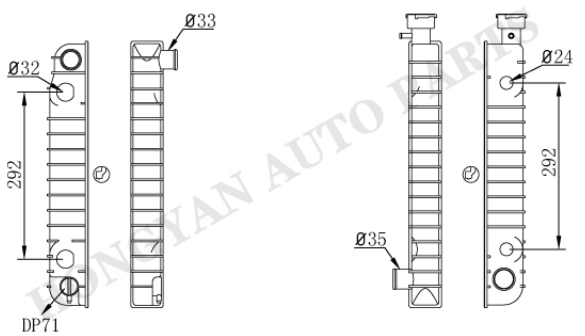

GM-0042-1AT/MT

Tank size :(R5×6×5×58×472)
OEM :
DPI :1689
NISSENS :
APPLICATION :

HONGYAN AUTO PARTS

CHEVROLET/BUICK/CADILLAC/SATURN/GMC

GM-0037AT/MT

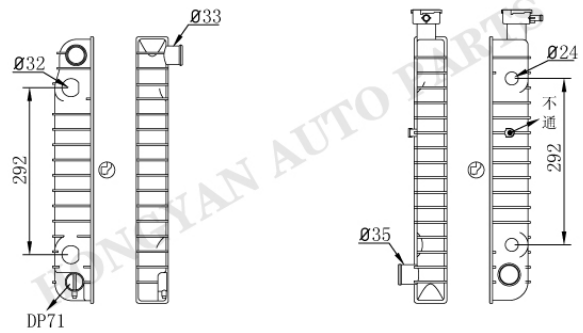

GM-0043AT/MT

Tank size :(R5×6×5×58×472)
OEM :
DPI :1706 1785 1804
NISSENS :
APPLICATION :

GM-0037AT/MT

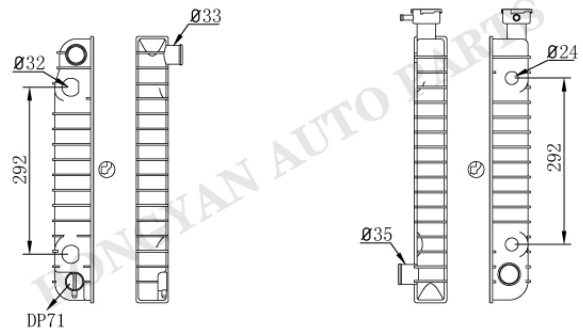

GM-0044AT/MT

Tank size :(R5×6×5×58×472)
OEM :
DPI :1691 1788 1790
NISSENS :
APPLICATION :

GM-0045AT/MT

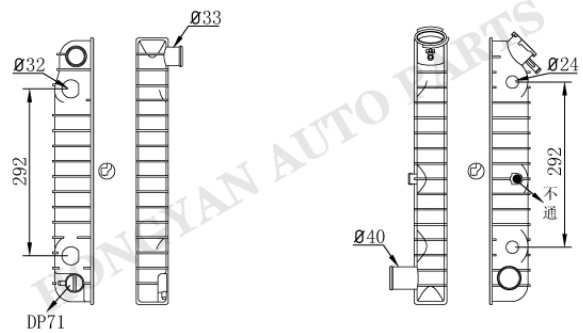

GM-0046AT/MT

Tank size :(R5×6×5×58×472)
OEM :
DPI :1305 1203 1535 1796 1802
NISSENS :
APPLICATION :

GM-0045AT/MT

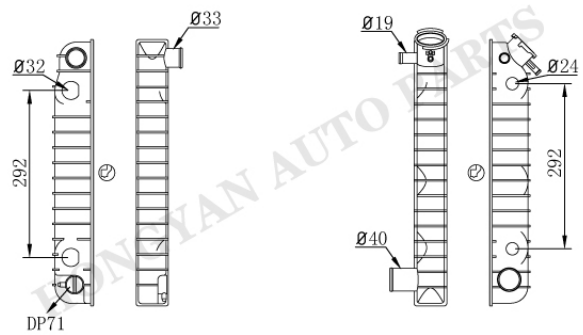

GM-0047AT/MT

Tank size :(R5×6×5×58×472)
OEM :
DPI :
NISSENS :
APPLICATION :

GM-10

CHEVROLET/BUICK/CADILLAC/SATURN/GMC

GM-0045AT/MT

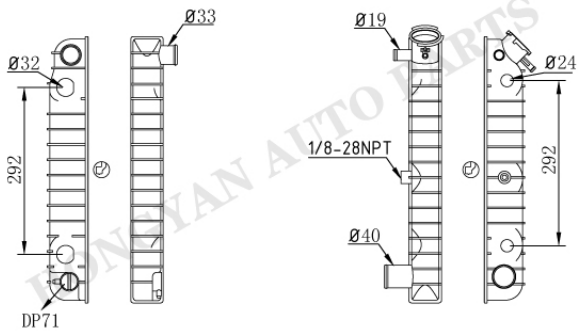

GM-0048AT/MT

Tank size :(R5×6×5×58×472)
OEM :
DPI :
NISSENS :
APPLICATION :

GM-0045AT/MT

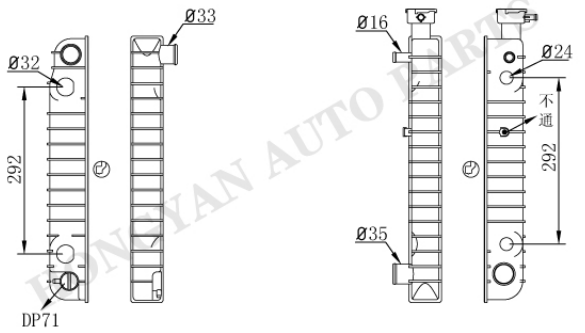

GM-0049AT/MT

Tank size :(R5×6×5×58×472)
OEM :
DPI :1366 1386 1470 1489
NISSENS :
APPLICATION :

GM-0045AT/MT

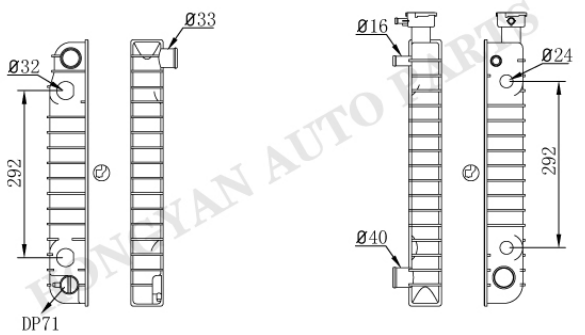

GM-0050AT/MT

Tank size :(R5×6×5×58×472)
OEM :
DPI :621 622 677 1539 1540
NISSENS :
APPLICATION :

GM-0045-1AT

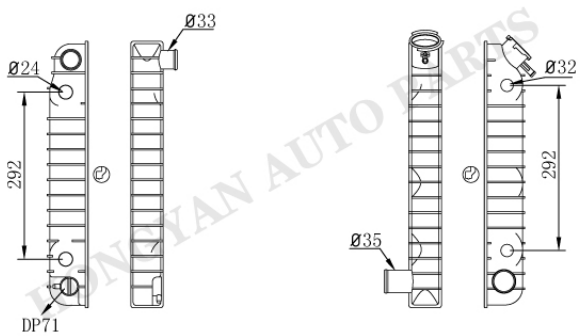

GM-0051AT/MT

Tank size :(R5×6×5×58×472)
OEM :3053985
DPI :855
NISSENS :
APPLICATION :

HONGYAN AUTO PARTS

CHEVROLET/BUICK/CADILLAC/SATURN/GMC

GM-0045-1AT

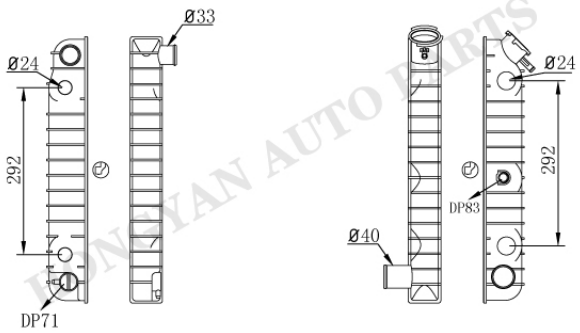

Tank size :(R5×6×5×58×472)
OEM :3058195/6
DPI :854 908
NISSENS :
APPLICATION :

GM-0052AT/MT

GM-0045-1AT

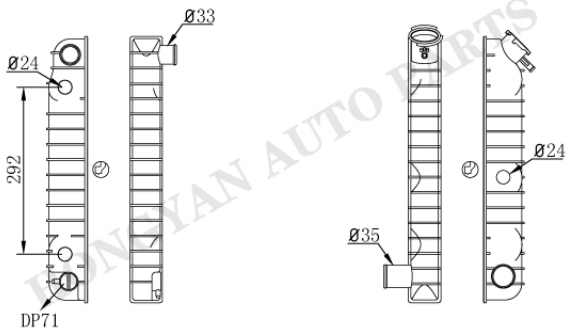

Tank size :(R5×6×5×58×472)
OEM :3090378/93/94/96
DPI :852 853 953
NISSENS :
APPLICATION :
85-87 BUICK LESABRE 3.0/3.8L

GM-0053

GM-0045-1AT

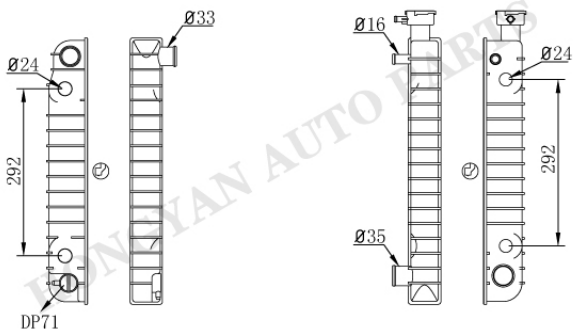

Tank size :(R5×6×5×58×472)
OEM :
DPI :1358
NISSENS :
APPLICATION :

GM-0054AT/MT

GM-0055

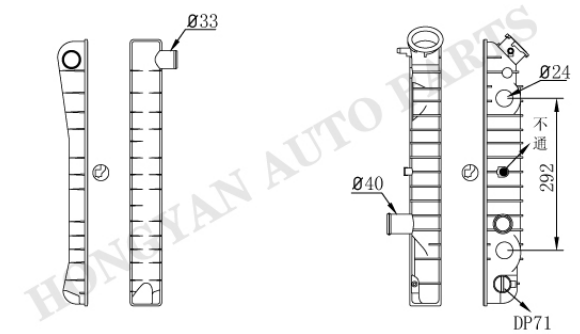

Tank size :(R5×6×5×58×472)
OEM :
DPI :965
NISSENS :
APPLICATION :
82-86 CHEVROLET CAMARO 2.5/5.0L
82-86 PONTIAC FIREBIRD 2.5L

GM-0056AT/MT

GM-12

HUNGYAN AUTO PARTS

CHEVROLET/BUICK/CADILLAC/SATURN/GMC

GM-0055

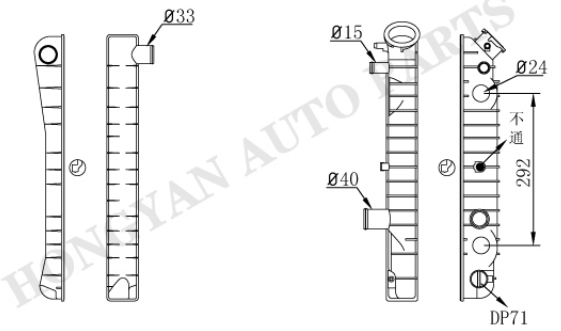

GM-0057AT/MT

Tank size :(R5×6×5×58×472)
OEM :3092164
DPI :951 1092
NISSENS :
APPLICATION :
82-92 CHEVROLET CAMARO 3.1/5.0/5.7L
89-90 GMC P3500 5.7L
82-92 PONTIAC FIREBIRD 3.1/5.0/5.7L

GM-0055

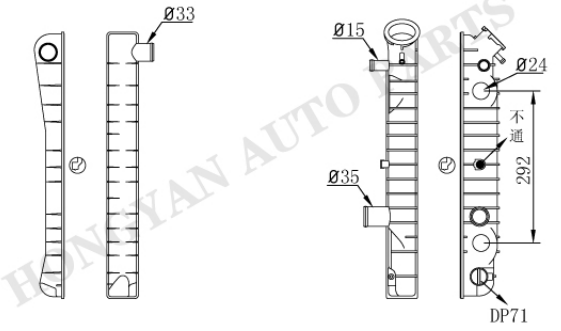

GM-0058AT/MT

Tank size :(R5×6×5×58×472)
OEM :
DPI :
NISSENS :
APPLICATION :

GM-0055

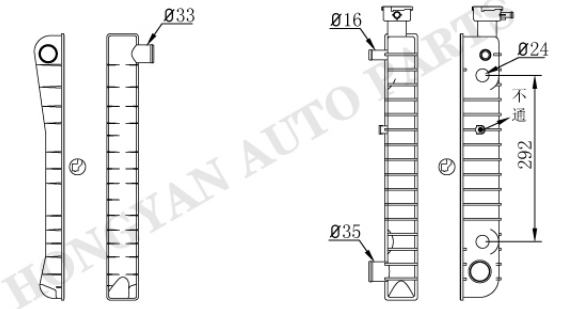

GM-0049AT/MT

Tank size :(R5×6×5×58×472)
OEM :
DPI :1467 1477
NISSENS :
APPLICATION :
92-96 CHEVROLET G10/20/30 5.7L
96- CHEVROLET EXPRESS 5.7L

GM-0059

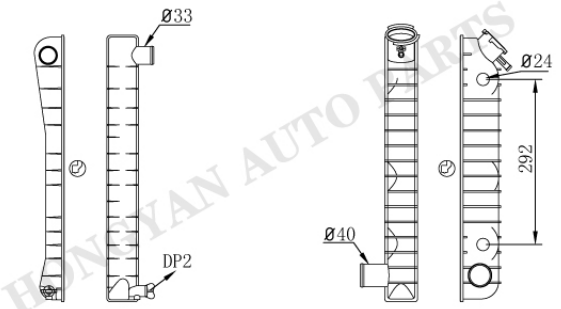

GM-0040AT/MT

Tank size :(R5×6×5×58×472)
OEM :3091025
DPI :158 767 921 1204 1473
1684 2014
NISSENS :
APPLICATION :

CHEVROLET/BUICK/CADILLAC/SATURN/GMC

GM-0059

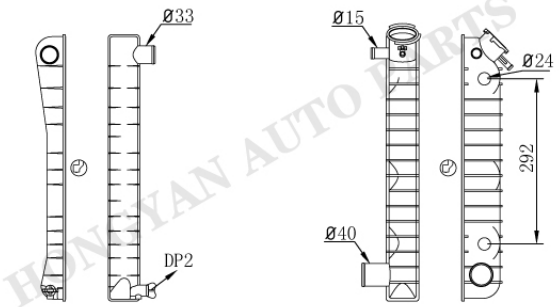

GM-0060AT/MT

Tank size :(R5×6×5×58×472)
OEM :5246532/4
DPI :726 727 954 1372
1528 1770
NISSENS :
APPLICATION :
94- CHEVROLET P30 4.3L
94- GMC P3500 4.3L

GM-0059

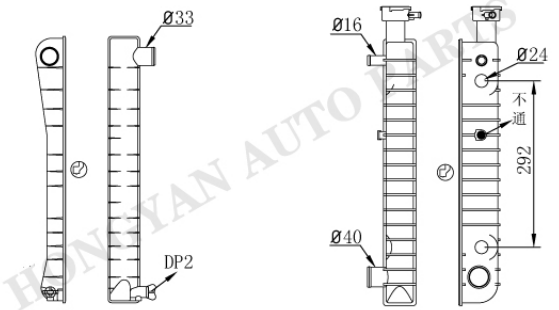

GM-0061AT/MT

Tank size :(R5×6×5×58×472)
OEM :
DPI :1370
NISSENS :
APPLICATION :

GM-0062

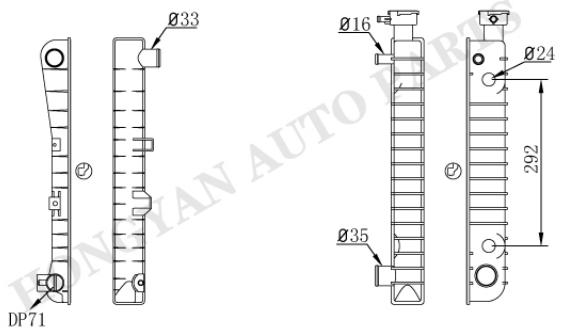

GM-0054AT/MT

Tank size :(R5×6×5×58×472)
OEM :
DPI :1352
NISSENS :
APPLICATION :

GM-0063

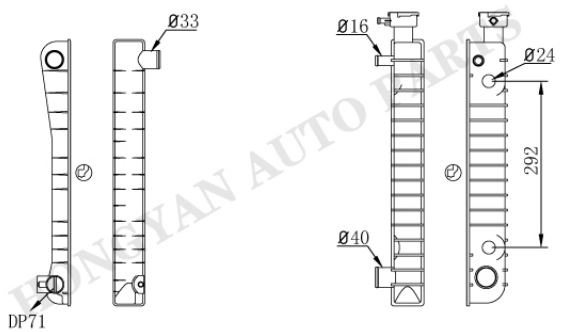

GM-0050AT/MT

Tank size :(R5×6×5×58×472)
OEM :
DPI :434 616 617 618 619
620 631 1595
NISSENS :
APPLICATION :

GM-14

HUNYAN AUTO PARTS

CHEVROLET/BUICK/CADILLAC/SATURN/GMC

GM-0063

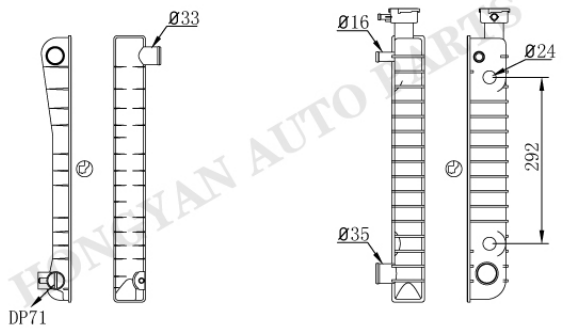

GM-0054AT/MT

Tank size :(R5×6×5×58×472)
OEM :
DPI :1353 1354
NISSENS :
APPLICATION :

GM-0063

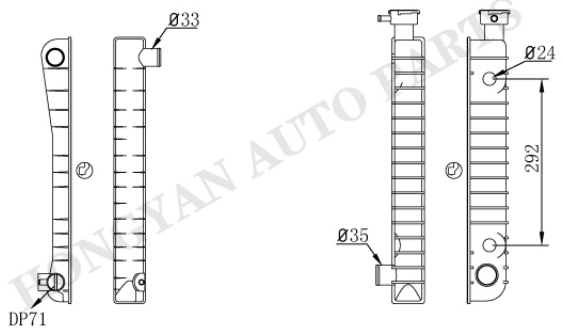

GM-0064AT/MT

Tank size :(R5×6×5×58×472)
OEM :
DPI :1690 1692 1789 1791
NISSENS :
APPLICATION :

GM-0065

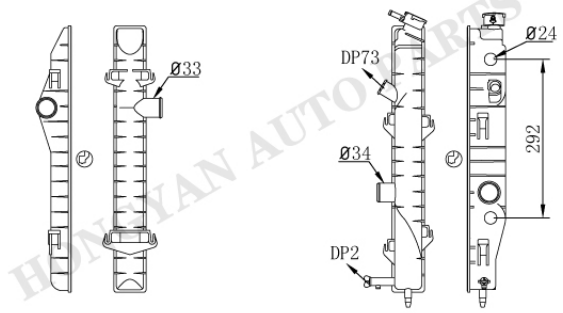

GM-0066AT/MT

Tank size :(R5×6×5×58×472)
OEM :52452847/8 52466001/2
DPI :1485 2353 2365 2471
2472 2475
NISSENS :
APPLICATION :
93-02 CHEVROLET CAMARO 3.4/3.8L
93-02 PONTIAC FIREBIRD 3.4/3.8L

GM-0067

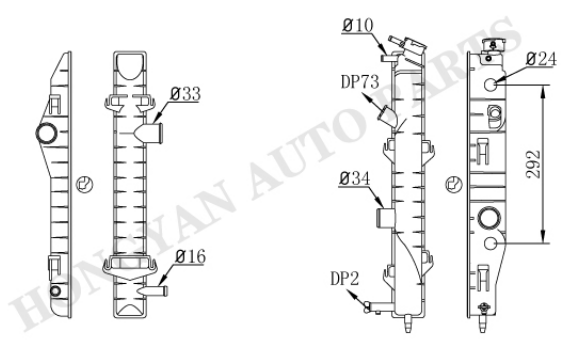

GM-0068AT/MT

Tank size :(R5×6×5×58×472)
OEM :52458219/20 5266003/4
DPI :1486
NISSENS :
APPLICATION :
93-02 CHEVROLET CAMARO 5.7L
93-02 PONTIAC FIREBIRD 5.7L

CHEVROLET/BUICK/CADILLAC/SATURN/GMC

GM-0069

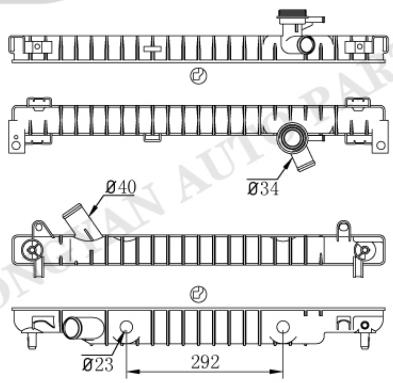

GM-0070AT/MT

Tank size :(R10.5×5×4.5×56×695)
OEM :52485546
DPI :2458
NISSENS :
APPLICATION :
04-07 BUICK RAINIER 4.2L
02-09 CHEVROLET TRAILBLAZER 4.2L
02-09 GMC ENVOY 4.2L
03-08 ISUZU ASCENDER 4.2L
02-04 OLDSMOBILE BRAVADA 4.2L
05-09 SAAB 9-7X 4.2L

GM-0071

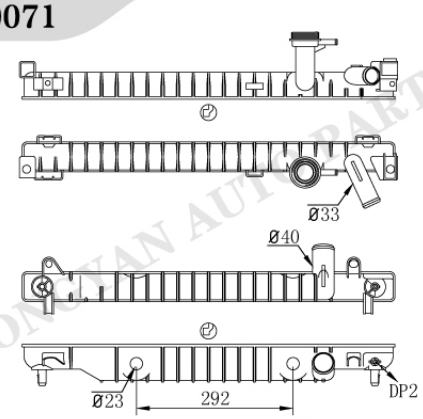

GM-0072AT/MT

Tank size :(R10.5×5×4.5×56×695)
OEM :15162213
DPI :2563
NISSENS :
APPLICATION :
04-07 BUICK RAINIER 5.3L
02-09 CHEVROLET TRAILBLAZER 5.3L
02-09 GMC ENVOY 5.3L
03-08 ISUZU ASCENDER 5.3L
02-04 OLDSMOBILE BRAVADA 5.3L
05-09 SAAB 9-7X 5.3L

GM-0073

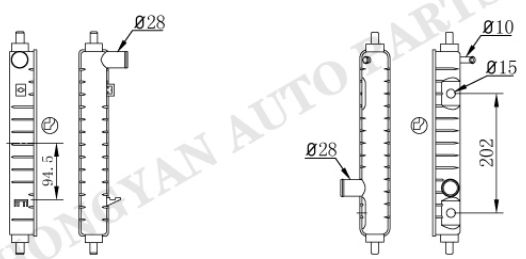

GM-0074AT/MT

Tank size :(R10.5×4×5×51×317)
OEM :96314162
DPI :
NISSENS :61653
APPLICATION :
98- MATIZ 0.8L

GM-0075

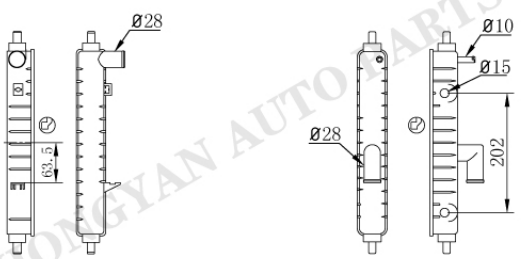

GM-0076AT/MT

Tank size :(R10.5×4×5×51×317)
OEM :96322941
DPI :
NISSENS :61646
APPLICATION :
01- MATIZ 0.8/1.0L

HONGYAN AUTO PARTS

CHEVROLET/BUICK/CADILLAC/SATURN/GMC

GM-0077AT/MT

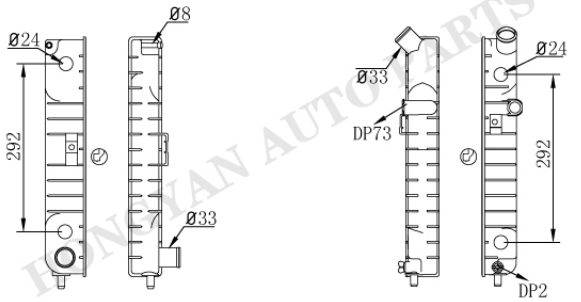

GM-0078AT/MT

Tank size :(R5×6×5×58×417)
OEM :
DPI :
NISSENS :
APPLICATION :

GM-0079AT/MT

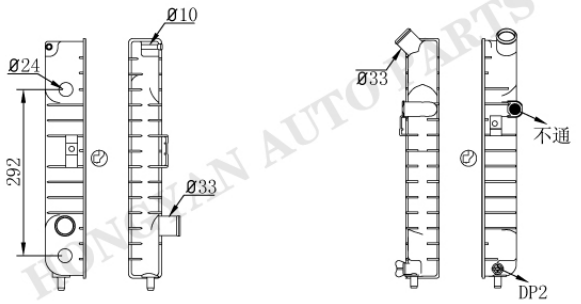

GM-0080

Tank size :(R5×6×5×58×417)
OEM :
DPI :
NISSENS :
APPLICATION :

GM-0081AT/MT

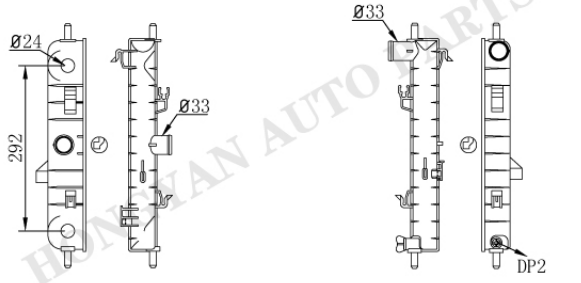

GM-0082

Tank size :(R4.5×5.5×5×50.5×376.5)
OEM :52387630 52482167
DPI :2608
NISSENS :69461
APPLICATION :
05-10 CHEVROLET COBALT 2.2/2.4L
05-10 PONTIAC G5 2.2L
03-07 SATURN LON 2.2/2.4L

GM-0083AT/MT

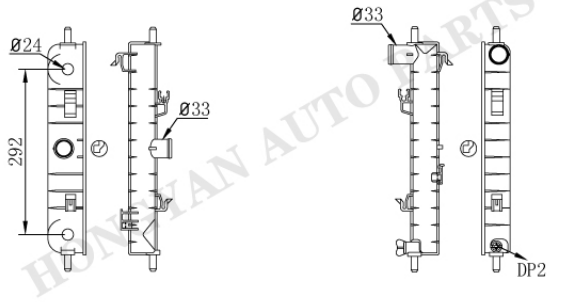

GM-0084

Tank size :(R4.5×5.5×5×50.5×376.5)
OEM :
DPI :2765 2864
NISSENS :
APPLICATION :
04-08 CHEVROLET MALIBU 2.2L

HONGYAN AUTO PARTS

CHEVROLET/BUICK/CADILLAC/SATURN/GMC

GM-0085

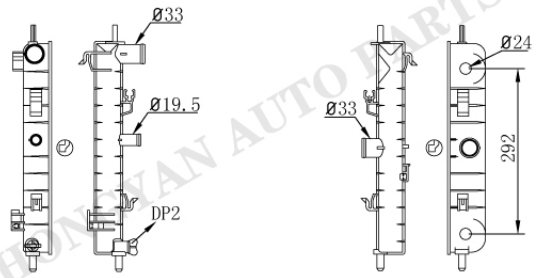

GM-0086AT/MT

Tank size :(R4.5×5.5×5×50.5×376.5)
OEM :52494386
DPI :2727
NISSENS :
APPLICATION :
04-10 CHEVROLET MALIBU 3.5/3.9L

GM-0087AT/MT

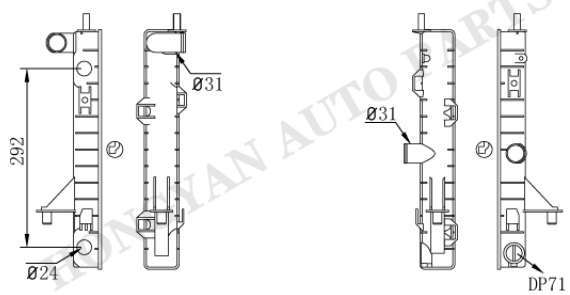

GM-0088

Tank size :(R9×5×5×58×390.5)
OEM :52474360
DPI :1422 2191
NISSENS :
APPLICATION :
91-93 SATURN 1.9L

GM-0089

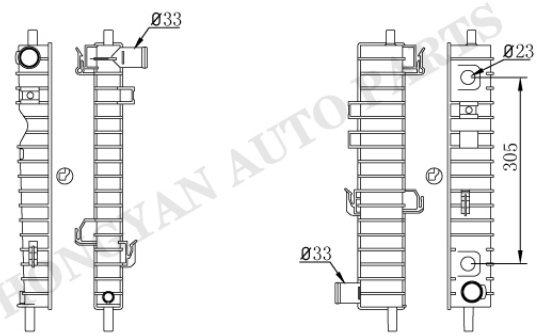

GM-0090AT/MT

Tank size :(R6.5×5×5×46/77×436)
OEM :15246426 22722595
DPI :2764
NISSENS :
APPLICATION :
05- CHEVROLET EQUINOX 3.4L

GM-0091

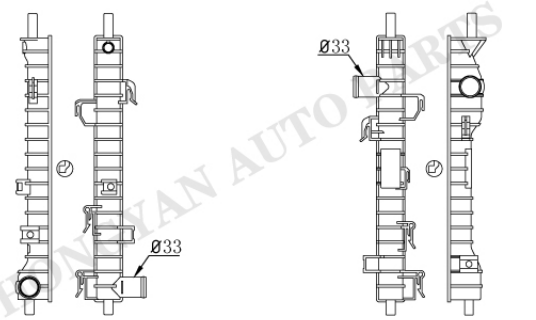

GM-0092

Tank size :(R4.5×5×5×46×436)
OEM :15246275
DPI :2462 2463 2799
NISSENS :
APPLICATION :
02-04 SATURN VUE 2.2/3.0L

GM-18

CHEVROLET/BUICK/CADILLAC/SATURN/GMC

GM-0093AT/MT

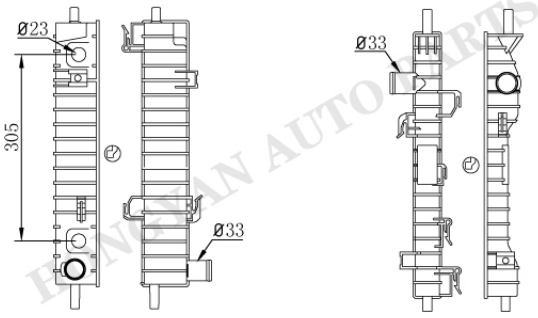

GM-0092

Tank size :(R4.5×5×5×46×436)
OEM :15821838
DPI :
NISSENS :
APPLICATION :
04-07 SATURN VUE

GM-0094

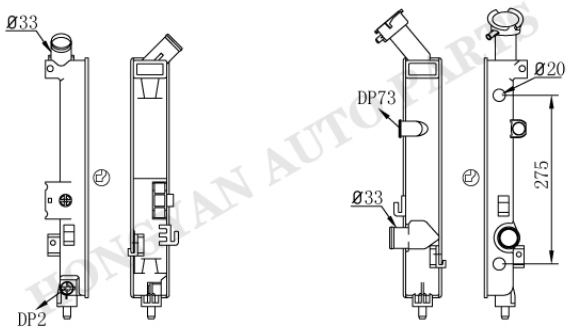

GM-0095AT/MT

Tank size :(R4.5×5×5×62.5×390.5)
OEM :1031317/8
DPI :2562
NISSENS :
APPLICATION :
02-07 BUICK TERRAZA 3.5L
02-07 BUICK RENDEZVOUS 3.5L
02-07 CHEVROLET UPLANDER 3.5L
02-07 CHEVROLET VENTURE 3.5L

GM-0094

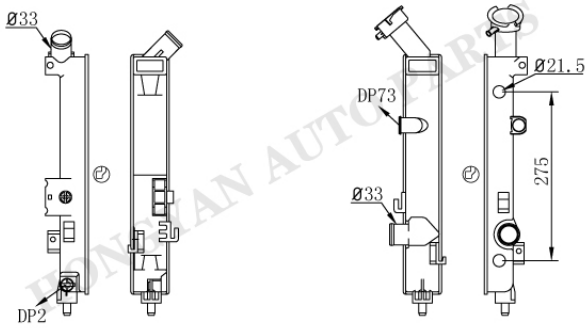

GM-0095-1AT

Tank size :(R4.5×5×5×62.5×390.5)
OEM :1031317/8
DPI :
NISSENS :
APPLICATION :
02-07 BUICK TERRAZA 3.5L
02-07 BUICK RENDEZVOUS 3.5L
02-07 CHEVROLET UPLANDER 3.5L
02-07 CHEVROLET VENTURE 3.5L

GM-0096AT/MT

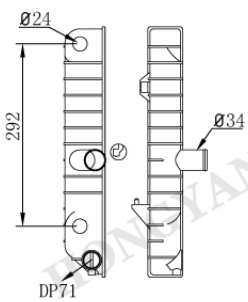

Tank size :(R5×6×5×58×417)
OEM :52466038
DPI :1515
NISSENS :
APPLICATION :
94-98 BUICK SKYLARK 2.4/3.1L
94-98 CHEVROLET BERETTA 2.4/3.1L
94-98 CHEVROLET CORSICA 2.4/3.1L

HONGYAN AUTO PARTS

CHEVROLET/BUICK/CADILLAC/SATURN/GMC

GM-0098AT/MT

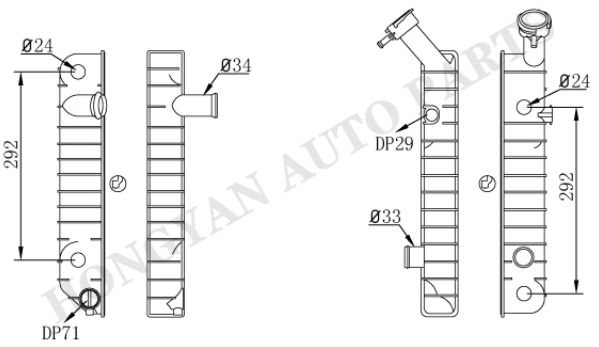

GM-0099AT/MT

Tank size :(R5×6×5×58×417)
OEM :3058895
DPI :1206 1216
NISSENS :
APPLICATION :
91-93 CHEVROLET LUMINA 3.1/3.4L

GM-0100

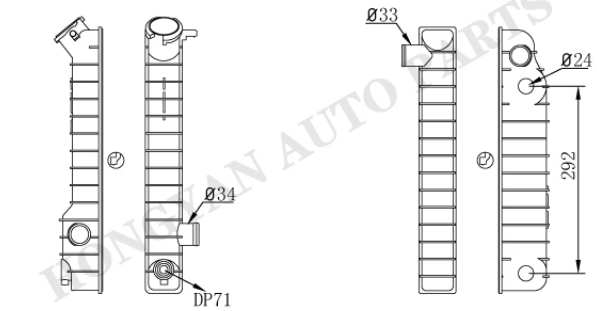

GM-0101AT/MT

Tank size :(R5×6×5×58×417)
OEM :3090605
DPI :741
NISSENS :
APPLICATION :
94-95 CHEVROLET LLV 2.2L
82-93 CHEVROLET S10 2.8L

GM-0102

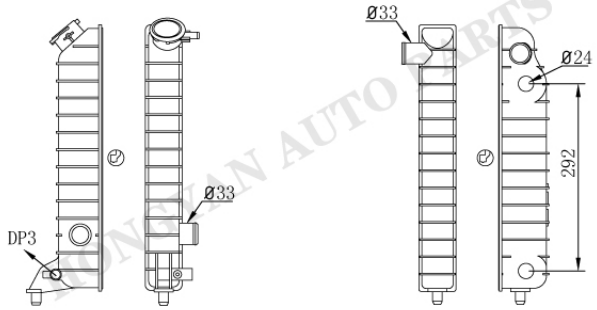

GM-0101-1AT/MT

Tank size :(R5×6×5×58×417)
OEM :3090605
DPI :1531
NISSENS :
APPLICATION :
97-05 CHEVROLET LUV 2.2/2.3L
94-03 CHEVROLET S10 2.2L
94-03 GMC SONOMA 2.2L
96-00 ISUZU HOMBRE 2.2L

GM-0103

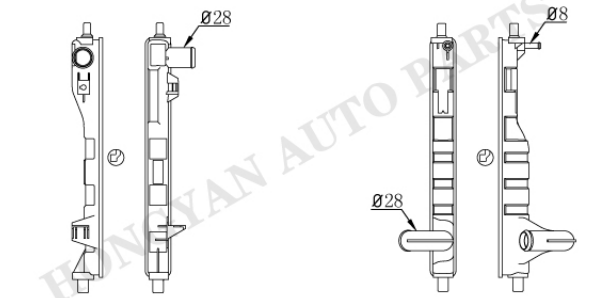

GM-0104

Tank size :(R10×4.5×5×36.5×340)
OEM :96591475 96477777
DPI :
NISSENS :61630
APPLICATION :
05- CHEVROLET MATIZ 0.8/1.0L
05- CHEVROLET SPARK 0.8/1.0L

HONGYAN AUTO PARTS

CHEVROLET/BUICK/CADILLAC/SATURN/GMC

GM-0105

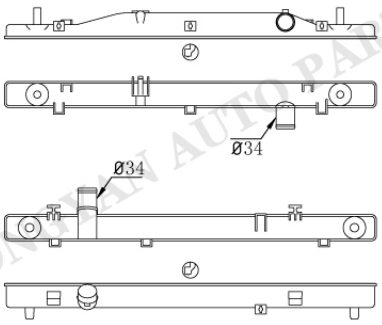

GM-0106

Tank size :(R9×4×5×47.7/54.5×679)
OEM :19129908 88987622 89022478
DPI :2731
NISSENS :
APPLICATION :
04-07 CADILLAC CTS 2.8/3.0/6.0L

GM-0107

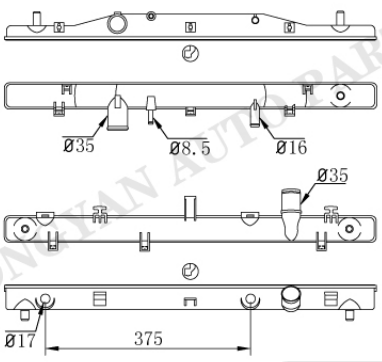

GM-0108AT/MT

Tank size :(R9×4×5×47.7×679)
OEM :25740114 25750930 52479614
DPI :2565
NISSENS :
APPLICATION :
03-04 CADILLAC CTS 3.2L

GM-0109

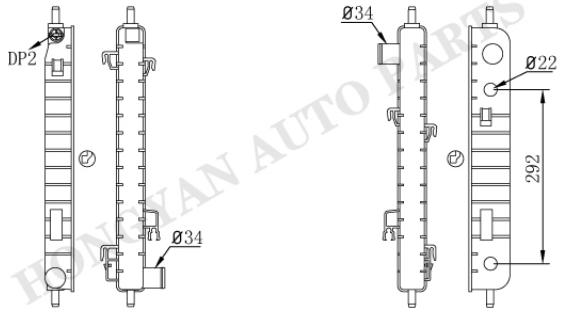

GM-0110AT/MT

Tank size :(R10×5×4.5×48×446)
OEM :22727322
DPI :2850
NISSENS :
APPLICATION :
06-11 CHEVROLET HHR 2.2/2.4L

GM-0111

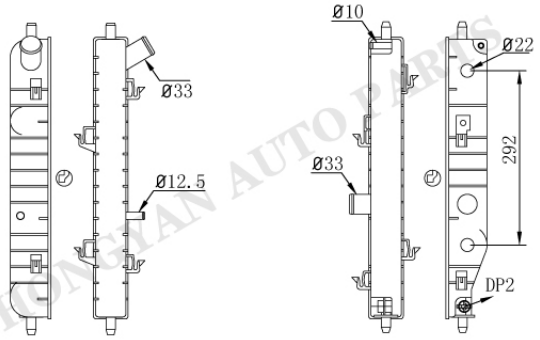

GM-0112AT/MT

Tank size : (R5×6×5×58×472)
OEM :10332373
DPI :2715
NISSENS :
APPLICATION :
04-09 CADILLAC XLR 1.4/4.6L

HONGYAN AUTO PARTS

CHEVROLET/BUICK/CADILLAC/SATURN/GMC

GM-0113

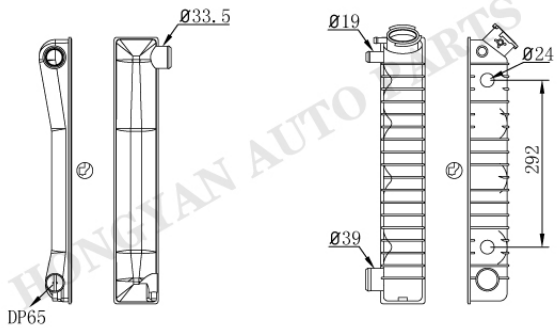

GM-0114AT/MT

Tank size :(R4.5×5.8×5×77×466)
OEM :
DPI :
NISSENS :
APPLICATION :

GM-0113

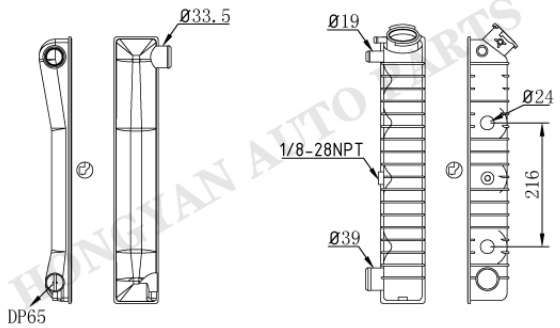

GM-0114-1AT/MT

Tank size :(R4.5×5.8×5×77×466)
OEM :
DPI :
NISSENS :
APPLICATION :

GM-0115AT/MT

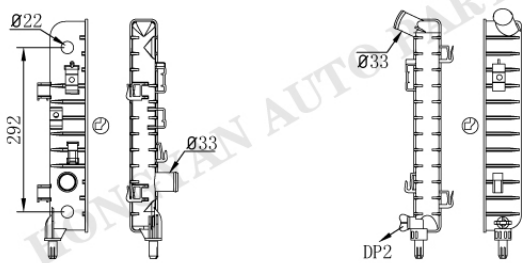

GM-0116

Tank size :(R10.5×5×4×48×379)
OEM :10344419
DPI :2827
NISSENS :
APPLICATION :
06-11 CHEVROLET IMPALA 3.5L
05-09 BUICK ALLURE 3.6/5.3L

GM-0117AT/MT

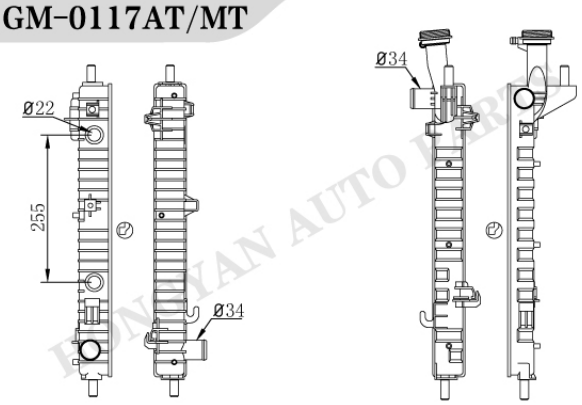

GM-0118

Tank size :(R5×4×5.5×55.5×507)
OEM :20772532 15226650/78
DPI :13007
NISSENS :
APPLICATION :
08-13 CHEVROLET ENCLAVA 3.6L
09-12 CHEVROLET TRAVERSE 3.6L
07-13 GMC ACADIA 3.6L
07-10 SATURN OUTLOOK 3.6L

HUNGYAN AUTO PARTS

GM-22

CHEVROLET/BUICK/CADILLAC/SATURN/GMC

GM-0119AT/MT

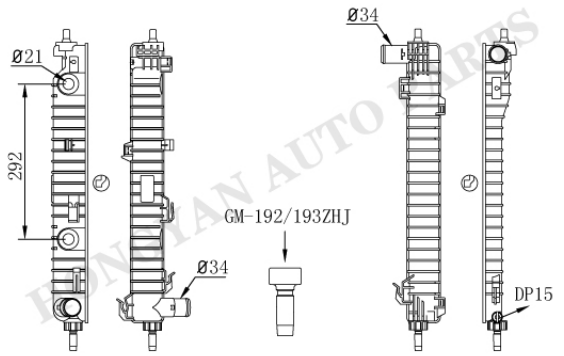

GM-0120

Tank size :(R10.5×4.5×5×63×526)
OEM :96800739
DPI :13057
NISSENS :
APPLICATION :
08-10 SATURN VUE 2.4/3.6L
10-15 SHEVROLET CAPTIVA SPORT 2.4/3.0L

GM-0119-1AT/MT

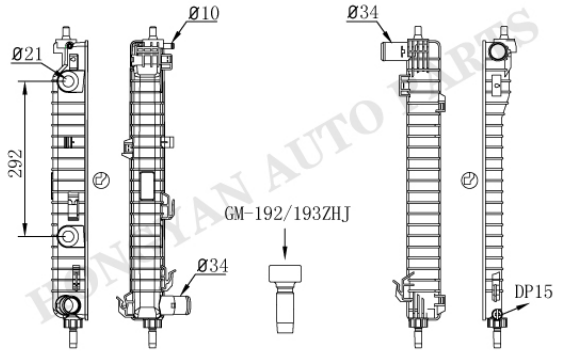

GM-0120

Tank size :(R10.5×4.5×5×63×526)
OEM :
DPI :
NISSENS :616905
APPLICATION :
08-10 SATURN VUE 2.4/3.6L
10-15 SHEVROLET CAPTIVA SPORT 2.4/3.0L

GM-0121

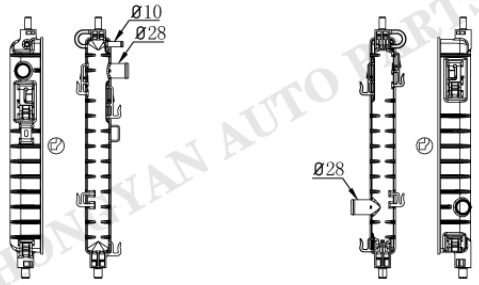

GM-0122

Tank size :(R10.5×5×4×48×407.5)
OEM :
DPI :
NISSENS :
APPLICATION :
11- CHEVROLET SALL 1.4L

GM-0123



GM-0124

Tank size :(R10.5×5×4×48×407.5)
OEM :
DPI :
NISSENS :
APPLICATION :
11- CHEVROLET SALL 1.2L

HONGYAN AUTO PARTS

CHEVROLET/BUICK/CADILLAC/SATURN/GMC

GM-0125

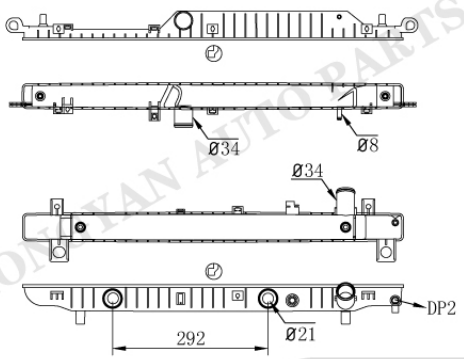

GM-0126AT/MT

Tank size :(R9×4.5×5×46/51×717)
OEM :
DPI :
NISSENS :
APPLICATION :

GM-0127

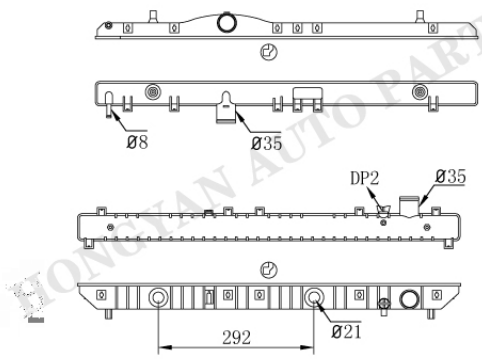

GM-0128AT/MT

Tank size :(R8×4.8×5×46/51×718)
OEM :
DPI :
NISSENS :
APPLICATION :

GM-0129AT/MT

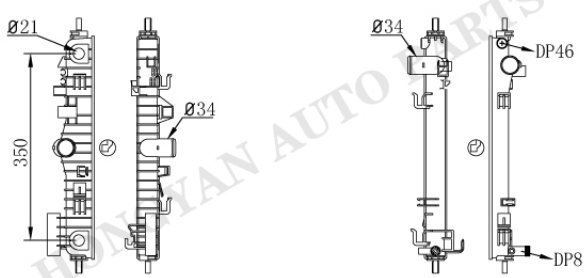

GM-0130

Tank size :(R5×4×5×42×418.5)
OEM :13241729
DPI :13217 13417
NISSENS :
APPLICATION :
11-13 BUICK REGAL 2.0L

GM-0131

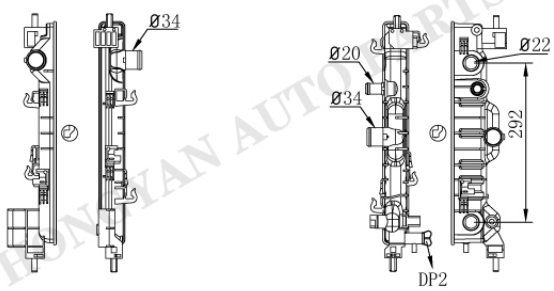

GM-0132AT/MT

Tank size :(R10×5×4.8×48×410)
OEM :95460093
DPI :
NISSENS :
APPLICATION :
CHEVROLET AVEO

GM-24

CHEVROLET/BUICK/CADILLAC/SATURN/GMC

GM-0133AT/MT

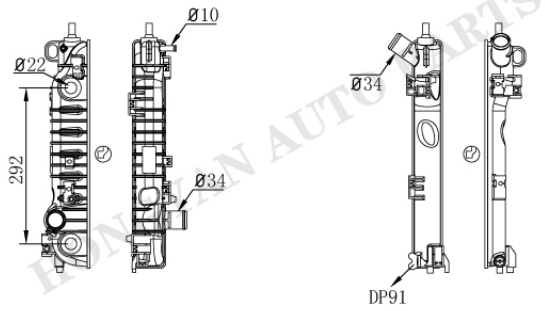

GM-0134

Tank size :(R10.5×4.3×4.8×62.5/56×428)
OEM :
DPI :
NISSENS :
APPLICATION :
CHEVROLET EPICA TAXI

GM-0135AT/MT

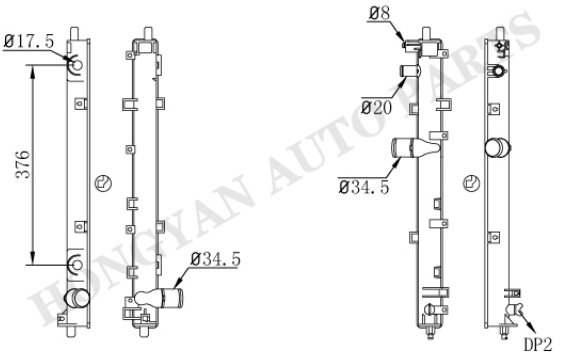

GM-0136

Tank size :(R9×4×5×48×544)
OEM :15932855 25957496
DPI :13108
NISSENS :
APPLICATION :

GM-0135AT/MT

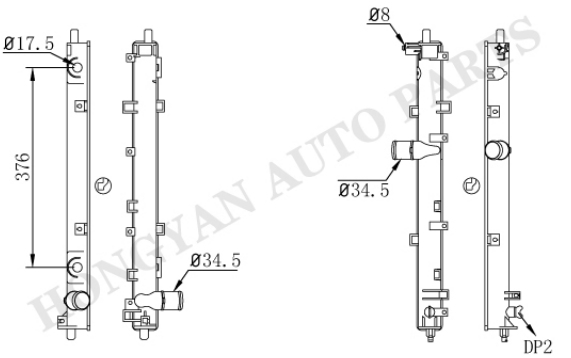

GM-0136-1

Tank size :(R9×4×5×48×544)
OEM :
DPI :
NISSENS :
APPLICATION :

GM-0137

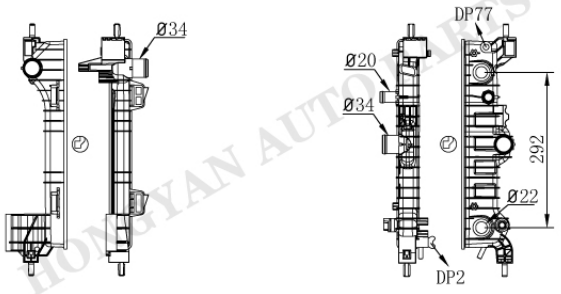

GM-0138AT/MT

Tank size :(R9.5×4×5×42×395)
OEM :95022259
DPI :13247
NISSENS :
APPLICATION :
12-14 CHEVROLET SONIC 1.6/1.8L

CHEVROLET/BUICK/CADILLAC/SATURN/GMC

GM-0139AT/MT

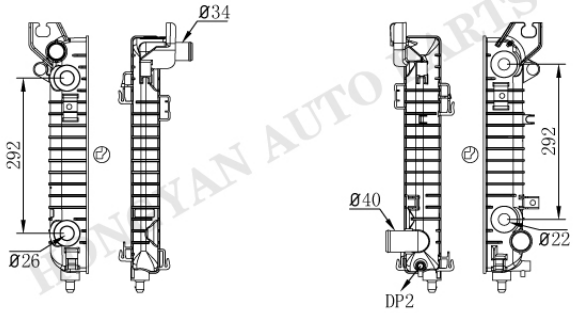

GM-0140AT/MT

Tank size :(R10.5×5×4.3×54.5/69×447)
OEM :
DPI :13397 13398
NISSENS :
APPLICATION :
14-15 CHEVROLET SILVERADO 1500

GM-0141AT/MT

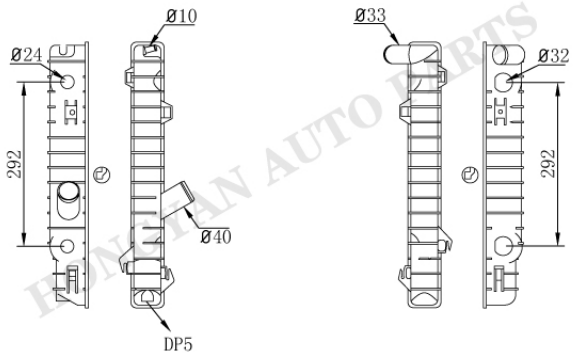

GM-0142AT/MT

Tank size :(R5×6×5×58×472)
OEM :
DPI :1700
NISSENS :
APPLICATION :
95-96 OLDSMOBILE AURORA 4.0L

GM-0141-1AT/MT

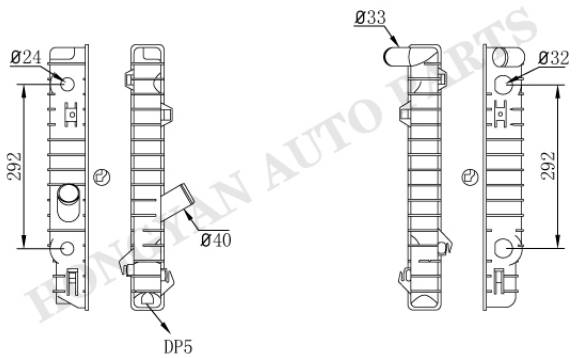

GM-0142AT/MT

Tank size :(R5×6×5×58×472)
OEM :
DPI :
NISSENS :
APPLICATION :
95-96 OLDSMOBILE AURORA 4.0L

GM-0143

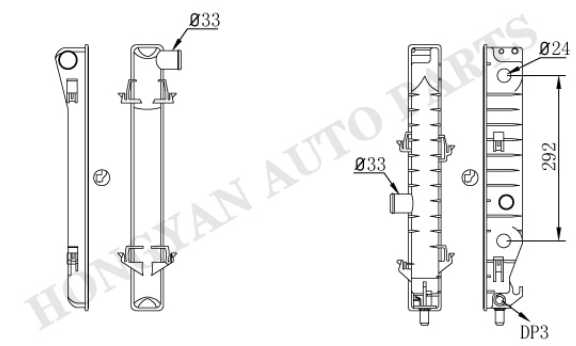

GM-0144AT/MT

Tank size :(R5×6×5×58×472)
OEM :
DPI :1885
NISSENS :
APPLICATION :
97-04 CHEVROLET CORVETTE 5.7L

CHEVROLET/BUICK/CADILLAC/SATURN/GMC

GM-0029

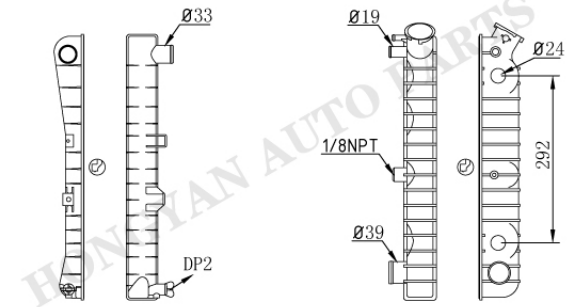

GM-0145AT/MT

Tank size :(R5×6×5×58×472)
OEM :
DPI :1210
NISSENS :
APPLICATION :
91-93 BUICK ROADMASTER 5.0/5.7L
91-93 BUICK COMMERCIAL 5.0/5.7L
91-93 CHEVROLET CAPRICE 5.0/5.7L

GM-0037AT/MT

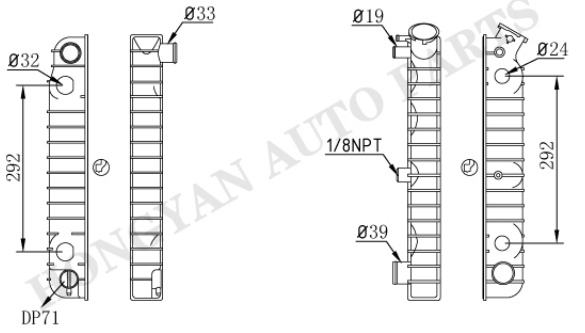

GM-0145AT/MT

Tank size :(R5×6×5×58×472)
OEM :
DPI :1212
NISSENS :
APPLICATION :
91-93 BUICK ROADMASTER 5.7L
91-93 BUICK COMMERCIAL 5.7L
91-93 CHEVROLET CAPRICE 4.3/5.0/5.7L

GM-0059

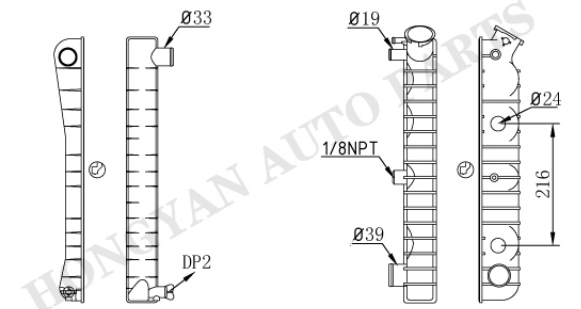

GM-0145-1AT

Tank size :(R5×6×5×58×472)
OEM :
DPI :161 162
NISSENS :
APPLICATION :
71-73 BUICK CENTURION 5.7/7.5L
73-90 BUICK CENTURY 3.8/5.0/5.7/7.5L

GM-0146

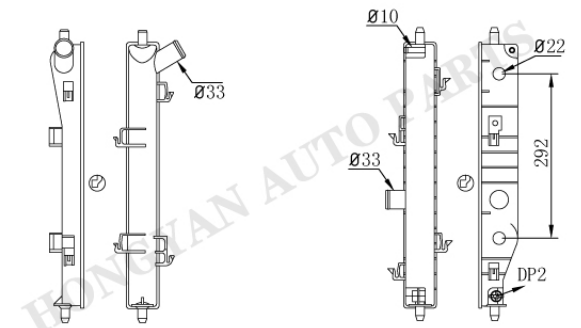

GM-0112AT/MT

Tank size :(R5×6×5×58×472)
OEM :
DPI :2714
NISSENS :
APPLICATION :
09-13 CHEVROLET CORVETTE 6.2L
03-06 CHEVROLET SSR 5.3/6.0L
08-09 SAAB 9-7X 6.0L

HONGYAN AUTO PARTS

CHEVROLET/BUICK/CADILLAC/SATURN/GMC

GM-0037AT/MT

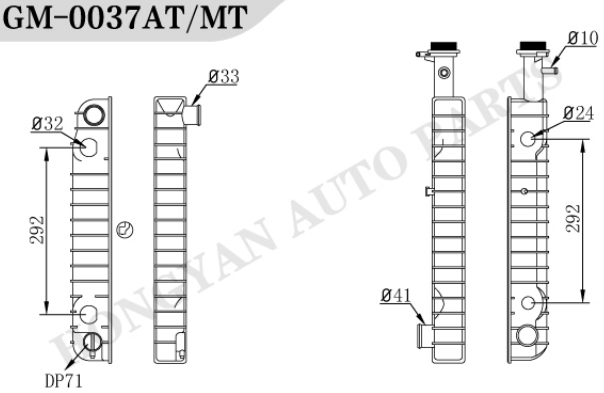

GM-0147AT/MT

Tank size :(R5×6×5×58×472)
OEM :
DPI :
NISSENS :
APPLICATION :

GM-0037AT/MT

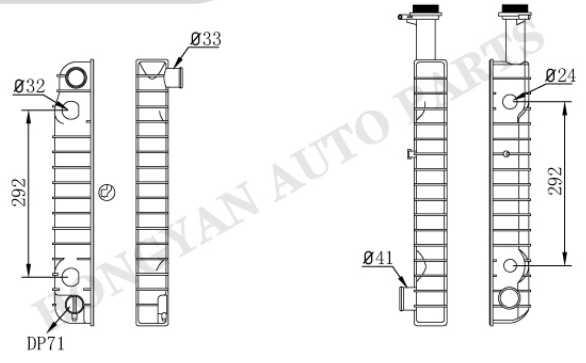

GM-0147-1AT/MT

Tank size :(R5×6×5×58×472)
OEM :
DPI :2712
NISSENS :
APPLICATION :
03-05 CHEVROLET EXPRESS 5.3L
03-05 GMC SAVANA 5.3L

GM-0037AT/MT

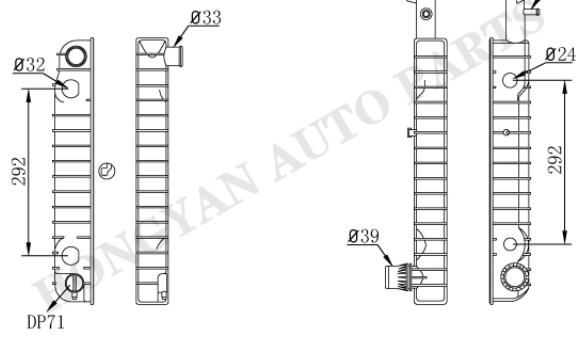

GM-0148AT/MT

Tank size :(R5×6×5×58×472)
OEM :
DPI :2792
NISSENS :
APPLICATION :
06-14 CHEVROLET EXPRESS 5.3L
06-14 GMC SAVANA 5.3L

GM-0037AT/MT

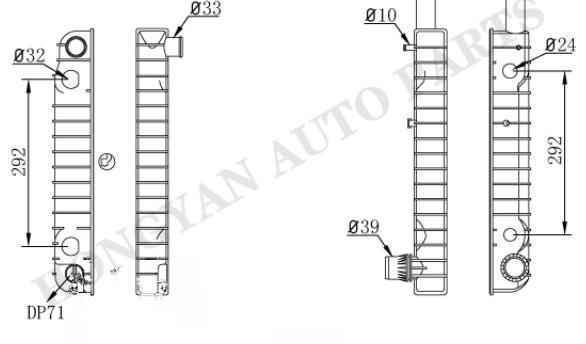

GM-0148-1AT/MT

Tank size :(R5×6×5×58×472)
OEM :
DPI :
NISSENS :
APPLICATION :
06-14 CHEVROLET EXPRESS 5.3L
06-14 GMC SAVANA 5.3L

HUNGYAN AUTO PARTS

CHEVROLET/BUICK/CADILLAC/SATURN/GMC

GM-0037AT/MT

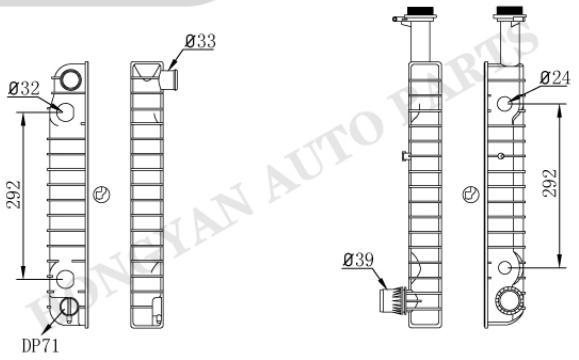

GM-0148-2AT/MT

Tank size :(R5×6×5×58×472)
OEM :
DPI :
NISSENS :
APPLICATION :
06-14 CHEVROLET EXPRESS 5.3L
06-14 GMC SAVANA 5.3L

GM-0149

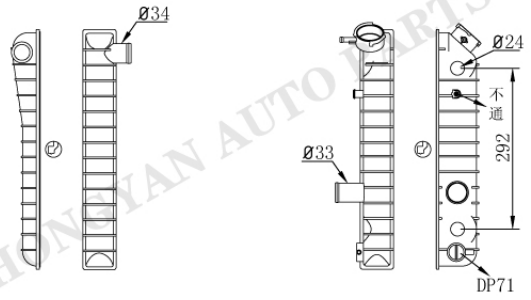

GM-0036-1AT/MT

Tank size :(R5×6×5×58×417)
OEM :
DPI :829
NISSENS :
APPLICATION :
84-90 CHEVROLET CORVETTE 5.7L

GM-0150AT/MT

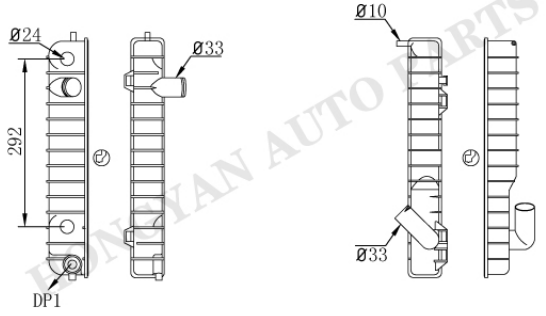

GM-0151

Tank size :(R5×6×5×58×417)
OEM :
DPI :229
NISSENS :
APPLICATION :
87-88 CHEVROLET BERETTA 2.8L
87-88 CHEVROLET CORSICA 2.8L

GM-0150AT/MT

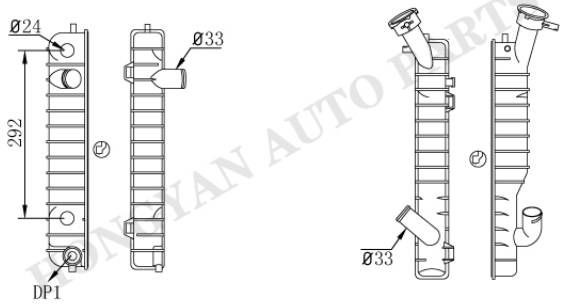

GM-0152

Tank size :(R5×6×5×58×417)
OEM :
DPI :1074
NISSENS :
APPLICATION :
90-91 CHEVROLET BERETTA 2.2/3.1L
90-91 CHEVROLET CORSICA 2.2/3.1L

HONGYAN AUTO PARTS

CHEVROLET/BUICK/CADILLAC/SATURN/GMC

GM-0150AT/MT

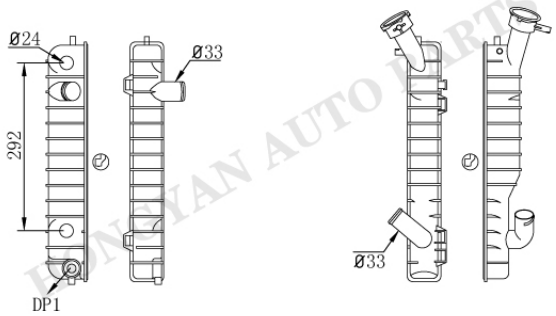

GM-0152-1

Tank size :(R5×6×5×58×417)
OEM :
DPI :
NISSENS :
APPLICATION :

GM-0153AT/MT

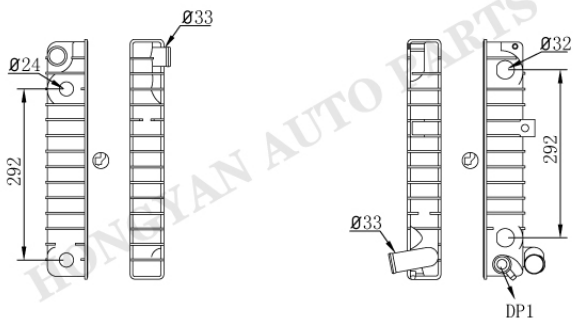

GM-0154AT/MT

Tank size :(R5×6×5×58×417)
OEM :
DPI :1049
NISSENS :
APPLICATION :
89-91 BUICK SKYLARK 2.3L
89-91 OLDSMOBILE CUTLASS CALAIS 2.3L
89-91 PONTIAC GRAND AM 2.3L

GM-0153AT/MT

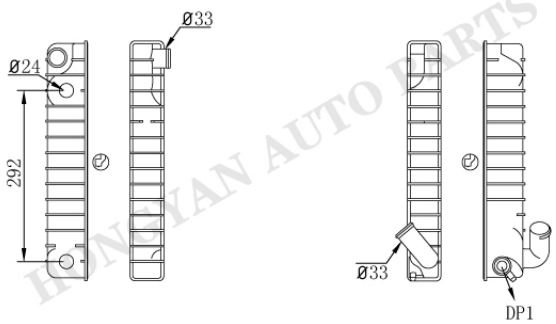

GM-0154-1

Tank size :(R5×6×5×58×417)
OEM :
DPI :749 1043
NISSENS :
APPLICATION :
89-91 BUICK SKYLARK 2.5/3.3L
89-91 OLDSMOBILE CUTLASS CALAIS 2.5/3.3L
89-91 PONTIAC GRAND AM 2.5/3.3L

GM-0155AT/MT

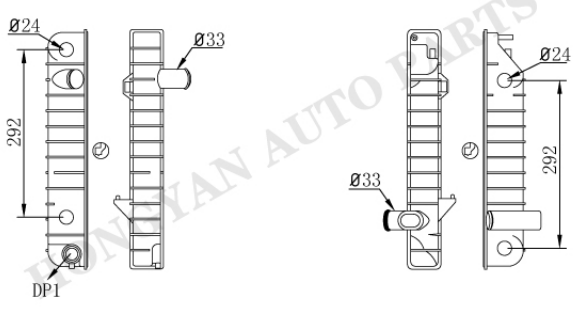

GM-0156AT/MT

Tank size :(R5×6×5×58×417)
OEM :
DPI :1341 1344 1610
NISSENS :
APPLICATION :
92-95 CHEVROLET BERETTA 2.2/3.1L
92-95 CHEVROLET CORSICA 2.2/3.1L

GM-30

HUNGYAN AUTO PARTS

CHEVROLET/BUICK/CADILLAC/SATURN/GMC

GM-0157AT/MT

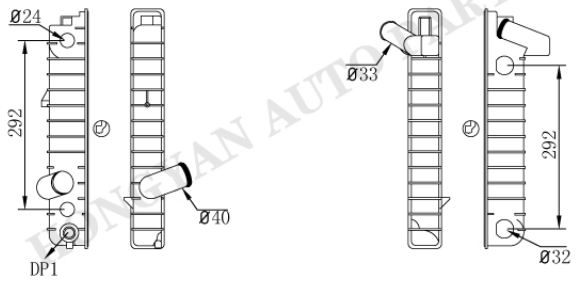

GM-0158AT/MT

Tank size :(R5×6×5×58×417)
OEM :52470913 52489132
DPI :1842
NISSENS :
APPLICATION :
95-02 CADILLAC ELDORADO 4.6L
96-99 CADILLAC DEVILLE 4.6L
93-97 CADILLAC SEVILLE 4.6L

GM-0159AT/MT

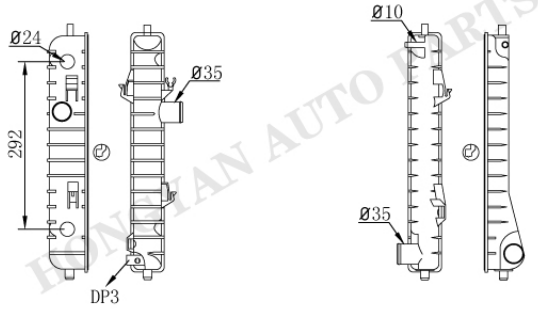

GM-0160

Tank size :(R5×6×5×58×417)
OEM :
DPI :1687
NISSENS :
APPLICATION :
95-02 CHEVROLET CAVALIER 2.2/2.4L
95-02 PONTIAC SUNFIRE 2.2/2.4L

GM-0159AT/MT

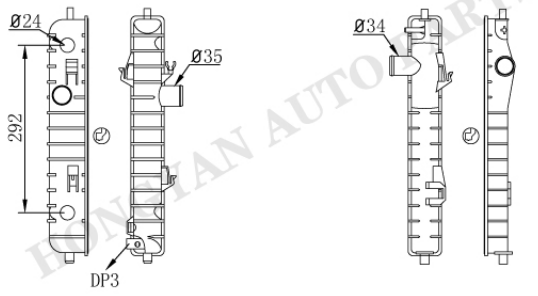

GM-0161

Tank size :(R5×6×5×58×417)
OEM :
DPI :2518
NISSENS :
APPLICATION :
02-05 CHEVROLET CAVALIER 2.2L
02-05 PONTIAC SUNFIRE 2.2L

GM-0098AT/MT

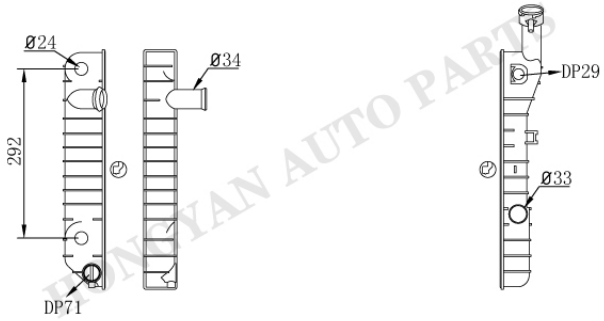

GM-0162

Tank size :(R5×6×5×58×417)
OEM :
DPI :658
NISSENS :
APPLICATION :
88-90 BUICK REGAL 2.8/3.1L
90-93 CHEVROLET LUMINA 2.2/2.5/3.1L
88-91 OLDSMOBILE CUTLASS 2.3/2.8/3.1L

HONGYAN AUTO PARTS

CHEVROLET/BUICK/CADILLAC/SATURN/GMC

GM-0098AT/MT

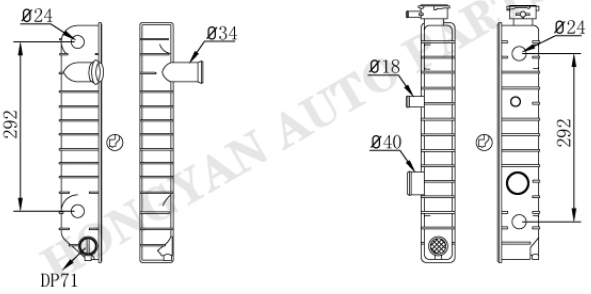

GM-0163AT/MT

Tank size :(R5×6×5×58×417)
OEM :
DPI :705
NISSENS :
APPLICATION :
88-94 CHEVROLET S10 4.3L
92-94 GMC JIMMY 4.3L
91-93 GMC SONOMA 4.3L
92-93 GMC TYPHOON 4.3L

GM-0164

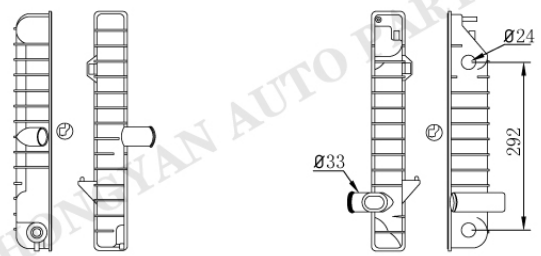

GM-0156AT/MT

Tank size :(R5×6×5×58×417)
OEM :52466966
DPI :1515
NISSENS :
APPLICATION :
94-98 BUICK SKYLARK 2.3/2.4/3.1L
94-96 CHEVROLET 2.2/3.1L
94-98 OLDSMOBILE ACHIEVA 2.3/2.4/3.1L

GM-0007

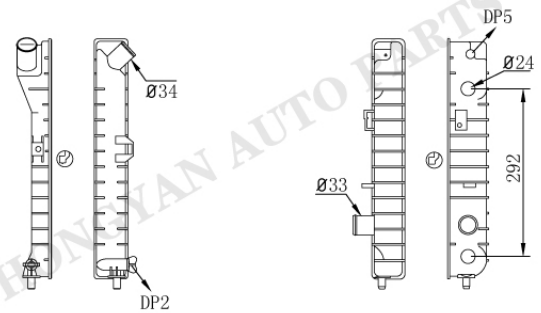

GM-0165AT/MT

Tank size :(R5×6×5×58×417)
OEM :
DPI :2421
NISSENS :
APPLICATION :
99-02 OLDSMOBILE INTRIGUE 3.5L

GM-0166AT/MT

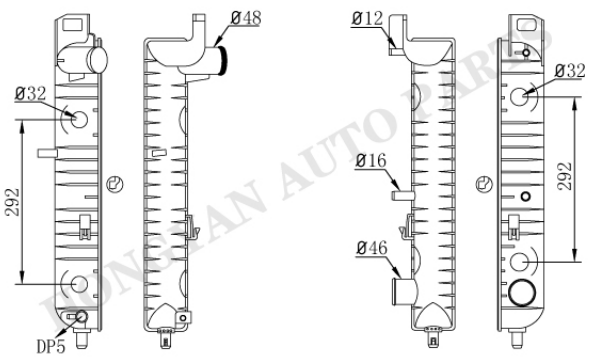

GM-0167AT/MT

Tank size :(R5×6×5×77×521)
OEM :
DPI :2538
NISSENS :
APPLICATION :
01-02 CHEVROLET SILVERADO 2500/3500 8.1L
01-02 CHEVROLET SUBURBAN 2500 8.1L
01-02 GMC SIERRA 2500/3500 8.1L

HONGYAN AUTO PARTS

GM-32

CHEVROLET/BUICK/CADILLAC/SATURN/GMC

GM-0166-1AT/MT

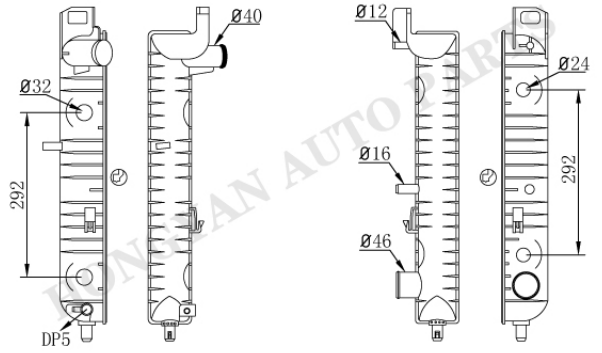

GM-0167-1AT/MT

Tank size :(R5×6×5×77×521)
OEM :
DPI :
NISSENS :
APPLICATION :
01-02 CHEVROLET SILVERADO 2500/3500 8.1L
01-02 CHEVROLET SUBURBAN 2500 8.1L
01-02 GMC SIERRA 2500/3500 8.1L

GM-0168

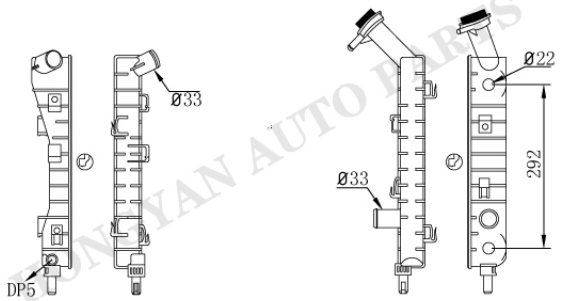

GM-0169AT/MT

Tank size :(R10×5×4.5×48×380)
OEM :
DPI :2710
NISSENS :
APPLICATION :
05-09 BUICK ALLURE 3.8L
05-09 BUICK LACROSSE 3.8L
04-05 CHEVROLET IMPALA 3.8L

GM-0170

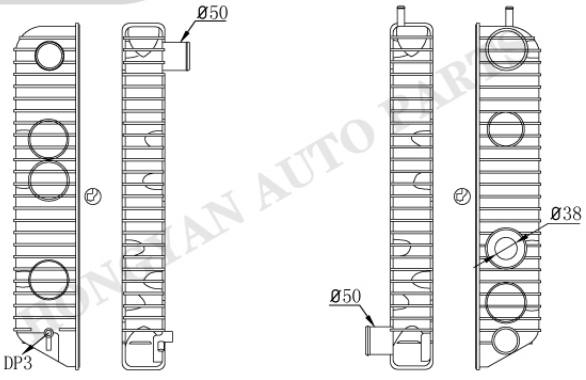

GM-0171

Tank size :(R8.5×6×5×77×625)
OEM :
DPI :2110 2460
NISSENS :
APPLICATION :
97-02 CHEVROLET C7500 6.0/7.2/8.1L
97-00 CHEVROLET B7T042 6.6/7.2L

GM-0172AT/MT

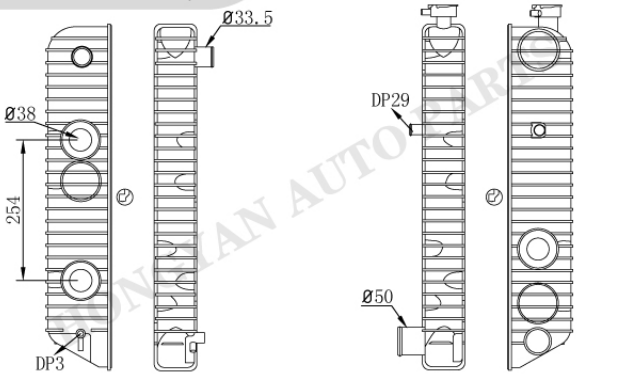

GM-0173

Tank size :(R8.5×6×5×77×625)
OEM :
DPI :
NISSENS :
APPLICATION :

CHEVROLET/BUICK/CADILLAC/SATURN/GMC

GM-0172AT/MT

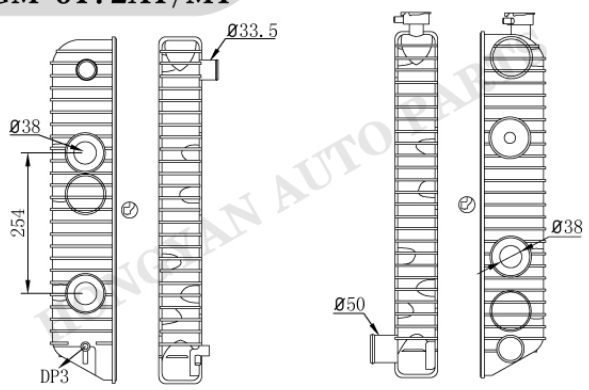

GM-0174

Tank size :(R8.5×6×5×77×625)
OEM :
DPI :
NISSENS :
APPLICATION :

GM-0175AT/MT

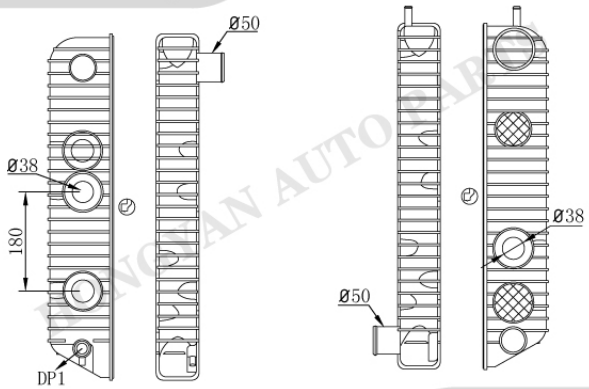

GM-0176

Tank size :(R8.5×6×5×77×628)
OEM :
DPI :
NISSENS :
APPLICATION :

GM-0177AT/MT

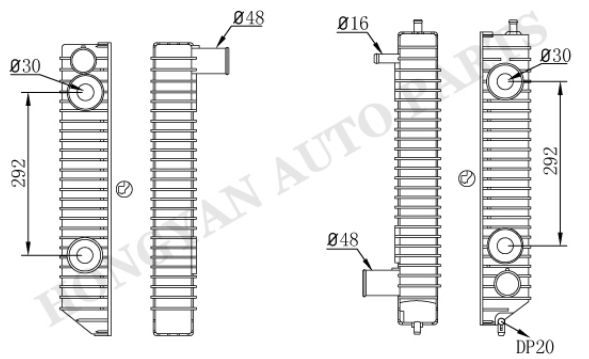

GM-0178AT/MT

Tank size :(R5×5.5×5×71×527.5)
OEM :
DPI :
NISSENS :
APPLICATION :

GM-0179AT/MT

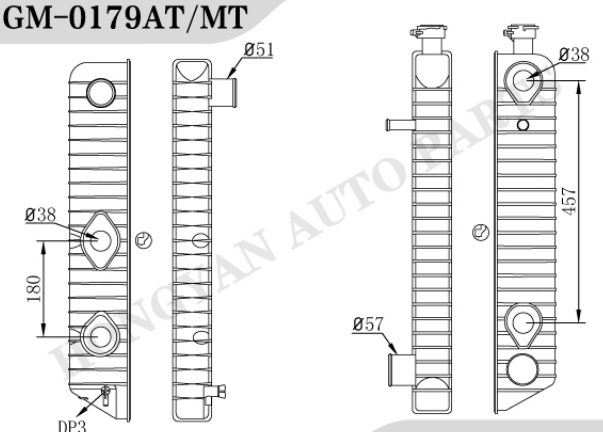

GM-0180AT/MT

Tank size :(R4×6×4.5×77×681)
OEM :
DPI :
NISSENS :
APPLICATION :

GM-34

CHEVROLET/BUICK/CADILLAC/SATURN/GMC

GM-0181

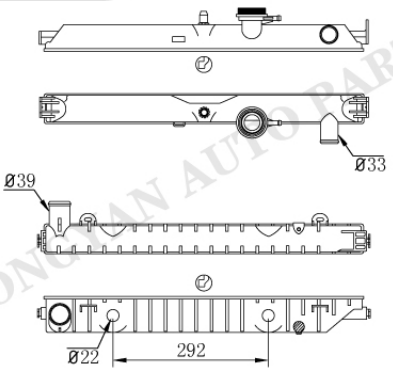

GM-0182AT/MT

Tank size :(R9.5×5×4.5×56×599)
OEM :
DPI :2707
NISSENS :
APPLICATION :
06-12 CHEVROLET COLORADO 2.9/3.7L
04-12 GMC CANYON 2.9/3.7L

GM-0183

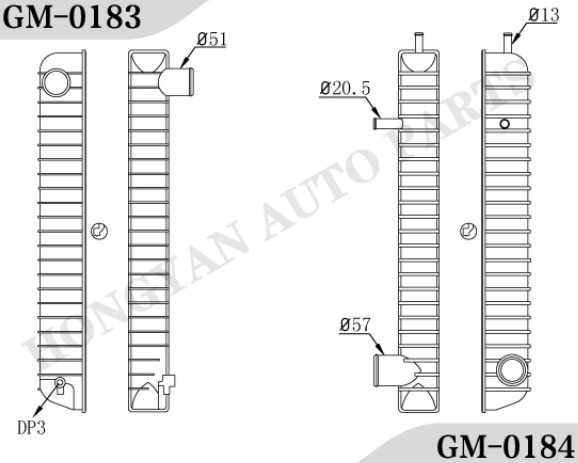

GM-0184

Tank size :(R5×5×5×76×680)
OEM :
DPI :
NISSENS :
APPLICATION :

GM-0033AT/MT

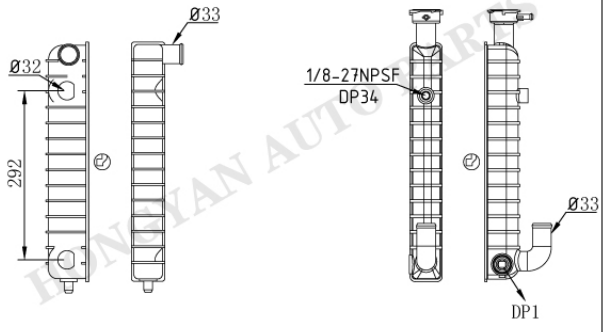

GM-0185

Tank size :(R5×6×5×58×417)
OEM :
DPI :977
NISSENS :
APPLICATION :
82-89 BUICK SKYHAWK 2.0L
84-86 CADILLAC CIMARRON 2.0L
88-94 CHEVROLET CAVALIER 2.2L

GM-0186

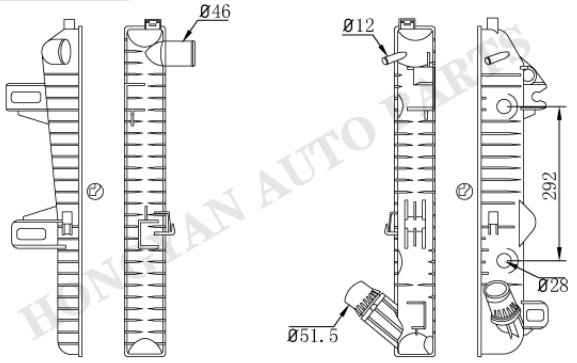

GM-0187AT/MT

Tank size :(R5×6×6×77×621)
OEM :
DPI :2857 2948
NISSENS :
APPLICATION :
06-10 CHEVROLET SILVERADO 6.6L
06-10 GMC SIERRA 6.6L

HONGYAN AUTO PARTS

CHEVROLET/BUICK/CADILLAC/SATURN/GMC

GM-0037-1AT/MT

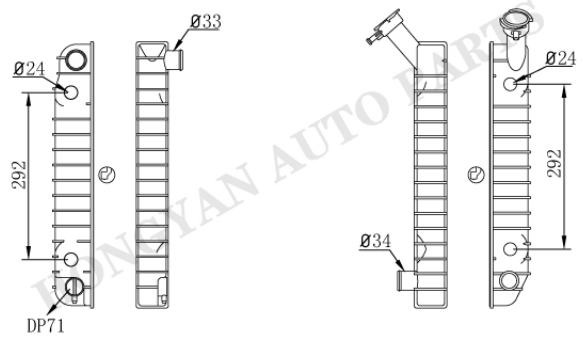

GM-0188AT/MT

Tank size :(R5×6×5×58×472)
OEM :
DPI :1342
NISSENS :
APPLICATION :
92-96 BUICK CENTURY 2.2/3.3L
92-96 OLDSMOBILE CUTLASS 3.1/3.3L

GM-0059

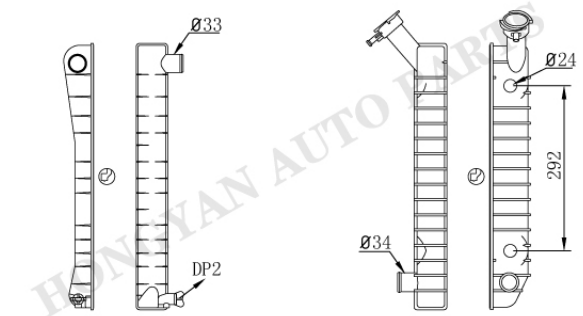

GM-0188AT/MT

Tank size :(R5×6×5×58×472)
OEM :
DPI :1340
NISSENS :
APPLICATION :
92-96 BUICK CENTURY 3.1/3.3L
92-96 OLDSMOBILE CUTLASS 3.1/3.3L

GM-0189

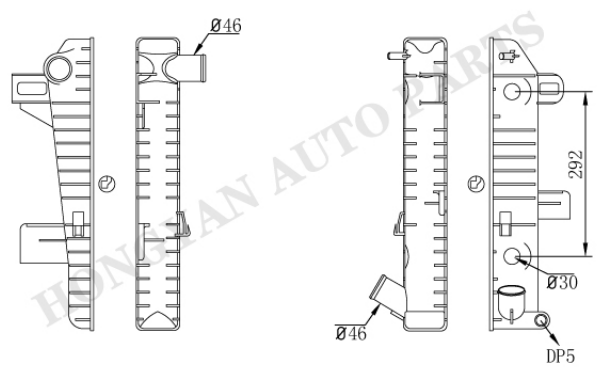

GM-0190AT/MT

Tank size :(R5×6×4.5×77×521)
OEM :
DPI :2510 2757
NISSENS :
APPLICATION :
01-05 CHEVROLET SILVERADO 6.6L
01-05 GMC SIERRA 6.6L

GM-0191

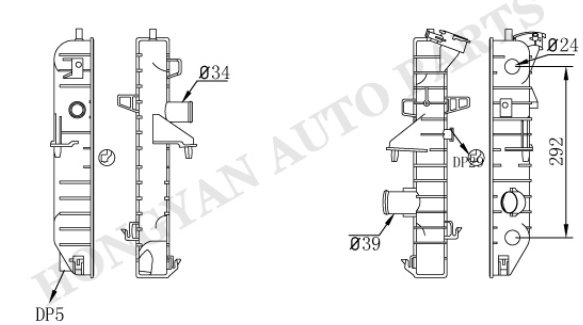

GM-0192AT/MT

Tank size :(R5×6×5×58×417)
OEM :
DPI :
NISSENS :
APPLICATION :

HUNTYAN AUTO PARTS

CHEVROLET/BUICK/CADILLAC/SATURN/GMC

GM-0193AT/MT

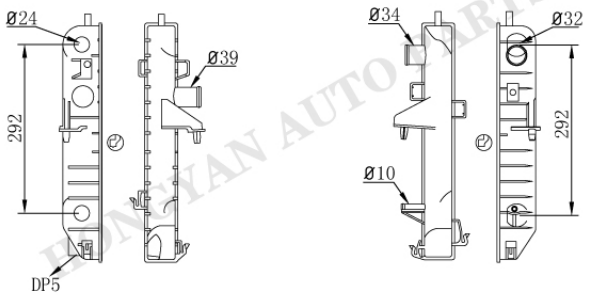

GM-0194AT/MT

Tank size :(R5×6×5×58×417)
OEM :
DPI :2279 2474
NISSENS :
APPLICATION :
98-00 CADILLAC SEVILLE 4.6L

GM-0193-1

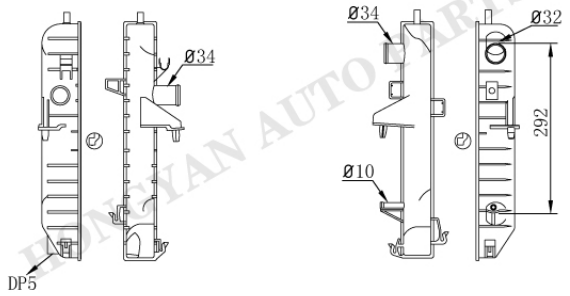

GM-0194AT/MT

Tank size :(R5×6×5×58×417)
OEM :
DPI :
NISSENS :
APPLICATION :

GM-0195AT/MT

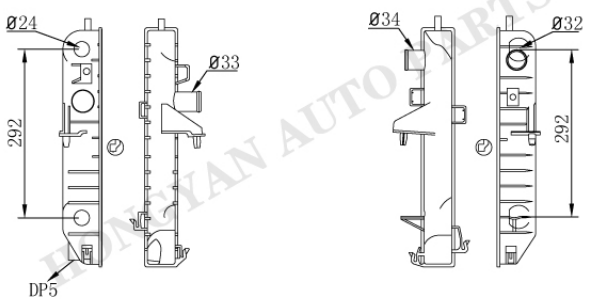

GM-0194-1AT/MT

Tank size :(R5×6×5×58×417)
OEM :
DPI :2513 2514
NISSENS :
APPLICATION :
01-04 CADILLAC SEVILLE 4.6L

GM-0193AT/MT

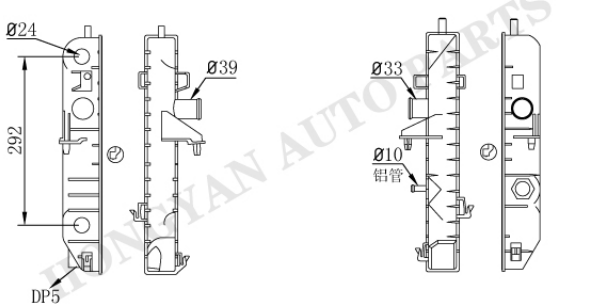

GM-0196

Tank size :(R5×6×5×58×417)
OEM :
DPI :2369
NISSENS :
APPLICATION :
00- CADILLAC DEVILLE 4.6L

HONGYAN AUTO PARTS

CHEVROLET/BUICK/CADILLAC/SATURN/GMC

GM-0012AT/MT

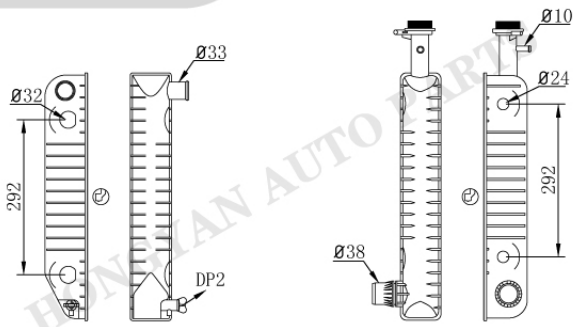

GM-0197AT/MT

Tank size :(R5×6×5×77×465)
OEM :
DPI :2713
NISSENS :
APPLICATION :
03-04 CHEVROLET EXPRESS 4.8/6.0L
03-04 GMC SAVANA 4.8/6.0L

GM-0012AT/MT

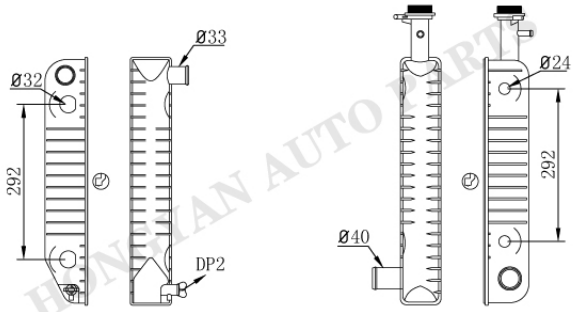

GM-0198AT/MT

Tank size :(R5×6×5×77×465)
OEM :
DPI :
NISSENS :
APPLICATION :

GM-0199

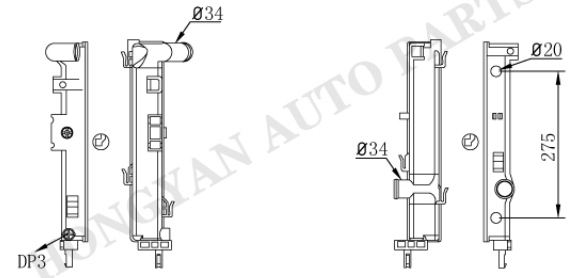

GM-0200AT/MT

Tank size :(R9×4.5×4.5×62×373)
OEM :
DPI :2881
NISSENS :
APPLICATION :
06-07 BUICK TERRAZA 3.9L
06-07 CHEVROLET UPLANDER 3.9L
06-09 PONTIAC MONTANA 3.9L
07- SATURN RELAY 3.9L

GM-0201AT/MT

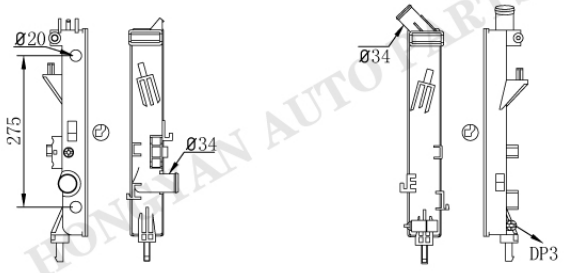

GM-0202

Tank size :(R8.5×4.5×4.5×62×390)
OEM :
DPI :2969
NISSENS :
APPLICATION :
06-09 PONTIAC SOLSTICE 2.4L
07-10 SATURN SKY 2.4L

HONGYAN AUTO PARTS

CHEVROLET/BUICK/CADILLAC/SATURN/GMC

GM-0203

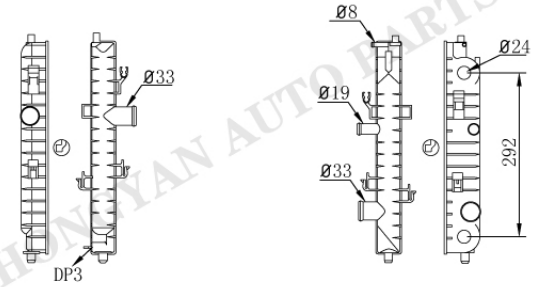

GM-0204AT/MT

Tank size :(R10×4.8×4.4×48×390)
OEM :
DPI :2264 2550
NISSENS :
APPLICATION :
97-03 CHEVROLET MALIBU 2.4/3.1L
99-04 OLDSMOBILE ALERO 2.4/3.4L

GM-0203

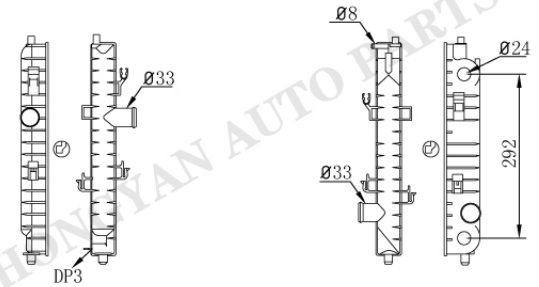

GM-0205AT/MT

Tank size :(R10×4.8×4.4×48×390)
OEM :
DPI :2039
NISSENS :
APPLICATION :

GM-0203

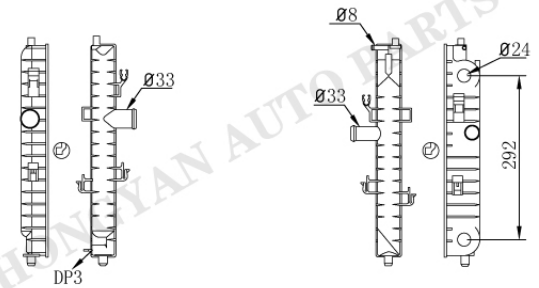

GM-0206AT/MT

Tank size :(R10×4.8×4.4×48×390)
OEM :
DPI :2520
NISSENS :
APPLICATION :
04-05 CHEVROLET MALIBU 2.2L
02-04 OLDSMOBILE ALERO 2.2L

GM-0207AT/MT

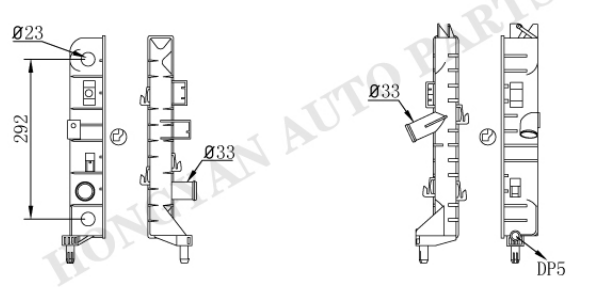

GM-0208

Tank size :(R10×5×4.5×47.8×378.3)
OEM :
DPI :2837
NISSENS :
APPLICATION :
06-11 CHEVROLET IMPALA 3.5/3.9L
06-07 CHEVROLET MONTE 5.3L
05-08 PONTIAC GRAND PRIX 5.3L

HONGYAN AUTO PARTS

CHEVROLET/BUICK/CADILLAC/SATURN/GMC

GM-0209

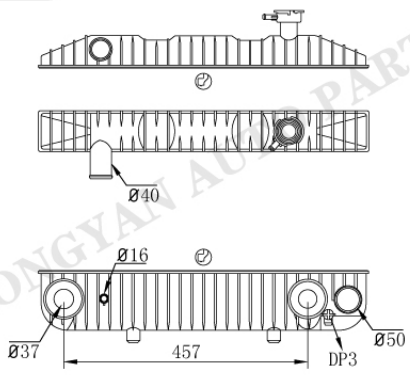

GM-0210AT/MT

Tank size :(R5×6×5×77×620)
OEM :
DPI :
NISSENS :
APPLICATION :

GM-0209-1

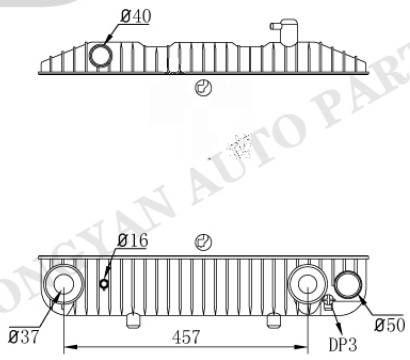

GM-0210AT/MT

Tank size :(R5×6×5×77×620)
OEM :
DPI :
NISSENS :
APPLICATION :

GM-0211

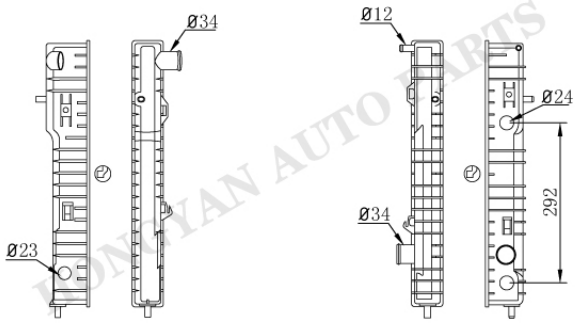

GM-0212AT/MT

Tank size :(R5×6×5×57.5×493)
OEM :
DPI :
NISSENS :
APPLICATION :

GM-0213AT/MT

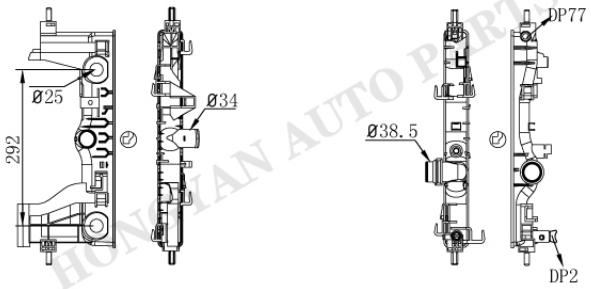

GM-0214

Tank size :(R10×5×4.5×48×408)
OEM :
DPI :13197
NISSENS :
APPLICATION :
10-14 CHEVROLET CRUZE 1.4/1.8L

HONGYAN AUTO PARTS

CHEVROLET/BUICK/CADILLAC/SATURN/GMC

GM-0215AT/MT



GM-0216

Tank size : (R5.5×5×5×55×395)
OEM :
DPI :2607
NISSENS :
APPLICATION :
01-03 SATURN L300 3.0L
01-03 SATURN LW300 3.0L

GM-0215-1AT/MT



GM-0216

Tank size : (R5.5×5×5×55×395)
OEM :
DPI :
NISSENS :
APPLICATION :

GM-0215AT/MT



GM-0216-1

Tank size : (R5.5×5×5×55×395)
OEM :
DPI :2606
NISSENS :
APPLICATION :
01-03 SATURN LW200 2.2L
01-03 SATURN L200 2.2L

GM-0217



GM-0218

Tank size : (R10×5×5×49×407)
OEM :
DPI :
NISSENS :
APPLICATION :

HONGYAN AUTO PARTS

CHEVROLET/BUICK/CADILLAC/SATURN/GMC

GM-0217-1



GM-0218-1

Tank size :(R10×5×5×49×407)
OEM :
DPI :
NISSENS :
APPLICATION :

GM-0219

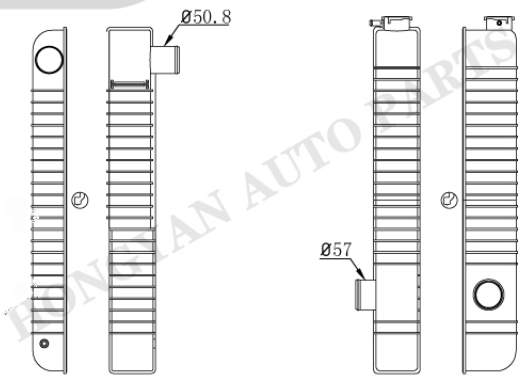

GM-0220

Tank size :(R8×6×4×88.5×659.5)
OEM :
DPI :459 504 548 549
NISSENS :
APPLICATION :
81-85 GMC C70000 7.0L

GM-0221

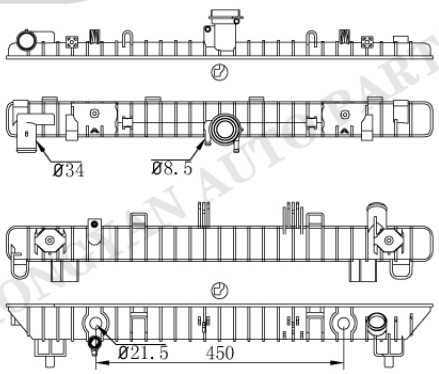

GM-0222AT/MT

Tank size :(R14×6.5×5.2×63×776.5)
OEM :
DPI :13142
NISSENS :
APPLICATION :
10-11 CHEVROLET CAMARO 6.2L

GM-0221-1

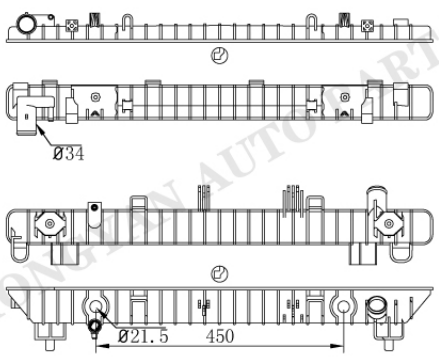

GM-0222AT/MT

Tank size :(R14×6.5×5.2×63×776.5)
OEM :
DPI :13141
NISSENS :
APPLICATION :
10-11 CHEVROLET CAMARO 3.6L

GM-42

HONGYAN AUTO PARTS

CHEVROLET/BUICK/CADILLAC/SATURN/GMC

GM-0223

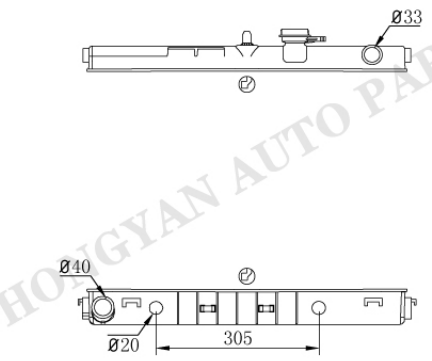

GM-0224AT/MT

Tank size :(R5×6×5×59.5×599)
OEM :
DPI :2855
NISSENS :
APPLICATION :
09-12 CHEVROLET COLORADO 5.3L
10-12 GMC CANYON 5.3L
06-10 HUMMER H3 3.7L

GM-0225

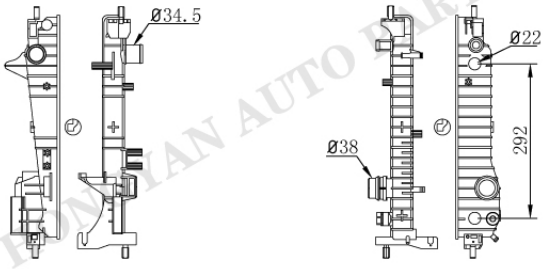

GM-0226AT/MT

Tank size :(R9.5×4.3×5×41.8×420)
OEM :
DPI :13248
NISSENS :
APPLICATION :

GM-0225

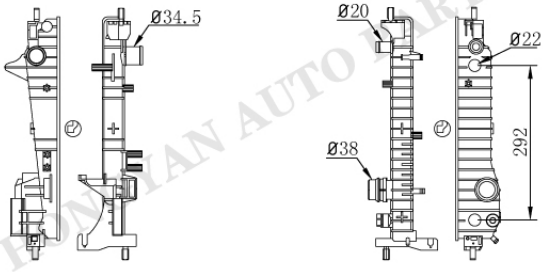

GM-0226-1AT/MT

Tank size :(R9.5×4.3×5×41.8×420)
OEM :
DPI :
NISSENS :
APPLICATION :

GM-0227

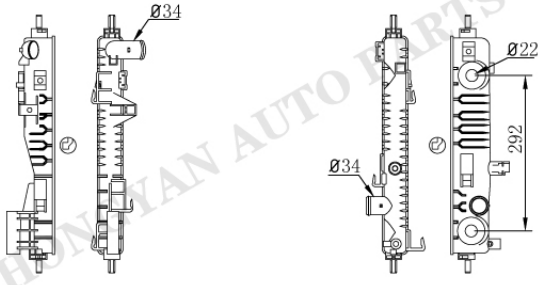

GM-0228AT/MT

Tank size :(R10.5×5×4.3×47.8×407)
OEM :
DPI :13328 13332
NISSENS :
APPLICATION :
13-14 CHEVROLET MALIBU 2.0/2.5L
14-15 CHEVROLET IMPALA 2.5L

HONGYAN AUTO PARTS

CHEVROLET/BUICK/CADILLAC/SATURN/GMC

GM-0229AT/MT

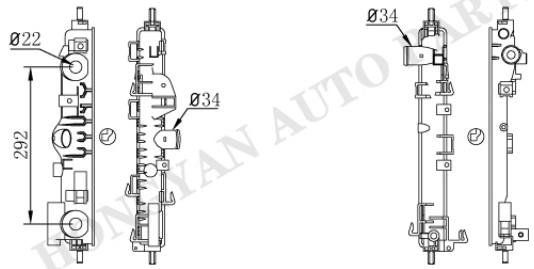

GM-0230

Tank size :(R10.5×5×4.3×47.8×407)
OEM :22747160
DPI :13366
NISSENS :
APPLICATION :
13-15 CADILLAC XTS 3.6L

GM-0229AT/MT

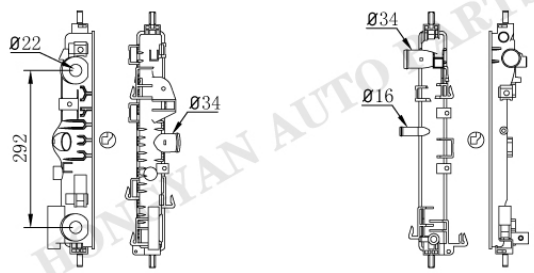

GM-0230-1

Tank size :(R10.5×5×4.3×47.8×407)
OEM :
DPI :
NISSENS :
APPLICATION :
13-15 CADILLAC XTS 3.6L

GM-0231

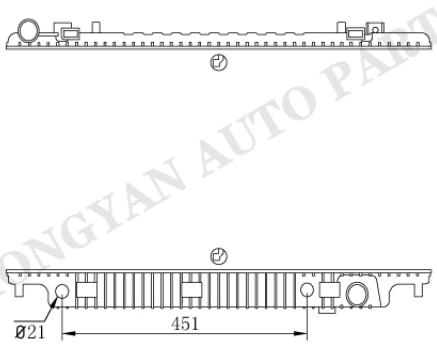

GM-0232AT/MT

Tank size :(R6×4×5.8×55.5×786)
OEM :
DPI :13043
NISSENS :
APPLICATION :
08-09 PONTIAC G8 3.6L

GM-0231-1

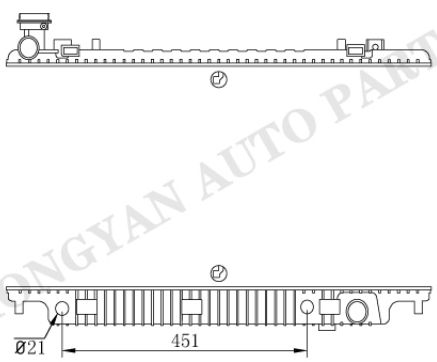

GM-0232AT/MT

Tank size :(R6×4×5.8×55.5×786)
OEM :
DPI :13044
NISSENS :
APPLICATION :
08-09 PONTIAC G8 6.0L
11- CHEVROLET CAPRICE 6.0L

HONGYAN AUTO PARTS

CHEVROLET/BUICK/CADILLAC/SATURN/GMC

GM-0233

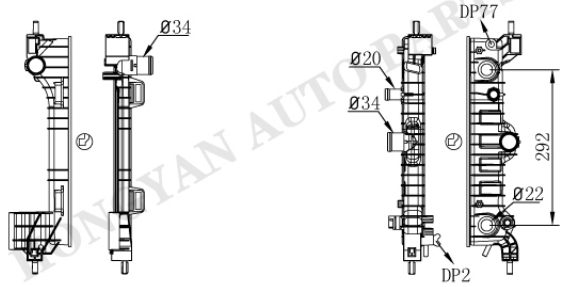

GM-0234AT/MT

Tank size :(R9.5×4×5×32.5/42×395)
OEM :
DPI :
NISSENS :
APPLICATION :
12-14 CHEVROLET SONIC 1.6/1.8L

GM-0235AT/MT

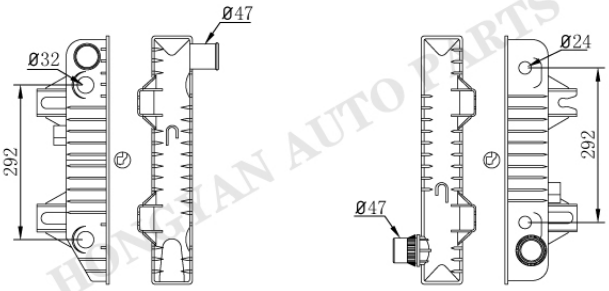

GM-0236AT/MT

Tank size :(R5×6×5×77×466)
OEM :15751216 15897982
DPI :2935
NISSENS :
APPLICATION :
06-15 CHEVROLET EXPRESS 2500 6.6L

GM-0237

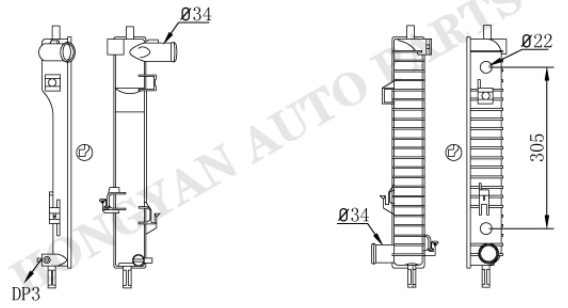

GM-0238AT/MT

Tank size :(R5×4×5×60.8×434)
OEM :15781369
DPI :2879
NISSENS :
APPLICATION :
06-09 CHEVROLET EQUINOX 3.4L

GM-0239AT/MT

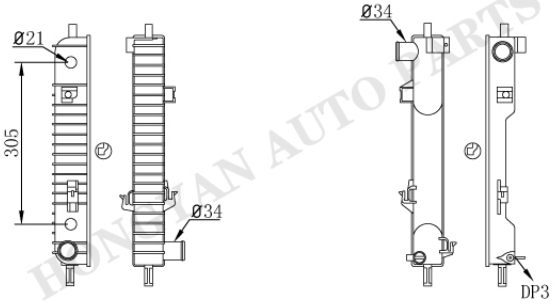

GM-0240

Tank size :(R5×4×5×60.8×434)
OEM :19130404 25952758 25952759
DPI :13103
NISSENS :
APPLICATION :
10-15 CHEVROLET EQUINOX 2.4L

HONGYAN AUTO PARTS

CHEVROLET/BUICK/CADILLAC/SATURN/GMC

GM-0241

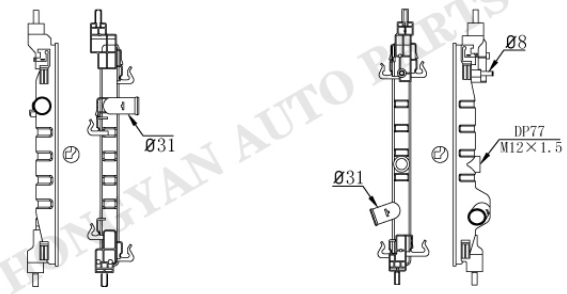

GM-0242

Tank size :(R10×5×5×34.5×419)
OEM :96984450
DPI :
NISSENS :61679 61689
APPLICATION :
10-15 CHEVROLET SPARK 1.2L

GM-0241-1

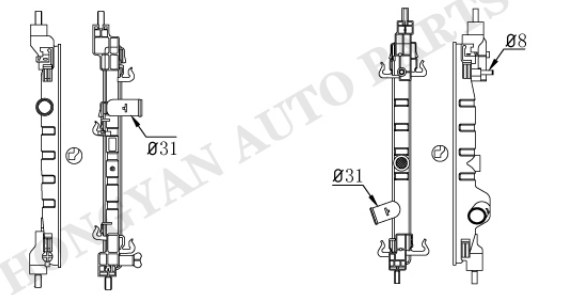

GM-0243

Tank size :(R10×5×5×34.5×419)
OEM :
DPI :
NISSENS :
APPLICATION :
10-15 CHEVROLET SPARK 1.2L

GM-0244

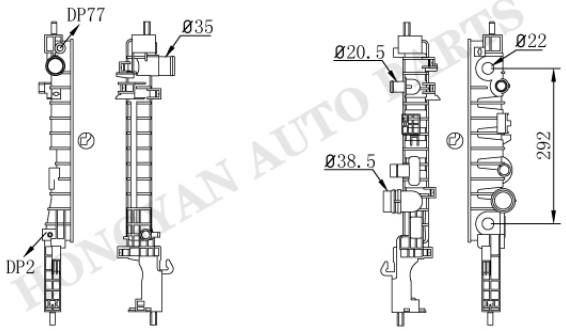

GM-0245AT/MT

Tank size :(R10×5×4.5×48×382)
OEM :
DPI :
NISSENS :
APPLICATION :
12- BUICK

GM-0244

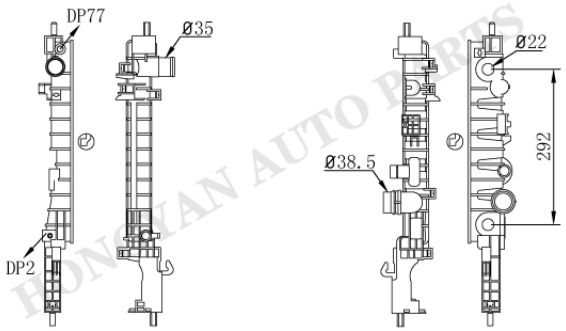

GM-0246AT/MT

Tank size :(R10×5×4.5×48×382)
OEM :
DPI :
NISSENS :
APPLICATION :
12- BUICK

GM-46

HONGYAN AUTO PARTS

CHEVROLET/BUICK/CADILLAC/SATURN/GMC

GM-0247

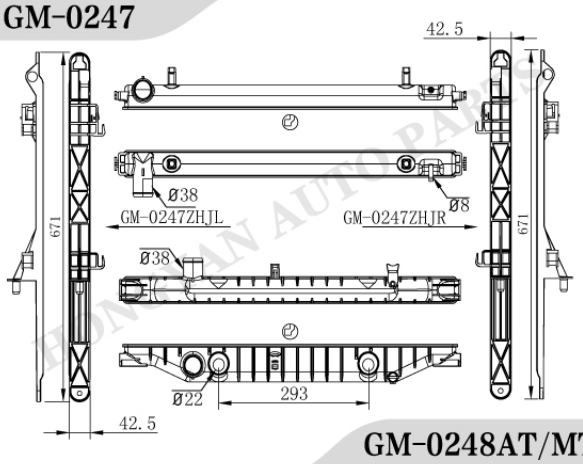

GM-0248AT/MT

Tank size :(R10×5×4.5×48×656.5)
OEM :
DPI :
NISSENS :
APPLICATION :
CHEVROLET COLORADO

GM-0249AT/MT

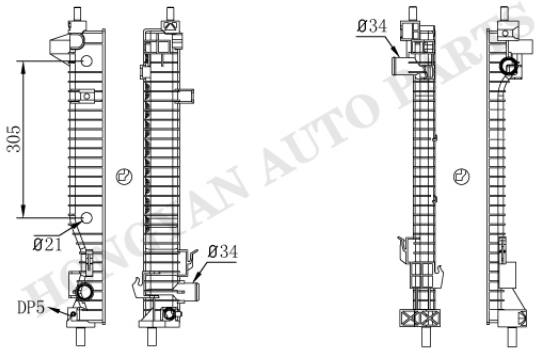

GM-0250

Tank size :(R4.5×4×5×70/42.7×574.5)
OEM :20926497 23428314
DPI :13241
NISSENS :
APPLICATION :
10-15 CADILLAC SRX 3.6L

GM-0251AT/MT

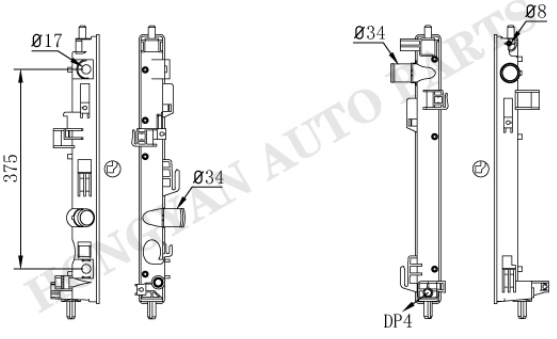

GM-0252

Tank size :(R9×4×5×48×506)
OEM :22966122/3/4
DPI :13349 13350
NISSENS :
APPLICATION :
13-15 CADILLAC ATS 2.0/2.5/3.6L
14-15 CADILLAC CTS 2.0/2.5/3.6L

GM-0253AT/MT

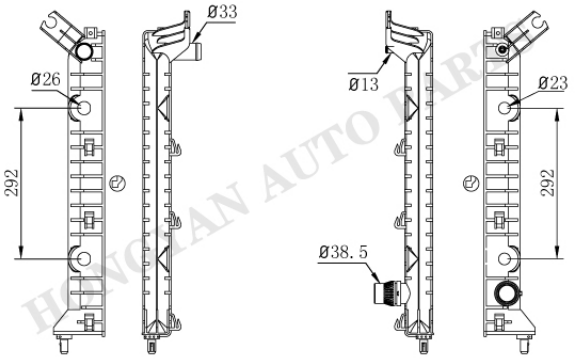

GM-0254AT/MT

Tank size :(R10×5×4.3×55×598.5)
OEM :25838891
DPI :13301
NISSENS :
APPLICATION :
11-14 CHEVROLET SILVERADO 2500/3500 6.0L
11-13 CHEVROLET SUBURBAN 2500 6.0L

CHEVROLET/BUICK/CADILLAC/SATURN/GMC

GM-0255AT/MT

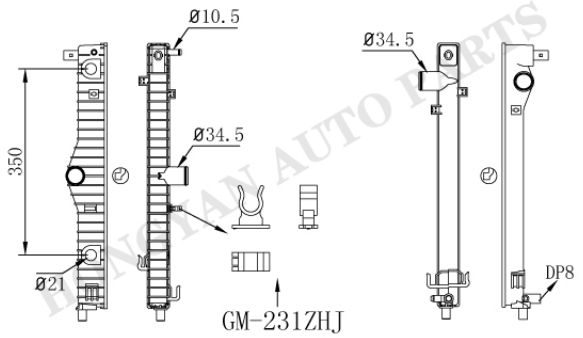

GM-0256

Tank size :(R5×4×5.5×42×499)
OEM :
DPI :
NISSENS :
APPLICATION :
BUICK GL8

GM-0257

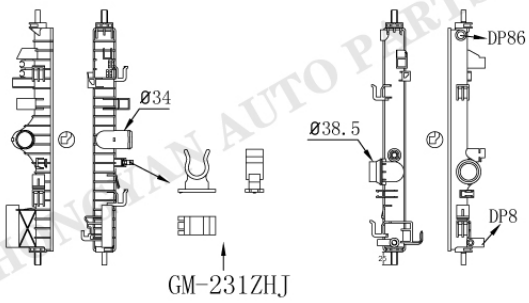

GM-0258

Tank size :(R5×4×5×42×418.5)
OEM :
DPI :
NISSENS :
APPLICATION :
CHEVROLT MALIBU

GM-0259

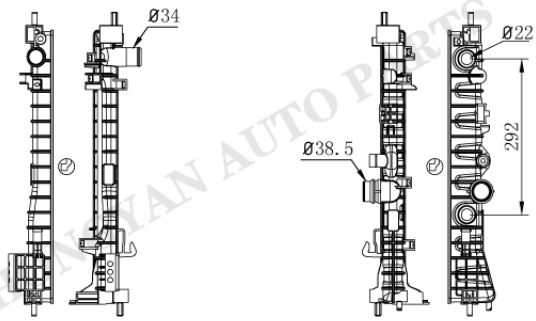

GM-0260AT/MT

Tank size :(R10×4.5×5×48×513.5)
OEM :95136075 95298552
DPI :13361
NISSENS :
APPLICATION :
13-15 BUICK ENCORE 1.4L T

GM-0261

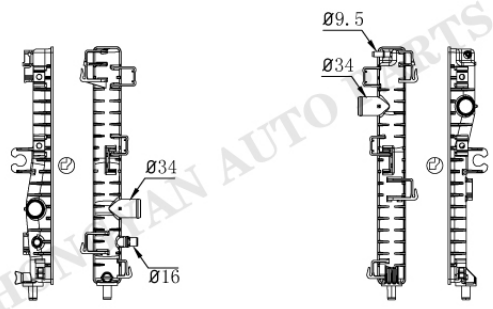

GM-0262

Tank size :(R10×3.5×5×54.5×446)
OEM :20979405 23217826
DPI :13462 13453
NISSENS :
APPLICATION :
14-15 CHEVROLET CORVETTE 6.2L

HENGTAN AUTO PARTS

GM-48

CHEVROLET/BUICK/CADILLAC/SATURN/GMC

GM-0263

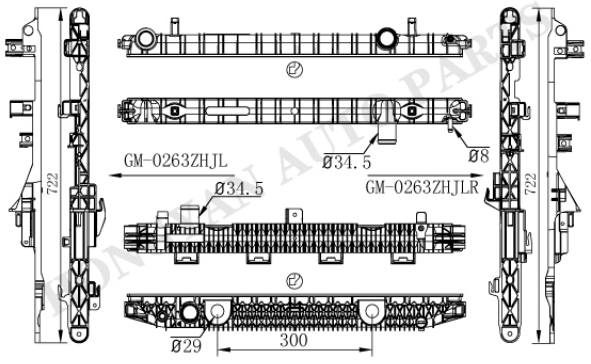

GM-0264AT/MT

Tank size :(R4.5×4.5×5×49×651)
OEM :94778493
DPI :13501
NISSENS :
APPLICATION :
15- CHEVROLET COLORADO 2.5L

GM-0265

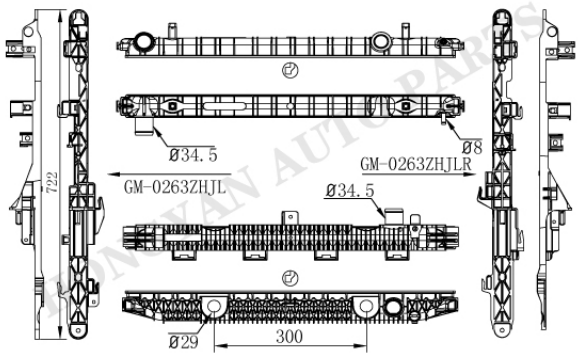

GM-0266AT/MT

Tank size :(R4.5×4.5×5×49×651)
OEM :94778491
DPI :13500
NISSENS :
APPLICATION :
15- CHEVROLET COLORADO 3.6L

GM-0267

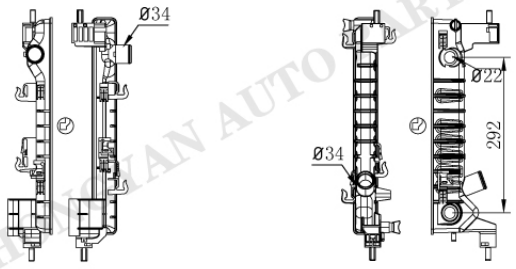

GM-0268AT/MT

Tank size :(R10.5×5×4.5×47.8×407.8)
OEM : 95316032 95460091
DPI :
NISSENS :
APPLICATION :
11- CHEVROLET AVEO 1.4L

GM-0267

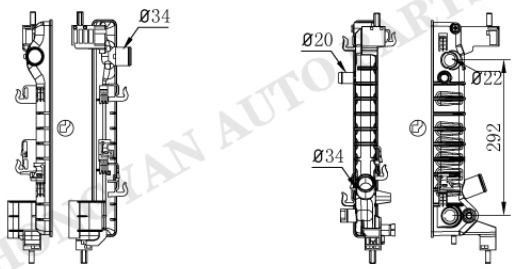

GM-0269AT/MT

Tank size :(R10.5×5×4.5×47.8×407.8)
OEM :95460091/94 95316032
DPI :
NISSENS :61678
APPLICATION :
11-15 CHEVROLET AVEO 1.2L/1.4T
11-15 CHEVROLET SONIC

CHEVROLET/BUICK/CADILLAC/SATURN/GMC

GM-0213AT/MT

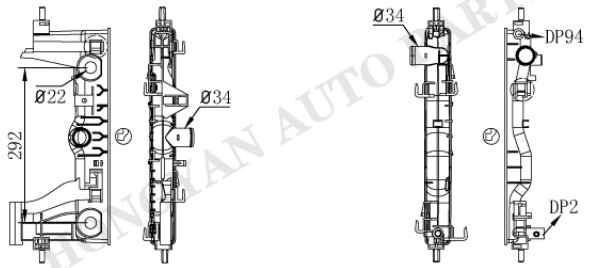

GM-0270

Tank size :(R10×5×4.5×48×408)
OEM :
DPI :
NISSENS :61677
APPLICATION :
09-15 CHEVROLET CRUZE 1.6L

GM-0271AT/MT

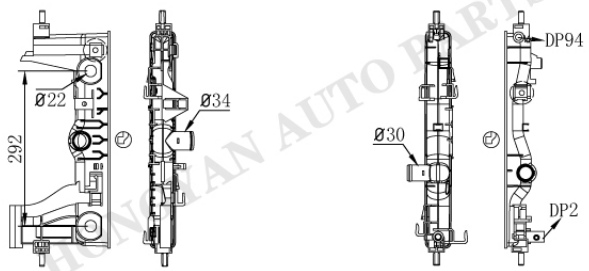

GM-0272

Tank size :(R10×5×4.5×48×408)
OEM :
DPI :
NISSENS :
APPLICATION :

GM-0271AT/MT

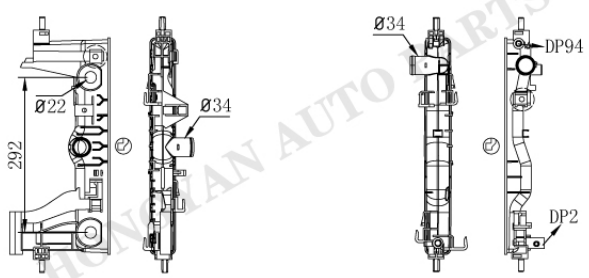

GM-0273

Tank size :(R10×5×4.5×48×408)
OEM :
DPI :
NISSENS :
APPLICATION :

GM-0274AT/MT

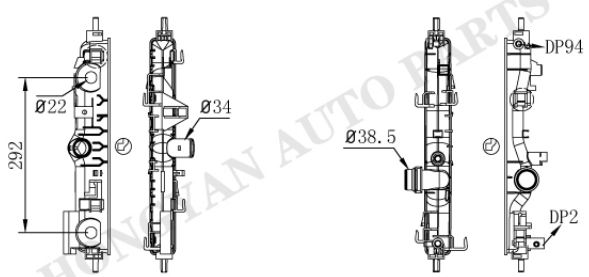

GM-0214

Tank size :(R10×5×4.5×48×408)
OEM :
DPI :13197
NISSENS :
APPLICATION :
10-15 CHEVROLET CRUZE 1.4LT/1.7DT/1.8L

HONGYAN AUTO PARTS

CHEVROLET/BUICK/CADILLAC/SATURN/GMC

GM-0274AT/MT

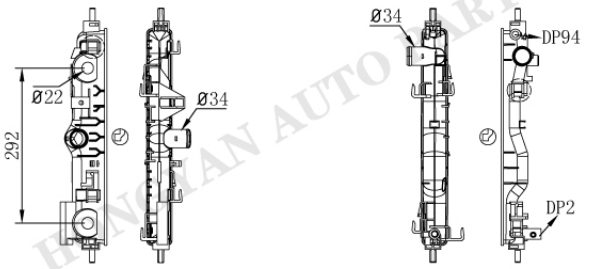

GM-0270

Tank size :(R10×5×4.5×48×408)
OEM :
DPI :13246
NISSENS :
APPLICATION :
12-15 BUICK VERANO
14-15 CHEVROLET ORLANDO

GM-0275AT/MT

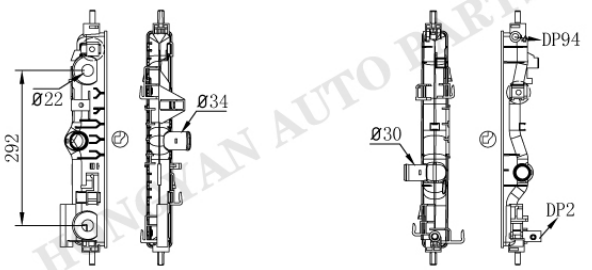

GM-0272

Tank size :(R10×5×4.5×48×408)
OEM :
DPI :
NISSENS :
APPLICATION :

GM-0275AT/MT

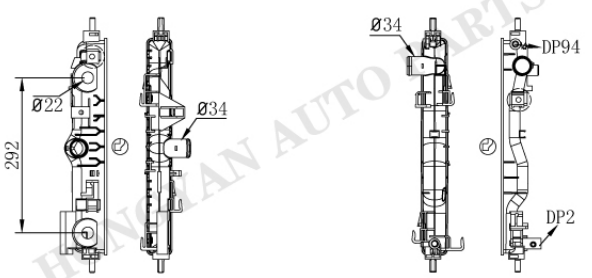

GM-0273

Tank size :(R10×5×4.5×48×408)
OEM :
DPI :13146
NISSENS :
APPLICATION :
10-15 BUICK LACROSSE 2.4/3.6L
11-15 BUICK REGAL 2.0L/2.4/3.6L
14-15 CHEVROLET IMPALA 2.4/3.6L
13-14 CHEVROLET MALIBU 2.4/3.6L

GM-0276



GM-0277

Tank size :(R5.5×4.2×5.5×31.8×403.5)
OEM :
DPI :
NISSENS :
APPLICATION :

HONGYAN AUTO PARTS

CHEVROLET/BUICK/CADILLAC/SATURN/GMC

GM-0278



GM-0279AT/MT

Tank size :(R4×4×5.5×41×441)
OEM :22942968
DPI :
NISSENS :
APPLICATION :
BUICK ENVISION
15- BUICK ENVISION 1.5L T

GM-0278



GM-0280AT/MT

Tank size :(R4×4×5.5×41×441)
OEM :22942965
DPI :
NISSENS :
APPLICATION :
15- BUICK ENVISION 2.0L

GM-0281



GM-0282

Tank size :(R9.5×4.2×4.5×44×324)
OEM :
DPI :
NISSENS :
APPLICATION :

GM-0283



GM-0284

Tank size :(R10×4.2×4.6×30.5×406.5)
OEM :
DPI :
NISSENS :
APPLICATION :

HONGYAN AUTO PARTS

GM-52

CHEVROLET/BUICK/CADILLAC/SATURN/GMC

GM-0285AT/MT

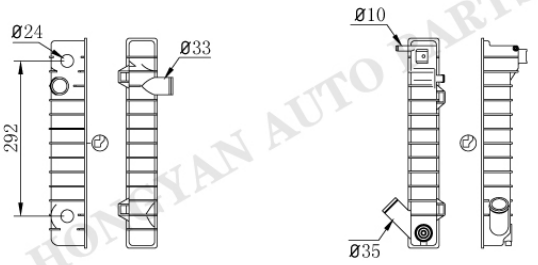

GM-0286

Tank size : (R5×6×4×58×395)
OEM :
DPI :768
NISSENS :
APPLICATION :
89-94 CHEVROLET CAVALIER BASE 3.1L

GM-0285AT/MT

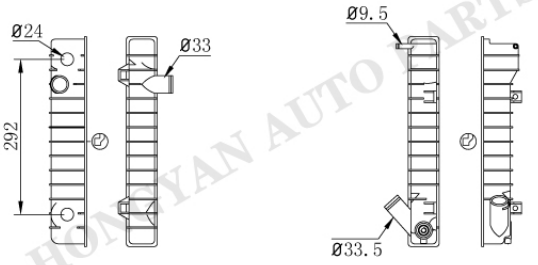

GM-0287

Tank size : (R5×6×4×58×395)
OEM :
DPI :612
NISSENS :
APPLICATION :
88-89 CADILLAC CIMARRON BASE 2.8L

GM-0288AT/MT

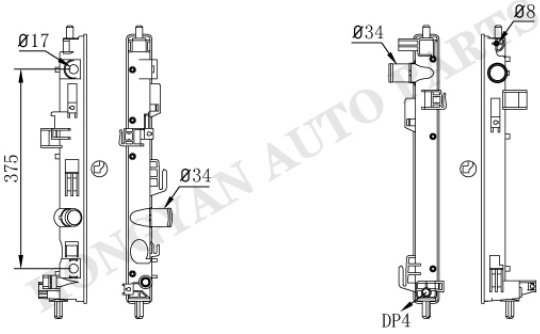

GM-0252

Tank size :(R9×4×5×48×506)
OEM :22966122/3 /4
DPI :13349 13350
NISSENS :
APPLICATION :
13-15 CADILLAC ATS 2.0/2.5/3.6L
14-15 CADILLAC CTS 2.0/2.5/3.6L

GM-0289

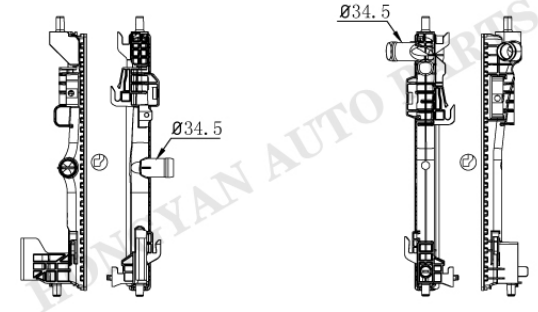

GM-0290

Tank size :(R5.5×4×5.5×41.5×482.5)
OEM :
DPI :
NISSENS :
APPLICATION :
2016- CADILLAC CT6 2.0L

HONGYAN AUTO PARTS

CHEVROLET/BUICK/CADILLAC/SATURN/GMC

GM-0291AT/MT

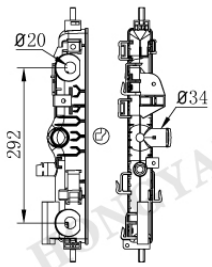

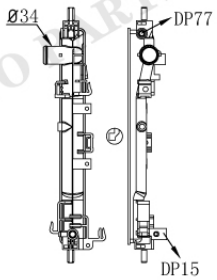

GM-0230

Tank size :(R10.5×5×4.3×47.8×407)
OEM :22747160
DPI :13366
NISSENS :
APPLICATION :
13-15 CADILLAC XTS 3.6L

GM-0227

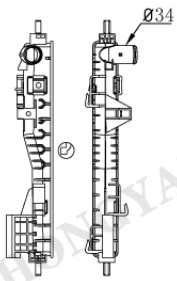

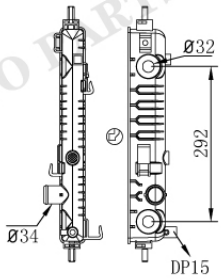

GM-0292AT/MT

Tank size :(R10.5×5×4.3×47.8×407)
OEM :
DPI :13328 13332
NISSENS :
APPLICATION :
13-15 CHEVROLET MALIBU 2.0/2.5L
14-15 CHEVROLET IMPALA 2.5L

GM-0293

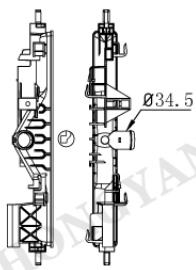

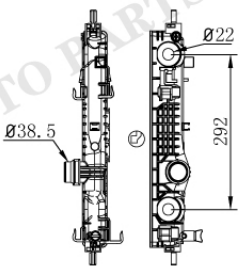

GM-0294AT/MT

Tank size :(R10×4.5×4.9×48×407.5)
OEM :
DPI :
NISSENS :
APPLICATION :
15- CV CRUZE 1.8L

GM-0295

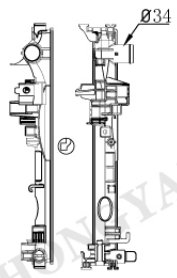

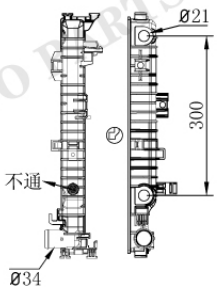

GM-0296AT/MT

Tank size :(R5.5×4×5.5×48×445)
OEM :
DPI :
NISSENS :
APPLICATION :
16- CV MALIBU 1.5L

HUNGYAN AUTO PARTS

CHEVROLET/BUICK/CADILLAC/SATURN/GMC

GM-0295

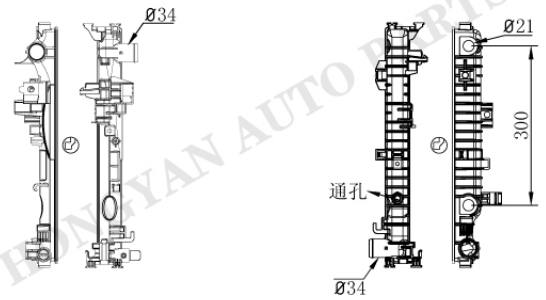

GM-0297AT/MT

Tank size :(R5.5×4×5.5×48×445)
OEM :
DPI :
NISSENS :
APPLICATION :
16- CV MALIBU 1.5L

GM-0295

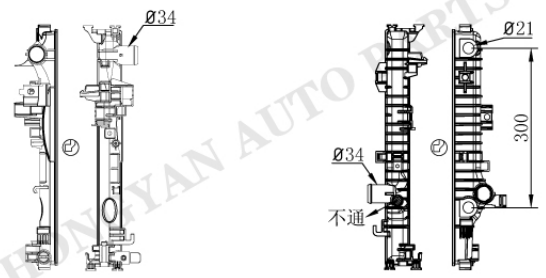

GM-0298AT/MT

Tank size :(R5.5×4×5.5×48×445)
OEM :
DPI :
NISSENS :
APPLICATION :
16- CV MALIBU 1.5L

GM-0295

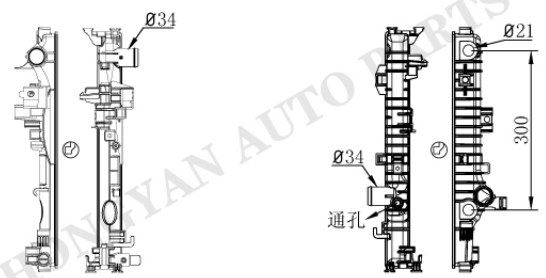

GM-0299AT/MT

Tank size :(R5.5×4×5.5×48×445)
OEM :
DPI :
NISSENS :
APPLICATION :
16- CV MALIBU 1.5L

GM-0300

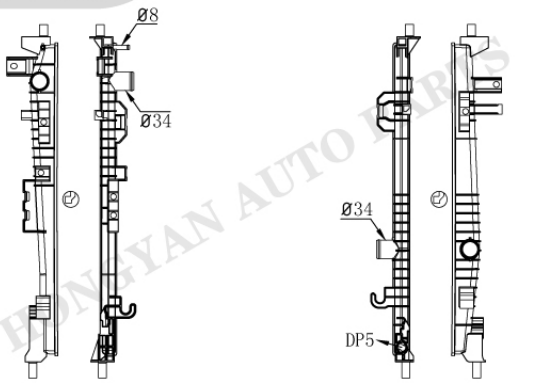

GM-0301

Tank size :(R5.5×4×5.5×31.7×589)
OEM :
DPI :
NISSENS :
APPLICATION :
15- CADILAC XT5

HONGYAN AUTO PARTS

CHEVROLET/BUICK/CADILLAC/SATURN/GMC

GM-0302

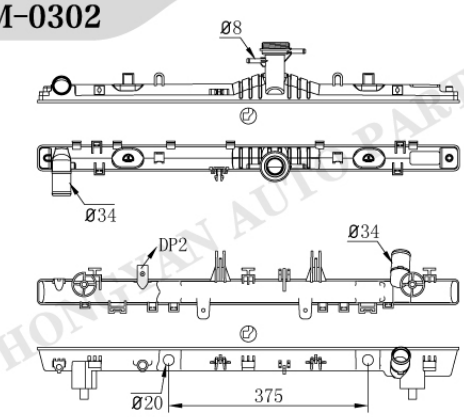

GM-0303AT/MT

Tank size :(R9.5×4×4.5×48×794)
OEM :22786864 22786865
DPI :13341
NISSENS :
APPLICATION :
12-15 CHEVROLET CAMARO 3.6/6.2L

GM-0302

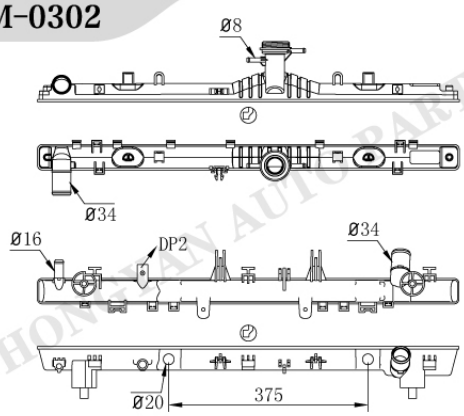

GM-0304AT/MT

Tank size :(R9.5×4×4.5×48×794)
OEM :22762595 22879423
DPI :13344 13345
NISSENS :
APPLICATION :
12-15 CHEVROLET CAMARO 3.6L

GM-0305AT/MT

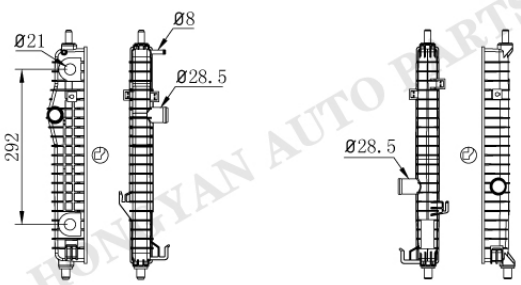

GM-0306

Tank size :(R5.5×4×5×41.5×408)
OEM :
DPI :
NISSENS :
APPLICATION :
15- CHEVROLET LOVA RV 1.5L

GM-0307

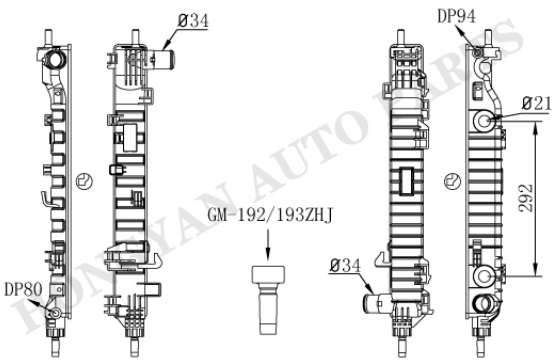

GM-0308AT/MT

Tank size :(R11×4.5×5×63×517)
OEM :
DPI :
NISSENS :
APPLICATION :
16- CHEVROLET

HONGYAN AUTO PARTS

CHEVROLET/BUICK/CADILLAC/SATURN/GMC

GM-0001AT/MT

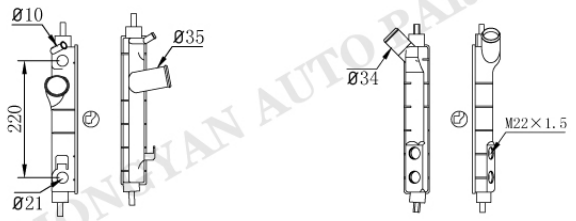

GM-0309

Tank size :(R3.5×5×4.5×48×280)
OEM :1300152
DPI :
NISSENS :
APPLICATION :
94-96 CORSA

GM-0310

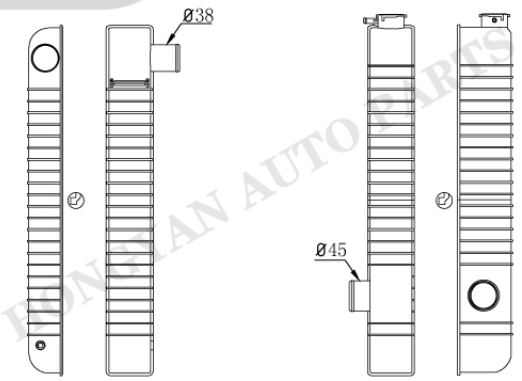

GM-0311

Tank size :(R8×6×4×88.5×659.5)
OEM :
DPI :
NISSENS :
APPLICATION :

GM-0312

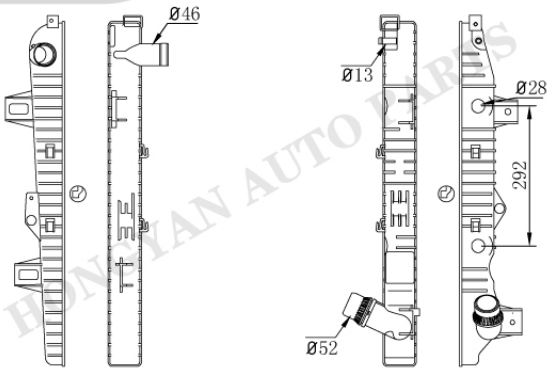

GM-0313AT/MT

Tank size :(R9.5×5×5×69.5×721)
OEM :
DPI :13244
NISSENS :
APPLICATION :
11-16 GMC SIERRA 6.6L
11-16 CHEVROLET SILVERADO 6.6L

GM-0314

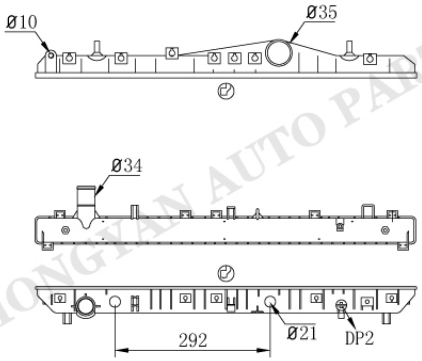

GM-0004AT/MT

Tank size :(R9×4×5×52×717)
OEM :96553243/244/423
DPI :2788
NISSENS :61634
APPLICATION :
04-10 BUICK EXCELLE 1.6/1.8L
04-10 CHEVROLET LACETTI 1.6/1.8L
03-10 CHEVROLET NUBIRA 1.6/1.8L
03- SUZKI FORDNZA 1.6/1.8L

HONGYAN AUTO PARTS

CHEVROLET/BUICK/CADILLAC/SATURN/GMC

GM-0315AT/MT

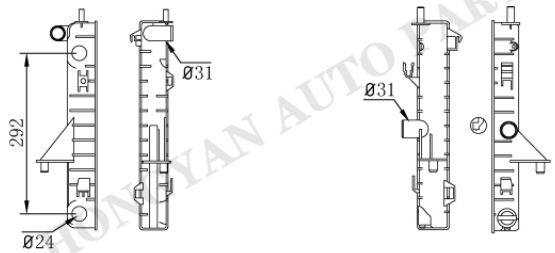

GM-0316

Tank size :(R5×5×5×58×393)
OEM :
DPI :2191
NISSENS :
APPLICATION :
94-02 SATURN SC1/SC2 1.9L
94-02 SATURN SL/SL1/SL2 1.9L
94-02 SATURN SW1/SW2 1.9L

GM-0033AT/MT

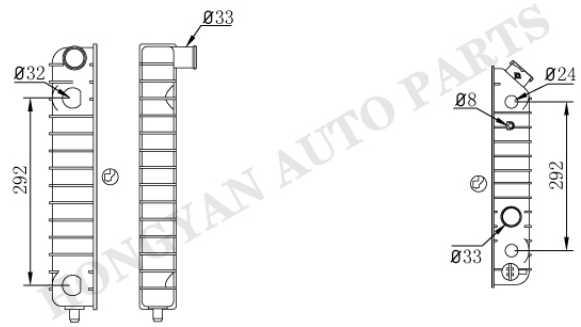

GM-0317AT/MT

Tank size :(R5×6×5×58×417)
OEM :
DPI :
NISSENS :
APPLICATION :
96-05 CHEVROLET BLAZER 4.3L
96-05 GMC JIMMY 4.3L
96-05 GMC SONOMA 4.3L

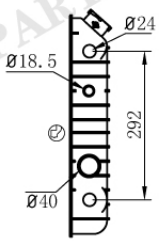

GM-0319AT/MT

Tank size :(R5×5×5×58×417)
OEM :
DPI :206 221 247 623
NISSENS :
APPLICATION :
87-93 CHEVROLET LLV 2.5L
85-93 CHEVROLET S10 2.5L
85-90 GMC S15 2.5L
91-93 GMC SONOMA 2.5L

GM-0015

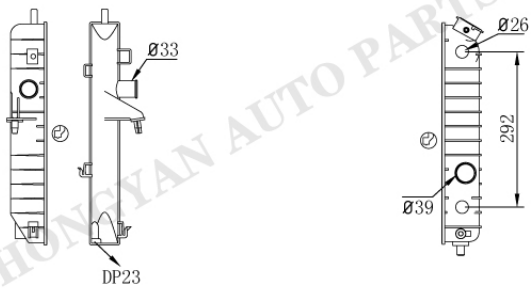

GM-0320AT/MT

Tank size :(R5×6×5×58×417)
OEM :
DPI :2492
NISSENS :
APPLICATION :
01-02 OLDSMOBILE AURORA 3.5L

HONGYAN AUTO PARTS

CHEVROLET/BUICK/CADILLAC/SATURN/GMC

GM-0321



GM-0322AT/MT

Tank size :(R7.5×6×5×58.5×473)
OEM :
DPI :1777 1779
NISSENS :
APPLICATION :
95-99 BUICK RIVIERA 3.8L

GM-0323



GM-0324AT/MT

Tank size :(R4.5×4.5×5×59×466)
OEM :
DPI :1881 2595
NISSENS :
APPLICATION :
00-01 CADILLAC CATERA 3.6L

GM-0325



GM-0326AT/MT

Tank size :(R5×6.3×4.8×62×526.5)
OEM :
DPI :1599
NISSENS :
APPLICATION :
81-86 CHEVROLET C10 5.0/5.7L
87- CHEVROLET BLAZER 5.0L

GM-0327



GM-0328AT/MT

Tank size :(R5×5.8×4.8×77×522)
OEM :
DPI :730
NISSENS :
APPLICATION :
75-86 CHEVROLET C10 5.7/6.6/7.4L
73- CHEVROLET BLAZE 7.4L

GM-0017AT/MT

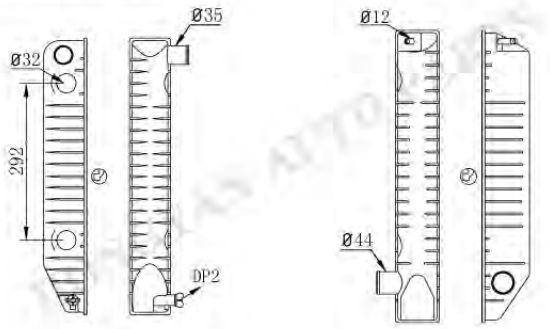

GM-0329

Tank size :(R5×6×5×77×521)
OEM :
DPI :
NISSENS :
APPLICATION :

GM-0166-1AT/MT

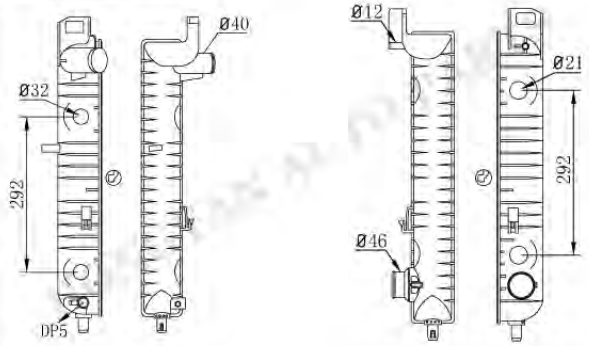

GM-0330AT/MT

Tank size :(R5×6×5×77×521)
OEM :
DPI :
NISSENS :
APPLICATION :

GM-0179AT/MT

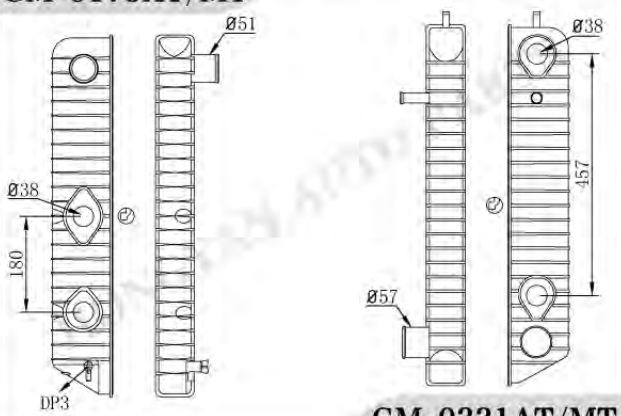

GM-0331AT/MT

Tank size :(R4×6×4.5×77×681)
OEM :
DPI :
NISSENS :
APPLICATION :

GM-0332AT/MT

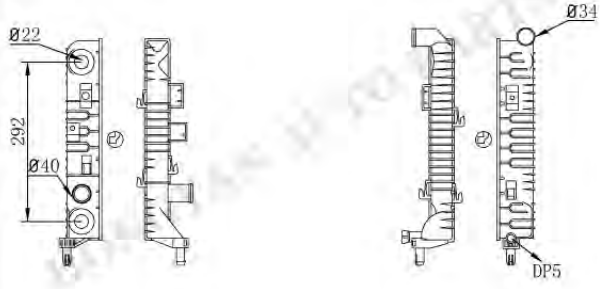

GM-0333

Tank size :(R10.5×5×4.5×48×378)
OEM :
DPI :13326
NISSENS :
APPLICATION :
12-13 CHEVROLET IMPALA 3.6L

GM-60

CHEVROLET/BUICK/CADILLAC/SATURN/GMC

GM-0334AT/MT

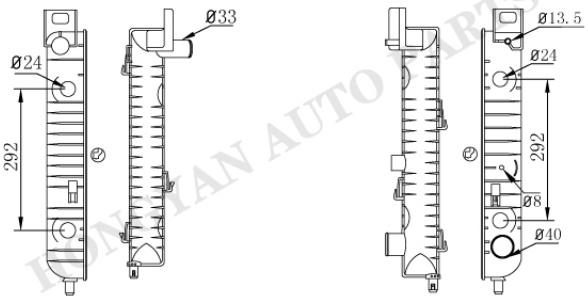

GM-0335AT/MT

Tank size :(R5×6×5×58×472)
OEM :
DPI :13419
NISSENS :
APPLICATION :
10-13 CADILLAC ESCALADE 6.0L
09-13 CHEVROLET SILVERADO 6.0L
08-13 CHEVROLET TAHOE 6.0L
09-13 GMC SIERRA 6.0L
08-13 GMC YUKON 6.0L

GM-0334AT/MT

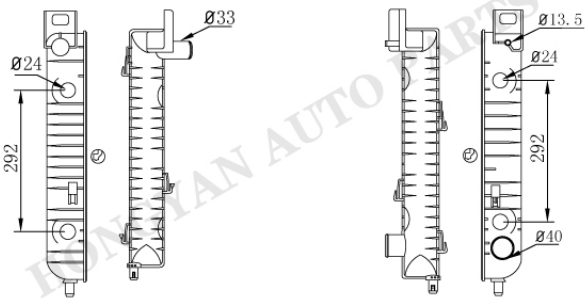

GM-0336AT/MT

Tank size :(R5×6×5×58×472)
OEM :
DPI :
NISSENS :
APPLICATION :
10-13 CADILLAC ESCALADE 6.0L
09-13 CHEVROLET SILVERADO 6.0L
08-13 CHEVROLET TAHOE 6.0L
09-13 GMC SIERRA 6.0L
08-13 GMC YUKON 6.0L

GM-0274AT/MT

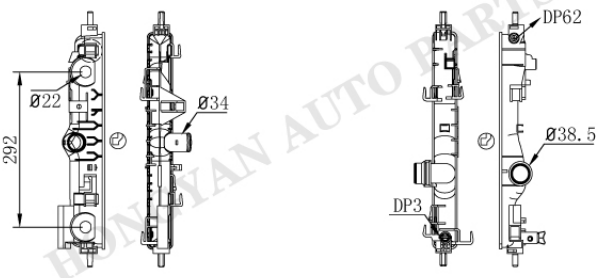

GM-0337

Tank size :(R10×5×4.5×48×408)
OEM :
DPI :13471
NISSENS :
APPLICATION :
14-15 CHEVROLET CRUZE 2.0L

Tank size :
OEM :
DPI :
NISSENS :
APPLICATION :

HONGYAN AUTO PARTS

	Tank size : OEM : DPI : NISSENS : APPLICATION :
	Tank size : OEM : DPI : NISSENS : APPLICATION :
	Tank size : OEM : DPI : NISSENS : APPLICATION :
	Tank size : OEM : DPI : NISSENS : APPLICATION :

HONGYAN AUTO PARTS

CHEVROLET/BUICK/CADILLAC/SATURN/GMC

	Tank size : OEM : DPI : NISSENS : APPLICATION :
	Tank size : OEM : DPI : NISSENS : APPLICATION :
	Tank size : OEM : DPI : NISSENS : APPLICATION :
	Tank size : OEM : DPI : NISSENS : APPLICATION :

HONGYAN AUTO PARTS

HONDA/ACURA

HO-0001

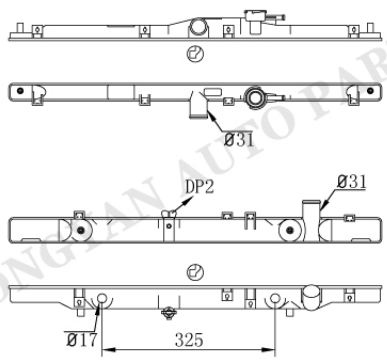

HO-0002AT/MT

Tank size :(R8.5×4×5×33/48×699.8)
OEM :19010PAAA01/POFJ01
DPI :1494 1815
NISSENS :
APPLICATION :
97-99 ACURA CL 2.2/2.3L
94-97 HONDA ACCORD 2.2L
97-01 HONDA PRELUDE 2.2L

HO-0003

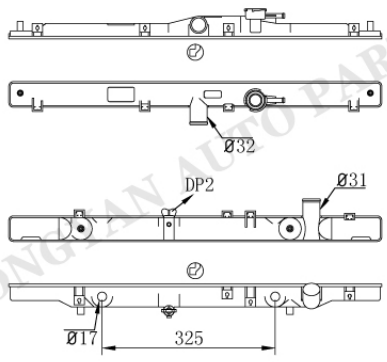

HO-0002AT/MT

Tank size :(R8.5×4×5×48×699.8)
OEM :19010PIE/A51/PAAA51/01
DPI :1581
NISSENS :
APPLICATION :
94-97 HONDA ACCORD 2.2L

HO-0001

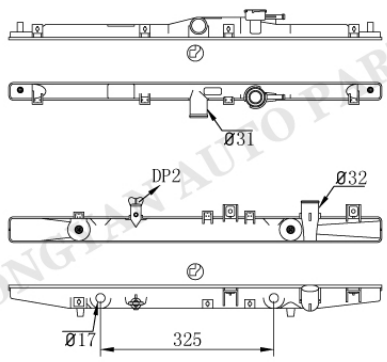

HO-0004AT/MT

Tank size :(R8.5×4×5×33/48×699.8)
OEM :19010DAAA01/PCA013/014
DPI :2148 2159 2158
NISSENS :
APPLICATION :
98-02 HONDA ACCORD 2.3L

HO-0003

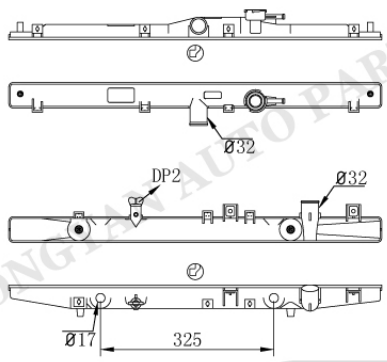

HO-0004AT/MT

Tank size :(R8.5×4×5×48×699.8)
OEM :19010DAAA02
DPI :
NISSENS :
APPLICATION :
98-02 HONDA ACCORD 2.3L

HONGTAN AUTO PARTS

HONDA/ACURA

HO-0005

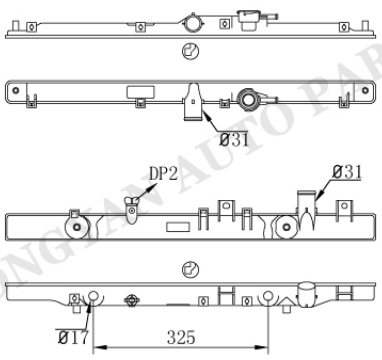

HO-0006AT/MT

Tank size :(R8.5×4×5×43/50×694.5)
OEM :19010PAAA52
DPI :2203
NISSENS :
APPLICATION :
98-02 HONDA ACCORD 2.3L

HO-0007

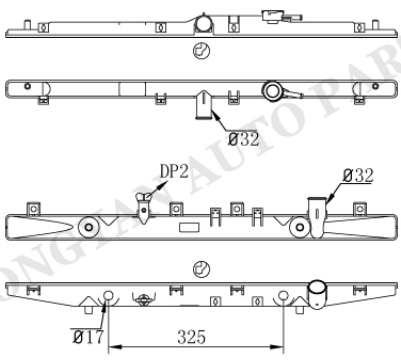

HO-0008AT/MT

Tank size :(R9×4×5×33/48×736)
OEM :19010PGM902/901
DPI :
NISSENS :
APPLICATION :

HO-0009

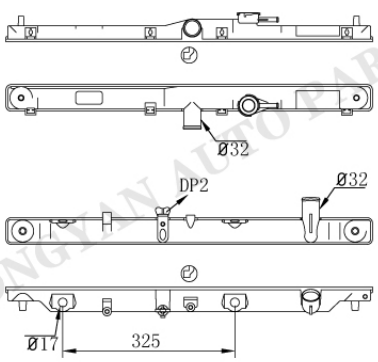

HO-0010AT/MT

Tank size :(R9.5×5×5×50×687.3)
OEM :19010PT1901/02/03/05
DPI :19 1940
NISSENS :
APPLICATION :
90-93 HONDA ACCORD 2.2L

HO-0011

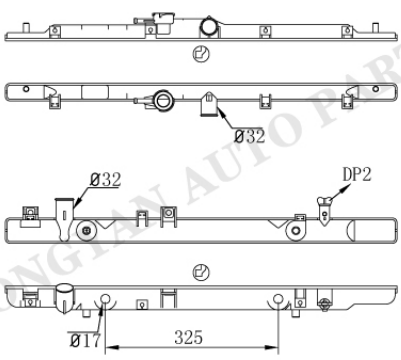

HO-0012AT/MT

Tank size :(R8.5×4×5×33/48×736)
OEM :19010P8CA51
DPI :2147
NISSENS :
APPLICATION :
99-01 ACURA TL 3.2L
98-02 HONDA ACCORD 3.0L

HONGTIAN AUTO PARTS

HONDA/ACURA

HO-0013

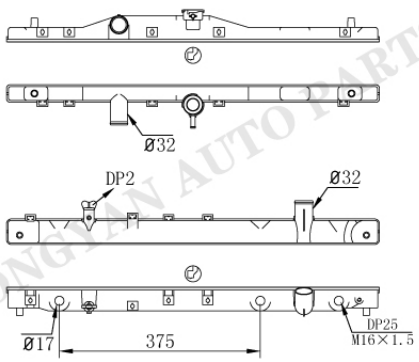

HO-0014AT/MT

Tank size :(R8.5×4×5×33/48×697.8)
OEM :19010P5A003
DPI :1912
NISSENS :
APPLICATION :
96-04 ACURA RL 3.5L

HO-0015

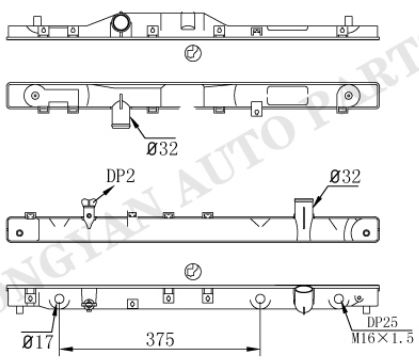

HO-0014AT/MT

Tank size :(R8.5×4×5×48×697.8)
OEM :19010PY3901/A01
DPI :1278 1951
NISSENS :
APPLICATION :
91-95 ACURA LEGEND 3.2L

HO-0016

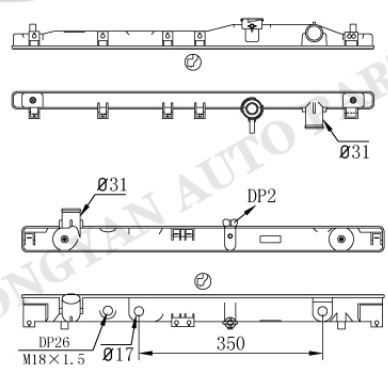

HO-0017AT/MT

Tank size :(R9×4×5×33/48×678.3)
OEM :19010PIR902/1
DPI :2030 2209
NISSENS :
APPLICATION :
95-98 ACURA TL 2.5L

HO-0016

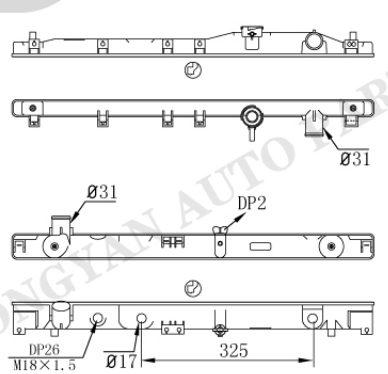

HO-0017-1AT

Tank size :(R9×4×5×33/48×678.3)
OEM :
DPI :
NISSENS :
APPLICATION :
95-98 ACURA TL 2.5L

HONGYAN AUTO PARTS

HONDA/ACURA

HO-0018

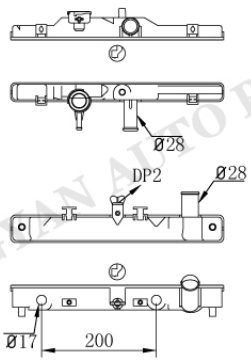

HO-0019AT/MT

Tank size :(R9×4×5×33/48×370.8)
OEM :19010P03901/1003/004
DPI :1290 1328 1952 1953 2273
NISSENS :
APPLICATION :
97-00 ACURA EL 1.6L
92-00 HONDA CIVIC 1.5/1.6L

HO-0020

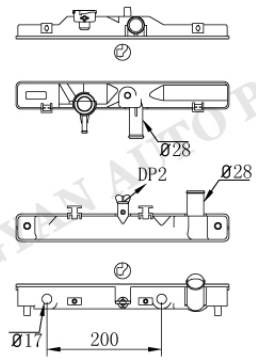

HO-0019AT/MT

Tank size :(R9×4×5×48×370.8)
OEM :19010P28G51/P08004
DPI :1419 2274
NISSENS :
APPLICATION :
92-00 HONDA CIVIC 1.5/1.6L

HO-0021

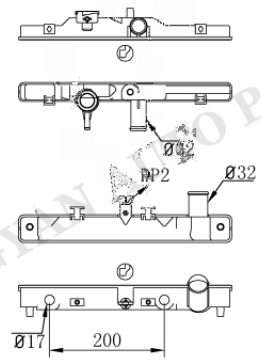

HO-0022AT/MT

Tank size :(R9×4×5×33/48×370.8)
OEM :19010P30J02/3/4
DPI :
NISSENS :
APPLICATION :
92-00 HONDA CIVIC 1.5/1.6L

HO-0023

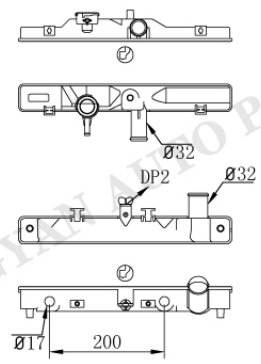

HO-0022AT/MT

Tank size :(R9×4×5×48×370.8)
OEM :19010P30G01
DPI :1570
NISSENS :
APPLICATION :
92-00 HONDA CIVIC 1.5/1.6L

HONGYAN AUTO PARTS

HONDA/ACURA

HO-0024

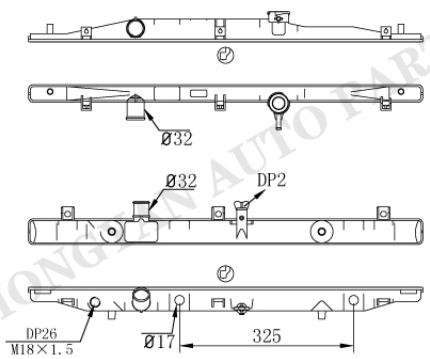

HO-0025AT/MT

Tank size :(R9×4×5×33/48×736)
OEM :19010RAAA61/A01
DPI :2569 2599 2797
NISSENS :
APPLICATION :
03-04 HONDA ACCORD 2.4L

HO-0026

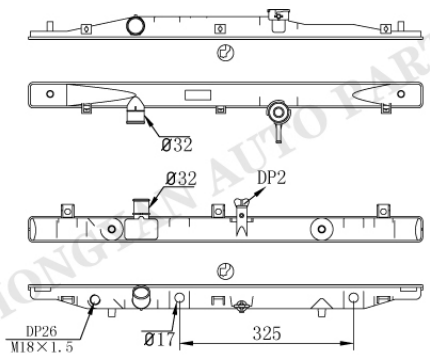

HO-0025AT/MT

Tank size :(R9×4×5×48×736)
OEM :
DPI :
NISSENS :
APPLICATION :
03-04 HONDA ACCORD 2.4L

HO-0027

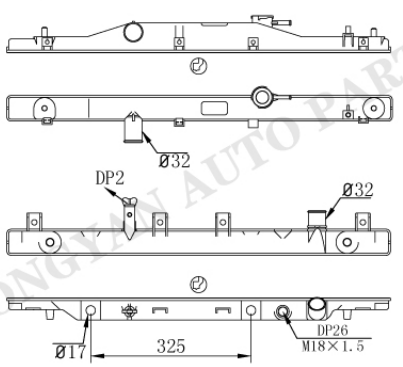

HO-0028AT/MT

Tank size :(R9×4×5×48×717)
OEM :19010PND901/003
DPI :2412 2425
NISSENS :
APPLICATION :
02-06 ACURA RSX 2.0L

HO-0029

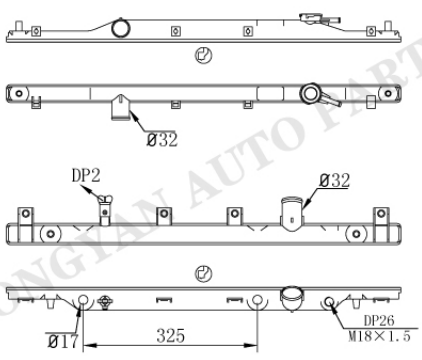

HO-0030AT/MT

Tank size :(R9×4×5×33/40×736)
OEM :19010PNC901/151
DPI :
NISSENS :
APPLICATION :

HONGYAN AUTO PARTS

HONDA/ACURA

HO-0031

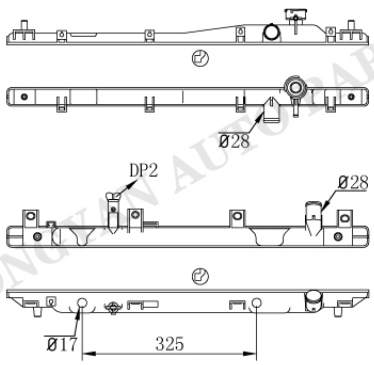

HO-0032AT/MT

Tank size :(R9×4.5×5×34.5/39.5×675.5)
OEM :19010PMMA51/01/PLC901
DPI :2354 2355
NISSENS :
APPLICATION :
01-05 ACURA EL 1.7L
01-05 HONDA CIVIC 1.7L

HO-0033

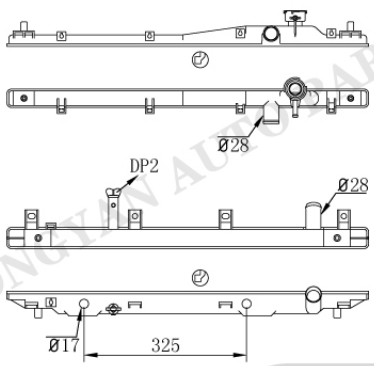

HO-0034AT/MT

Tank size :(R9×4×5×33/40×678.3)
OEM :19010PMMA51/01/PLC901
DPI :2354 2355
NISSENS :
APPLICATION :
01-05 ACURA EL 1.7L
01-05 HONDA CIVIC 1.7L

HO-0035

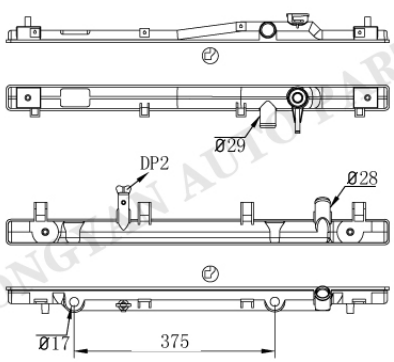

HO-0036AT/MT

Tank size :(R9×5×5×48×717)
OEM :19010PSA901
DPI :
NISSENS :
APPLICATION :
01-04 HONDA STREAM 1.7L

HO-0037

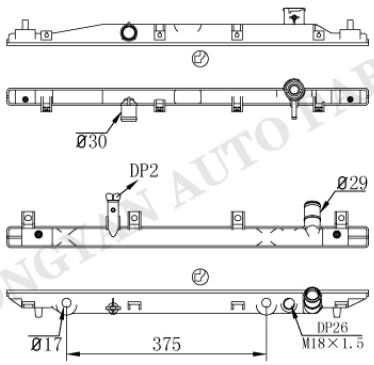

HO-0038AT/MT

Tank size :(R9×4×5×33/40×678.3)
OEM :19010PZAA51
DPI :2572
NISSENS :
APPLICATION :
03-05 HONDA CIVIC 1.3L

HONGYAN AUTO PARTS

HONDA/ACURA

HO-0039

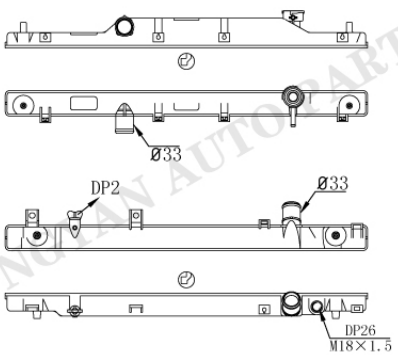

HO-0040

Tank size :(R9×4×5×48×678.3)
OEM :19010PRA003
DPI :2574
NISSENS :
APPLICATION :
02-05 HONDA CIVIC 2.0L

HO-0041

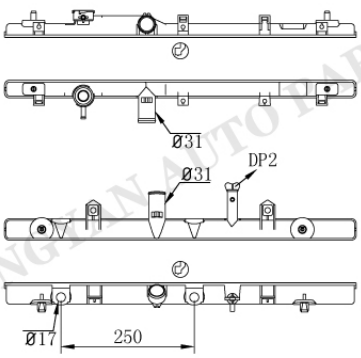

HO-0042AT/MT

Tank size :(R9×4×5×33/40×660)
OEM :
DPI :
NISSENS :
APPLICATION :

HO-0043

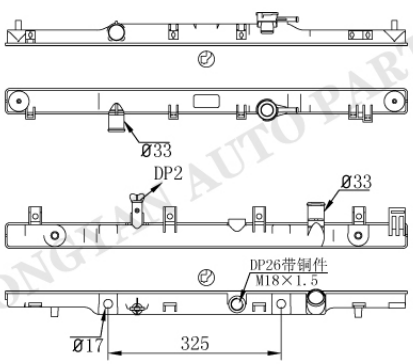

HO-0044AT/MT

Tank size :(R9×4×5×48×755)
OEM :19010PPAA51/PNB003
DPI :
NISSENS :
APPLICATION :
02-06 HONDA CR-V 2.4L

HO-0043

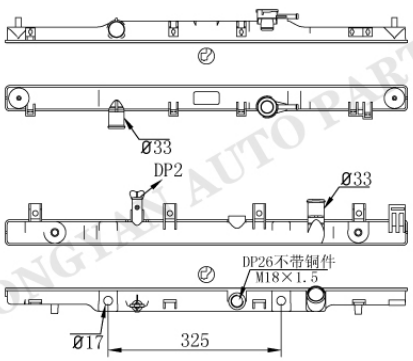

HO-0044-1AT/MT

Tank size :(R9×4×5×48×755)
OEM :19010PPAA51/PNB003
DPI :2443 2444
NISSENS :68103
APPLICATION :
02-06 HONDA CR-V 2.4L

HONGTAN AUTO PARTS

HONDA/ACURA

HO-0045

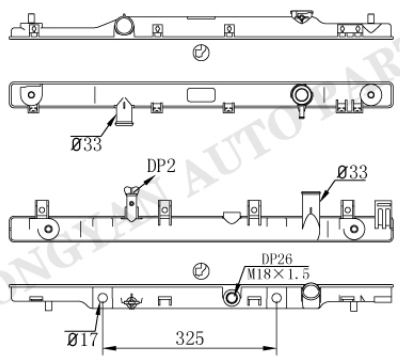

HO-0046AT/MT

Tank size :(R9×4×5×48×717)
OEM :19010PNAH51/G51/901
DPI :2573
NISSENS :
APPLICATION :
01-03 HONDA STREAM 2.0L

HO-0047

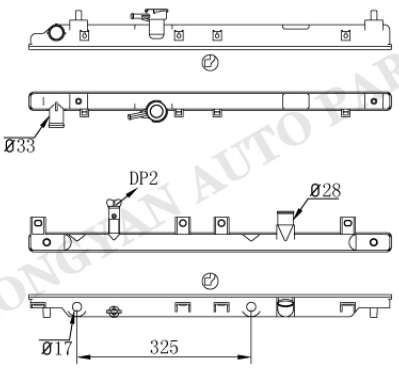

HO-0048AT/MT

Tank size :(R9×4.5×5×34.5/39.5×675.5)
OEM :19010REJW51/01
DPI :
NISSENS :
APPLICATION :
03- HONDA FIT 1.6L

HO-0047

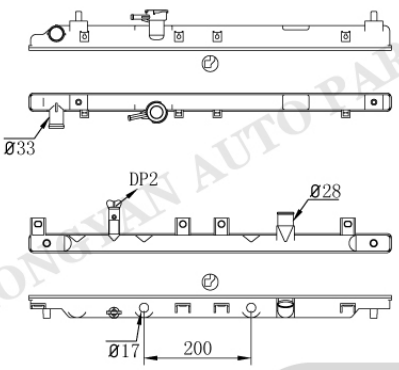

HO-0048-1AT

Tank size :(R9×4.5×5×34.5/39.5×675.5)
OEM :19010REJW51/01
DPI :
NISSENS :
APPLICATION :
03- HONDA FIT 1.6L

HO-0049

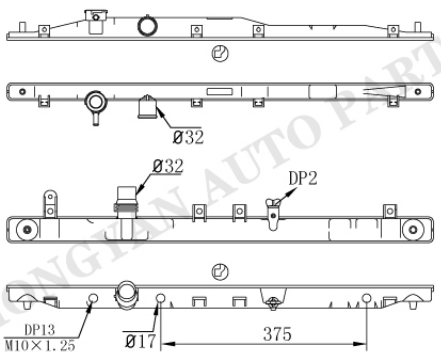

HO-0050AT/MT

Tank size :(R9×4.5×5×33/48×794)
OEM :19010PT0209
DPI :
NISSENS :
APPLICATION :
05-10 HONDA ODYSSEY

HONGYAN AUTO PARTS

HONDA/ACURA

HO-0049

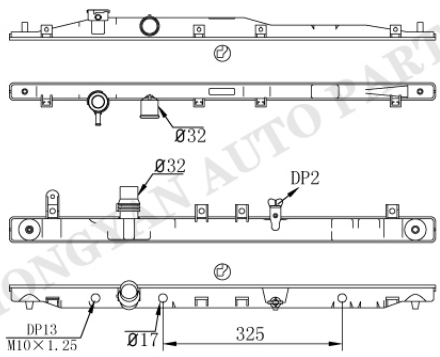

HO-0050-1AT

Tank size :(R9×4.5×5×33/48×794)
OEM :19010PT0209
DPI :
NISSENS :
APPLICATION :
05-10 HONDA ODYSSEY

HO-0051

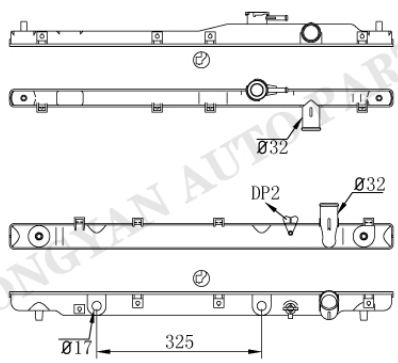

HO-0052AT/MT

Tank size :(R9×4×5×33/48×717)
OEM :
DPI :
NISSENS :
APPLICATION :

HO-0053

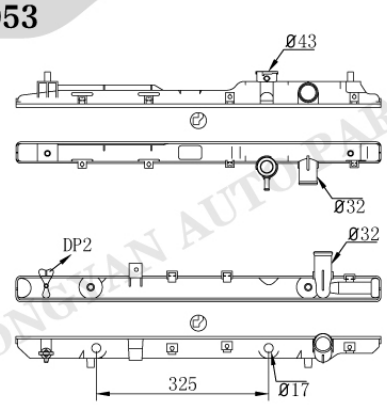

HO-0054AT/MT

Tank size :(R9.5×4×6×40/48×684)
OEM :19010P3F901
DPI :2051
NISSENS :
APPLICATION :
97-01 HONDA CR-V 2.0L

HO-0055

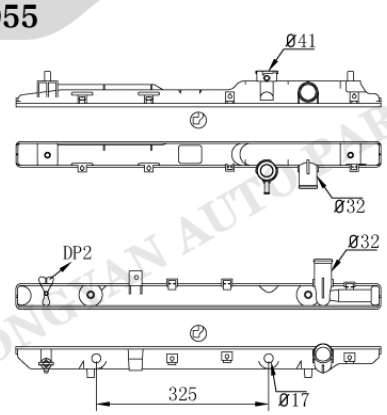

HO-0054AT/MT

Tank size :(R9.5×4×6×48×684)
OEM :
DPI :
NISSENS :
APPLICATION :
97-01 HONDA CR-V 2.0L

HONGYAN AUTO PARTS

HONDA/ACURA

HO-0056

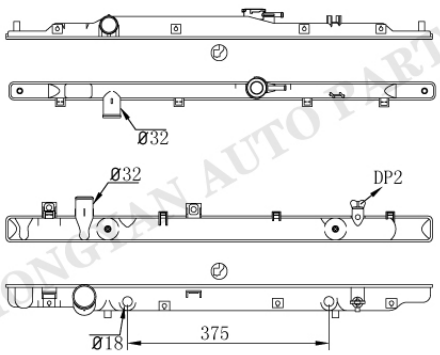

HO-0057AT/MT

Tank size :(R9×4×5×33/48×794)
OEM :19010P8FA51
DPI :2270
NISSENS :
APPLICATION :
99-04 HONDA ODYSSEY 3.5L

HO-0056

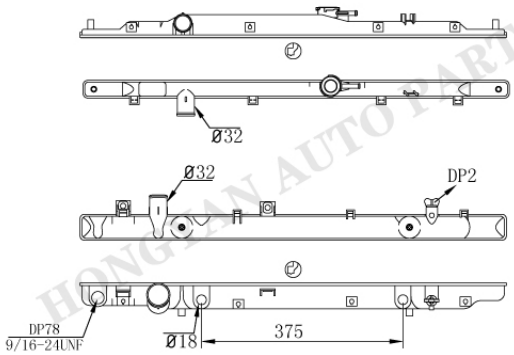

HO-0057-1AT/MT

Tank size :(R9×4×5×33/48×794)
OEM :19010PHGKA51
DPI :2417
NISSENS :
APPLICATION :
01-02 ACURA MDX 3.5L
03-04 HONDA PILOT 3.5L

HO-0058

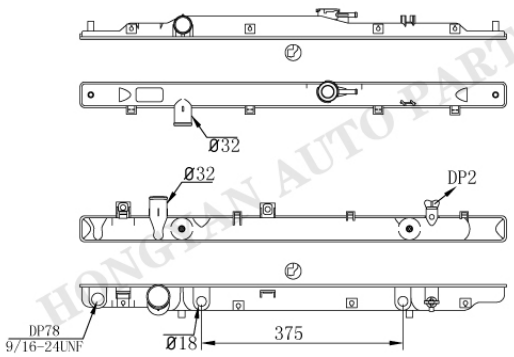

HO-0057-1AT/MT

Tank size :(R9×4×5×48×794)
OEM :19010RDJA51
DPI :2740
NISSENS :
APPLICATION :
03-06 ACURA MDX 3.5L
05- HONDA PILOT 3.5L

HO-0059

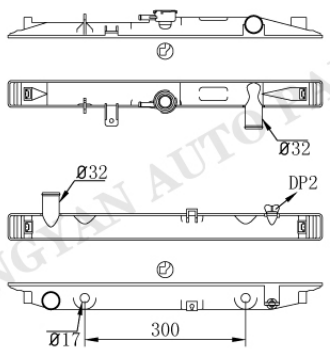

HO-0060AT/MT

Tank size :(R8×5×5×50×586)
OEM :949384433
DPI :1446
NISSENS :
APPLICATION :
94-96 HONDA PASSPORT 2.6
90-92 ISUZU PICHUP 2.6L

HONGTAN AUTO PARTS

HONDA/ACURA

HO-0061

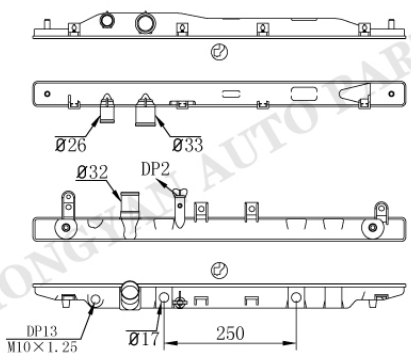

HO-0062AT/MT

Tank size :(R8.5×4×5×48×699.8)
OEM :19010RNBC51
DPI :2922 2923
NISSENS :
APPLICATION :
06-10 ACURA CSX 2.0L
06-11 HONDA CIVIC 1.8L

HO-0061

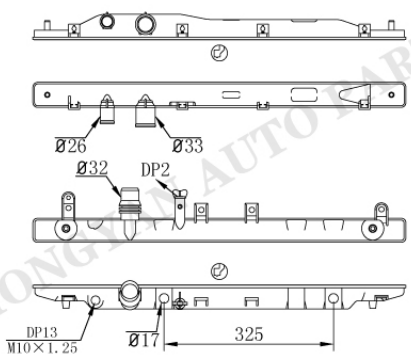

HO-0062-1AT

Tank size :(R8.5×4×5×48×699.8)
OEM :
DPI :
NISSENS :
APPLICATION :
06-10 ACURA CSX 2.0L
06-11 HONDA CIVIC 1.8L

HO-0061

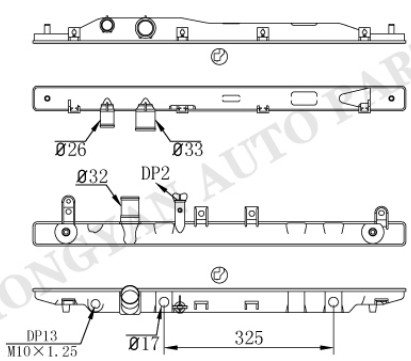

HO-0063AT/MT

Tank size :(R8.5×4×5×48×699.8)
OEM :
DPI :
NISSENS :
APPLICATION :
06-10 ACURA CSX 2.0L
06-11 HONDA CIVIC 1.8L

HO-0064

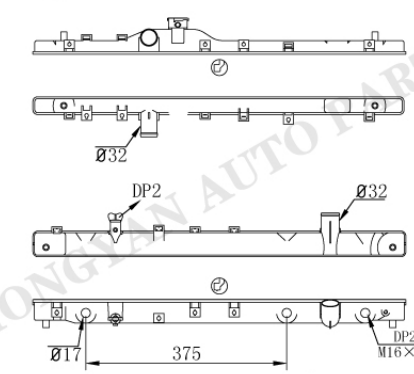

HO-0014AT/MT

Tank size :(R8.5×4×5×33/48×697.8)
OEM :
DPI :2031
NISSENS :
APPLICATION :
96-98 ACURA TL 3.2L

HO-11

HO-0065

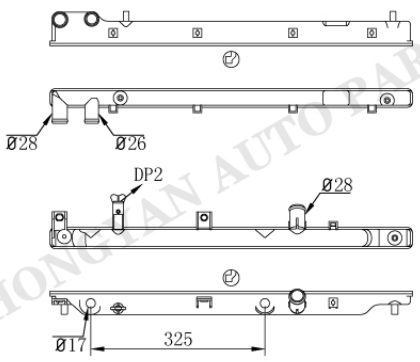

HO-0066AT/MT

Tank size :(R9×4.5×5×34.5/39.5×675.5)
OEM :
DPI :
NISSENS :
APPLICATION :
07-08 HONDA FIT 1.5L

HO-0065

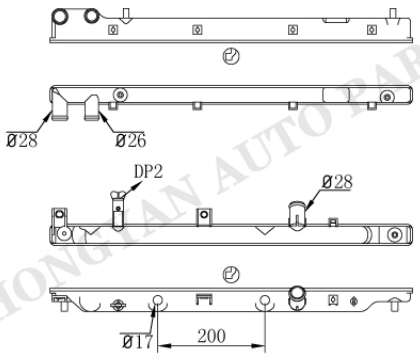

HO-0066-1AT/MT

Tank size :(R9×4.5×5×34.5/39.5×675.5)
OEM :19010RMNW51/01
DPI :2955
NISSENS :
APPLICATION :
07-08 HONDA FIT 1.5L

HO-0067

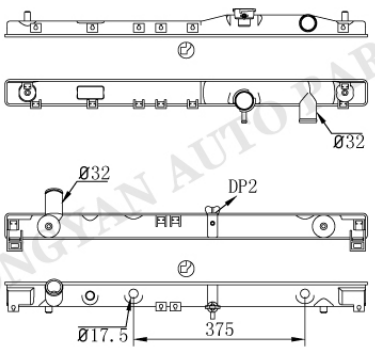

HO-0068AT/MT

Tank size :(R9.5×5×5×50×687.3)
OEM :19010PV0903
DPI :1277
NISSENS :
APPLICATION :
92-94 ACURA VIGOR 2.5L

HO-0069

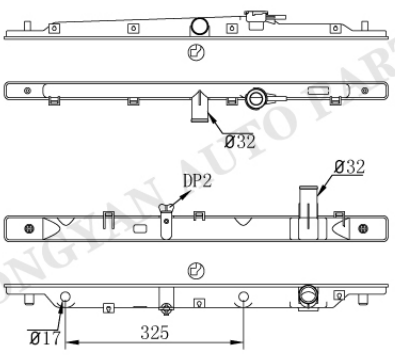

HO-0070AT/MT

Tank size :(R9×5×5×33/47×713)
OEM :19010P14A11
DPI :1572 1979 1611
NISSENS :
APPLICATION :
92-6 HONDA PRELUDE 2.3L

HONDA/ACURA

HO-0071

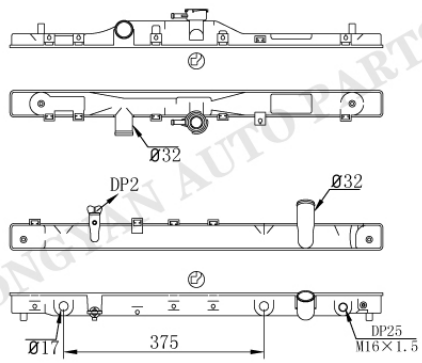

HO-0072AT/MT

Tank size :(R8×5×5×50×698)
OEM :19010PH4A01
DPI :1278 1951
NISSENS :
APPLICATION :
91-95 ACURA LEGEND 3.2L

HO-0073

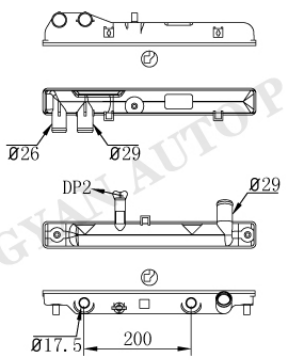

HO-0074AT/MT

Tank size :(R9×4.5×5×50×399.5)
OEM :19010PWAG01
DPI :
NISSENS :
APPLICATION :

HO-0075

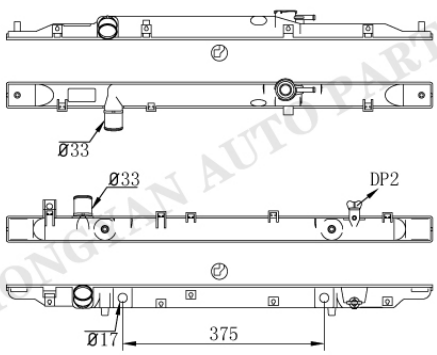

HO-0076AT/MT

Tank size :(R4.5×5×4.5×48×792)
OEM :19010RGLA51
DPI :2806
NISSENS :
APPLICATION :
05-10 HONDA ODYSSEY 3.5L

HO-0075

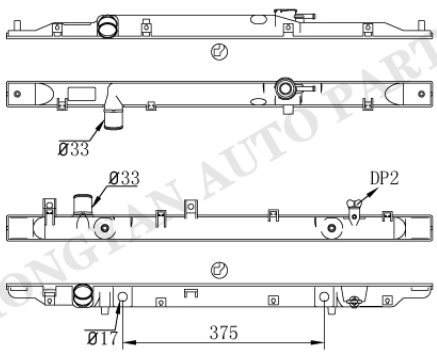

HO-0076-1AT/MT

Tank size :(R4.5×5×4.5×48×792)
OEM :
DPI :
NISSENS :
APPLICATION :
05-10 HONDA ODYSSEY 3.5L

HO-13

HO-0077

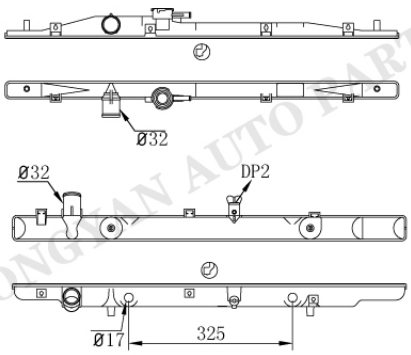

HO-0078AT/MT

Tank size :(R9×5×5×33/48×736)
OEM :
DPI :
NISSENS :
APPLICATION :
03-07 HONDA ACCORD 3.0L

HO-0079

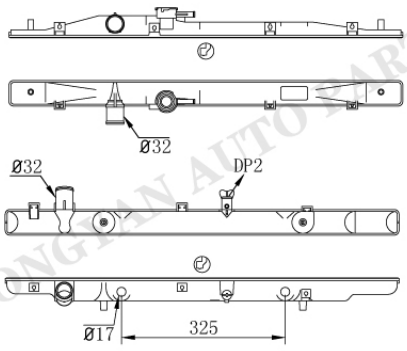

HO-0078AT/MT

Tank size :(R9×4×5×48×736)
OEM :19010RCAA52
DPI :2571 2773
NISSENS :
APPLICATION :
03-07 HONDA ACCORD 3.0L

HO-0080

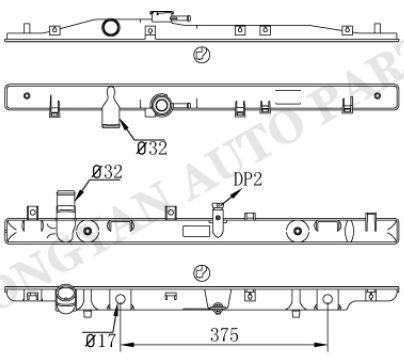

HO-0081AT/MT

Tank size :(R9×4×5×48×736)
OEM :19010RJAJ52
DPI :2838
NISSENS :
APPLICATION :
05-08 ACURA RL 3.5L

HO-0082

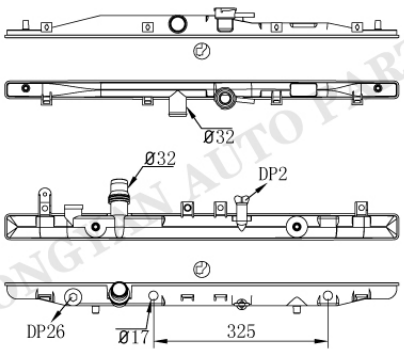

HO-0083AT/MT

Tank size :(R9×4×5×33/48×736)
OEM :19010RBBE01/A51/E51
DPI :2680 2966
NISSENS :
APPLICATION :
04-05 ACURA TSX 2.4L

HONGTIAN AUTO PARTS

HONDA/ACURA

HO-0084

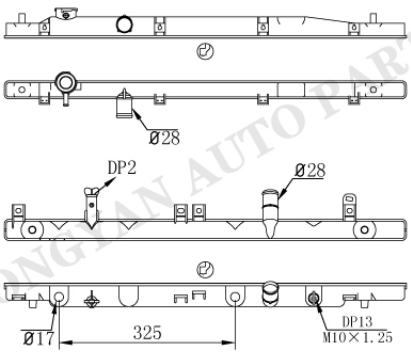

HO-0085AT/MT

Tank size :(R8×4×5×33/40×755)
OEM :
DPI :
NISSENS :
APPLICATION :
09-12 HONDA FIT 1.5L

HO-0086

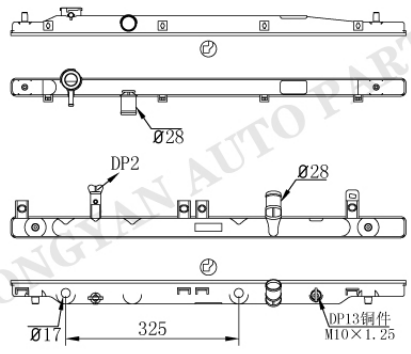

HO-0087AT/MT

Tank size :(R10×4×5×34/40×742)
OEM :19010RB1J51
DPI :13068
NISSENS :
APPLICATION :
09-13 HONDA FIT 1.5L

HO-0086

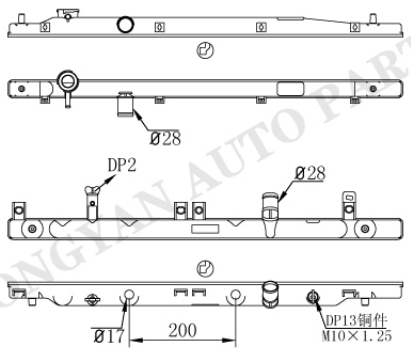

HO-0087-1AT

Tank size :(R10×4×5×34/40×742)
OEM :
DPI :
NISSENS :
APPLICATION :
09-13 HONDA FIT 1.5L

HO-0088

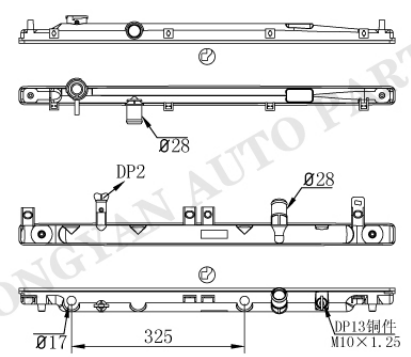

HO-0089AT/MT

Tank size :(R10×4×5×34/40×706)
OEM :
DPI :
NISSENS :
APPLICATION :
09-13 HONDA FIT 1.5L

HONGTIAN AUTO PARTS

HONDA/ACURA

HO-0088

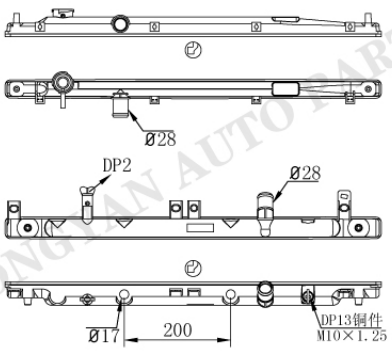

HO-0089-1AT

Tank size :(R10×4×5×34/40×706)
OEM :
DPI :
NISSENS :
APPLICATION :
09-13 HONDA FIT 1.5L

HO-0090

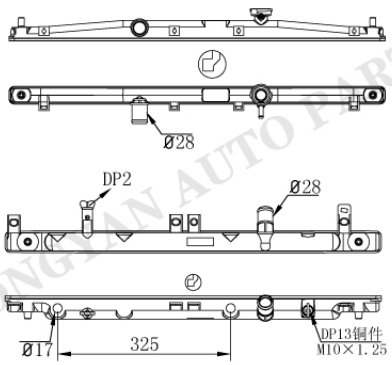

HO-0089AT/MT

Tank size :(R9×4.5×5×34/40×706.5)
OEM :
DPI :13105
NISSENS :
APPLICATION :
10-15 HONDA CRZ 1.5L
10-15 HONDA INSIGHT 1.3L

HO-0091

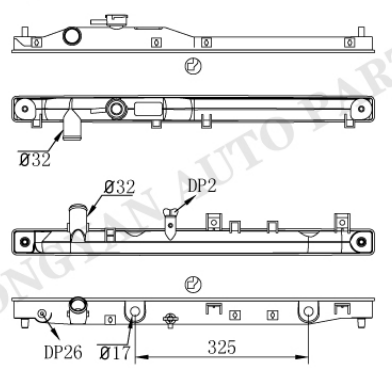

HO-0092AT/MT

Tank size :(R9×4×5×48×678.3)
OEM :19010PCX003/13
DPI :2344
NISSENS :
APPLICATION :
00-09 HONDA S2000 2.0/2.2L

HO-0093

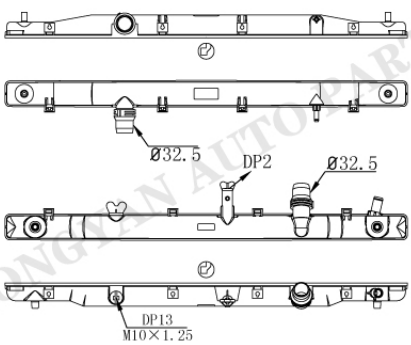

HO-0094

Tank size :(R9×4×5×48×755)
OEM :19010R06E01
DPI :
NISSENS :68092
APPLICATION :
06- HONDA CR-V 2.2L

HONDA/ACURA

HO-0095

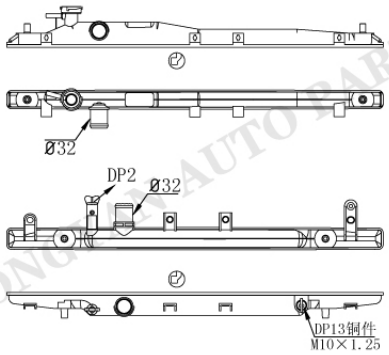

HO-0096

Tank size :(R9×4.5×5×34/40×706.5)
OEM :
DPI :
NISSENS :
APPLICATION :
08-11 HONDA CITY

HO-0097

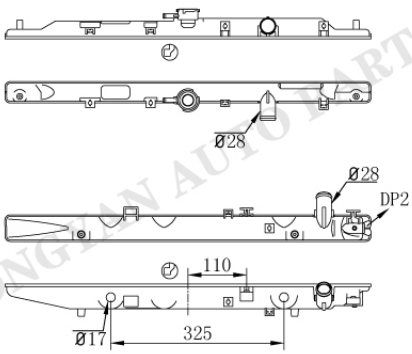

HO-0098AT/MT

Tank size :(R9.5×4.5×5×40/50×687)
OEM :
DPI :
NISSENS :
APPLICATION :
88-91 HONDA CRX 1.5/1.6L
88-91 HONDA CIVIC 1.5/1.6L

HO-0099

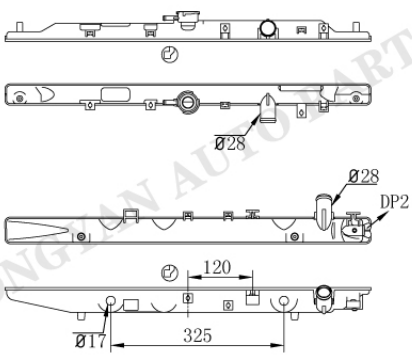

HO-0100AT/MT

Tank size :(R9.5×4.5×5×40/50×687)
OEM :1900401PM8A02
DPI :886
NISSENS :
APPLICATION :
88-91 HONDA CRX 1.5/1.6L
88-91 HONDA CIVIC 1.5/1.6L

HO-0099

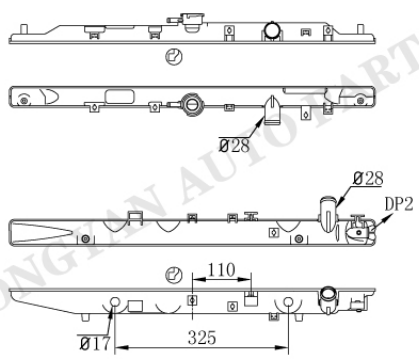

HO-0100-1AT/MT

Tank size :(R9.5×4.5×5×40/50×687)
OEM :
DPI :
NISSENS :
APPLICATION :
88-91 HONDA CRX 1.5/1.6L
88-91 HONDA CIVIC 1.5/1.6L

HO-17

HONDA/ACURA

HO-0099

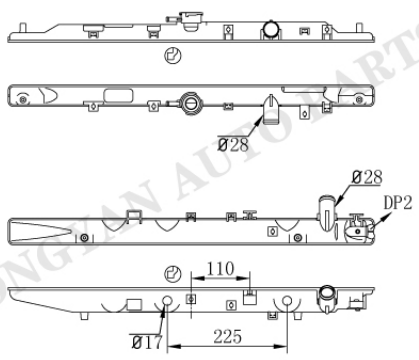

HO-0100-2AT

Tank size :(R9.5×4.5×5×40/50×687)
OEM :
DPI :
NISSENS :
APPLICATION :
88-91 HONDA CRX 1.5/1.6L
88-91 HONDA CIVIC 1.5/1.6L

HO-0101

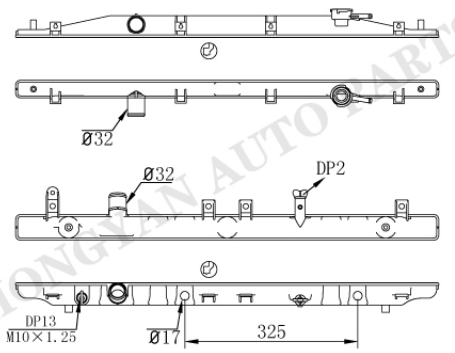

HO-0102AT/MT

Tank size :(R9×4×5×33/48×794)
OEM :19010R40A52/70A51
DPI :2990
NISSENS :
APPLICATION :
08-12 HONDA ACCORD 2.4L
12-15 HONDA CROSSTOUR 2.4L

HO-0101

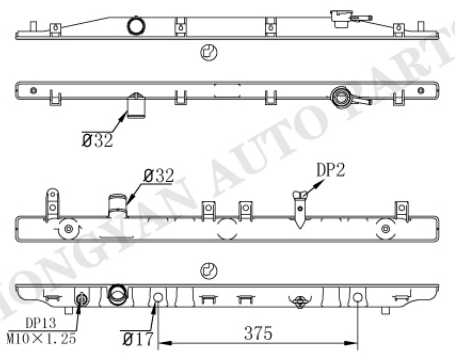

HO-0102-1AT

Tank size :(R9×4×5×33/48×794)
OEM :
DPI :
NISSENS :
APPLICATION :
08-12 HONDA ACCORD 2.4L
12-15 HONDA CROSSTOUR 2.4L

HO-0101

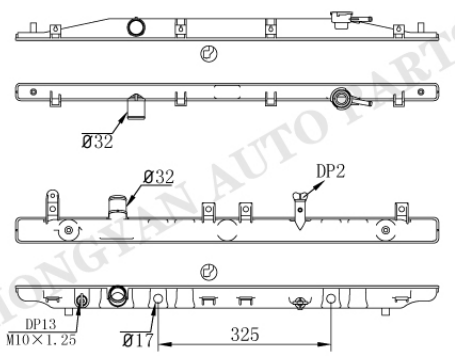

HO-0102-2AT

Tank size :(R9×4×5×33/48×794)
OEM :
DPI :
NISSENS :
APPLICATION :
08-12 HONDA ACCORD 2.4L
12-15 HONDA CROSSTOUR 2.4L

HONGYAN AUTO PARTS

HONDA/ACURA

HO-0103

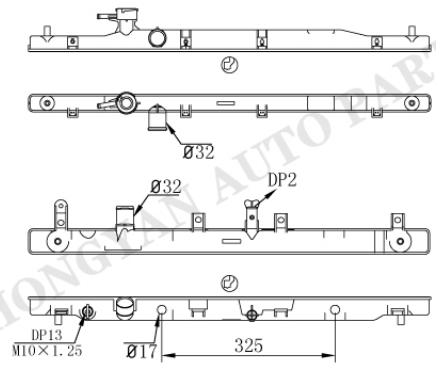

HO-0104AT/MT

Tank size :(R9×4×5×33/48×755)
OEM :19010RZAA51
DPI :2954 13161
NISSENS :
APPLICATION :
07-09 HONDA CR-V 2.4L

HO-0103

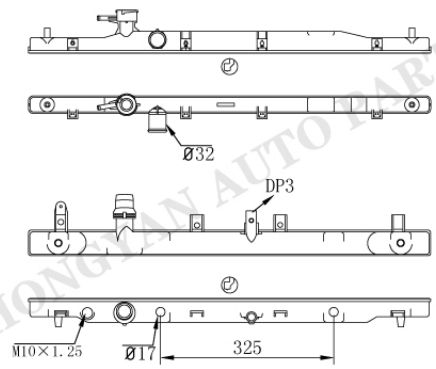

HO-0105AT/MT

Tank size :(R9×4×5×33/48×755)
OEM :19010RZAA51
DPI :13031 13155
NISSENS :
APPLICATION :
07-09 HONDA CR-V 2.4L

HO-0106

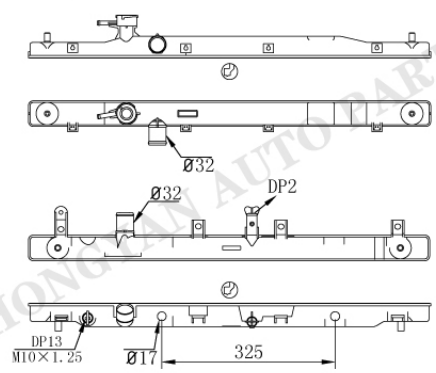

HO-0104AT/MT

Tank size :(R9×4×5×48×755)
OEM :19010RZAA51
DPI :
NISSENS :
APPLICATION :
07-09 HONDA CR-V 2.4L

HO-0107

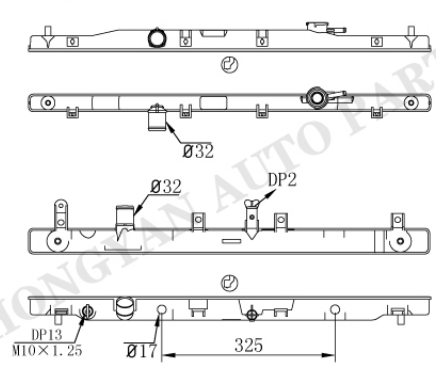

HO-0104AT/MT

Tank size :(R9×4×5×33/48×755)
OEM :
DPI :13314
NISSENS :
APPLICATION :
12-14 HONDA CR-V 2.4L

HONGTAN AUTO PARTS

HONDA/ACURA

HO-0108

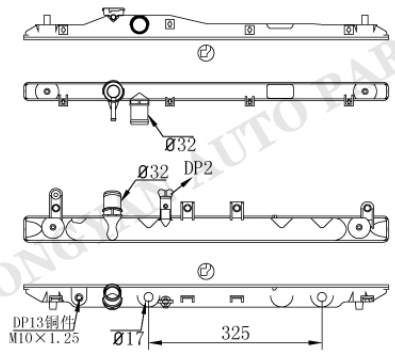

HO-0109AT/MT

Tank size :(R9.5×4.5×5×34.5/49.5×684.5)
OEM :
DPI :13257
NISSENS :
APPLICATION :
13-14 ACURA ILX 1.5L
12-13 HONDA CIVIC 1.8L

HO-0108

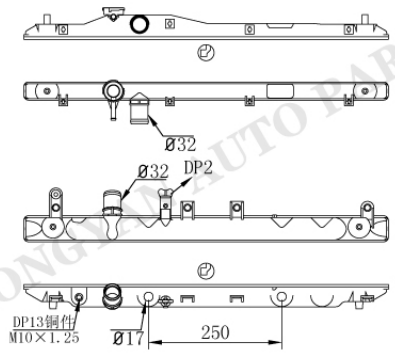

HO-0109-1AT

Tank size :(R9.5×4.5×5×34.5/49.5×684.5)
OEM :
DPI :
NISSENS :
APPLICATION :
13-14 ACURA ILX 1.5L
12-13 HONDA CIVIC 1.8L

HO-0108

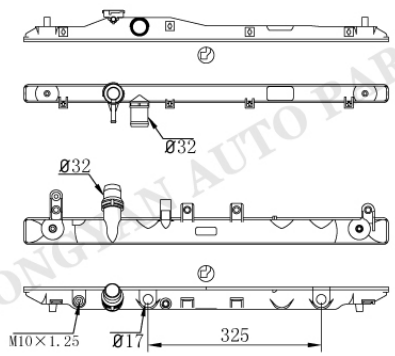

HO-0110AT/MT

Tank size :(R9.5×4.5×5×34.5/49.5×684.5)
OEM :
DPI :13221
NISSENS :
APPLICATION :
13-14 ACURA ILX 2.0/2.4L
12-13 HONDA CIVIC 1.8L

HO-0111

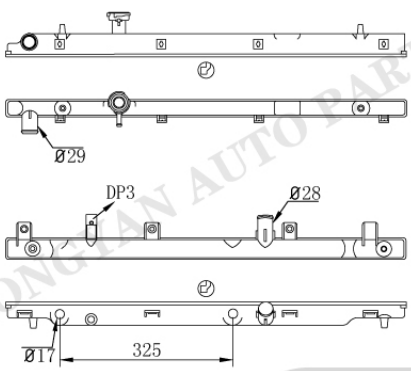

HO-0112AT/MT

Tank size :(R9.5×4.5×5×32.5/40×752)
OEM :19010PYD902/J51
DPI :
NISSENS :
APPLICATION :
01-03 HONDA MOBILIO

HONGTAN AUTO PARTS

HONDA/ACURA

HO-0113

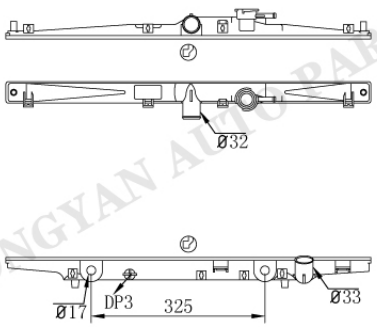

HO-0114AT/MT

Tank size :(R8.8×4×6×39.3/49.3×683)
OEM :
DPI :
NISSENS :
APPLICATION :

HO-0011

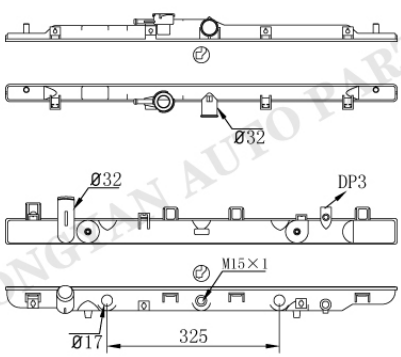

HO-0115AT/MT

Tank size :(R8.5×4×5×33/48×736)
OEM :
DPI :
NISSENS :
APPLICATION :

HO-0011

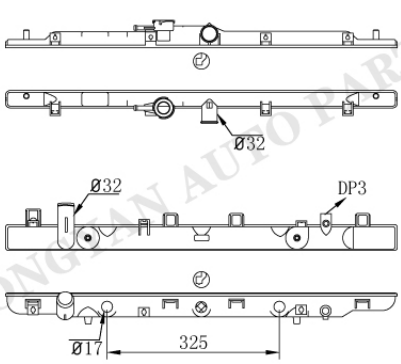

HO-0116AT/MT

Tank size :(R8.5×4×5×33/48×736)
OEM :
DPI :2431
NISSENS :
APPLICATION :
02-03 ACURA CL 3.2L
02-03 ACURA TL 3.2L

HO-0117

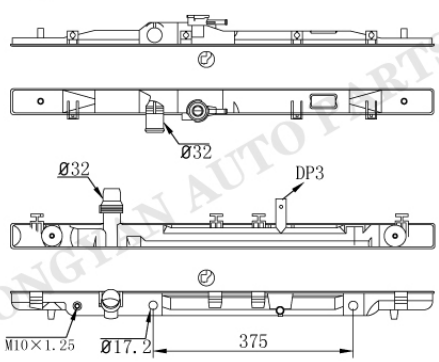

HO-0118AT/MT

Tank size :(R9×4×5×47.8×794)
OEM :
DPI :2916
NISSENS :
APPLICATION :
07-12 ACURA RDX 2.3L

HO-21

HONGYAN AUTO PARTS

HONDA/ACURA

HO-0119

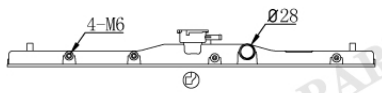

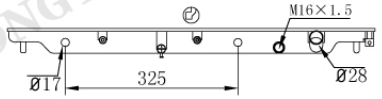

HO-0120AT/MT

Tank size :(R9×5×5×50×687.3)
OEM :19010PH1621
DPI :928
NISSENS :
APPLICATION :
86-89 HONDA ACCORD 2.0L

HO-0121

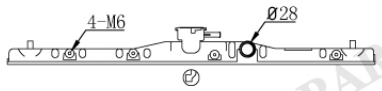

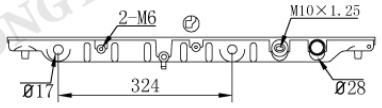

HO-0122AT/MT

Tank size :(R9×5×5×50×687.3)
OEM :
DPI :
NISSENS :
APPLICATION :
86-89 HONDA ACCORD 2.0L

HO-0123

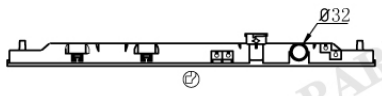

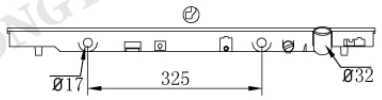

HO-0124AT/MT

Tank size :(R9×5×5×40/50×687.3)
OEM :19010P72013/091 19010P72003
DPI :1741 1568
NISSENS :
APPLICATION :
94-01 ACURA INTEGRA 1.8L

HO-0080

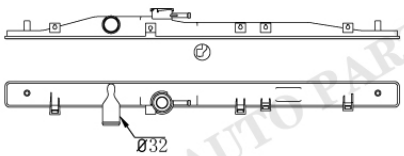

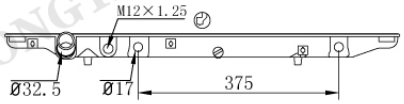

HO-0125AT/MT

Tank size :(R9×4×5×48×736)
OEM :
DPI :2939
NISSENS :
APPLICATION :
07-08 ACURA TL 3.2/3.5L

HONGYAN AUTO PARTS

HONDA/ACURA

HO-0080

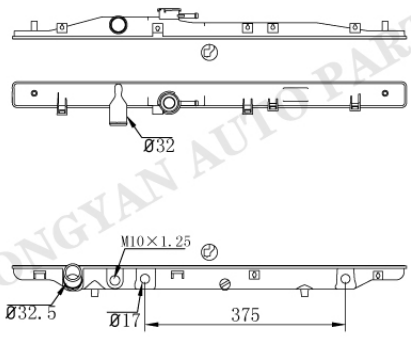

HO-0126AT/MT

Tank size :(R9×4×5×48×736)
OEM :
DPI :13081
NISSENS :
APPLICATION :
09-12 ACURA RL 3.7L

HO-0043

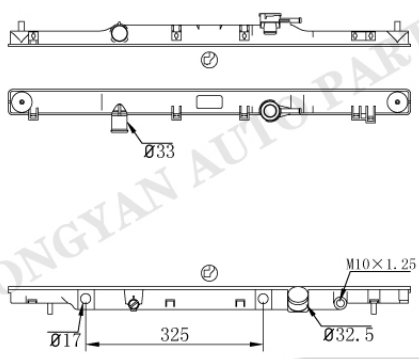

HO-0127AT/MT

Tank size :(R9×4×5×48×755)
OEM :
DPI :13015
NISSENS :
APPLICATION :
07-11 HONDA ELEMENT 2.4L

HO-0075

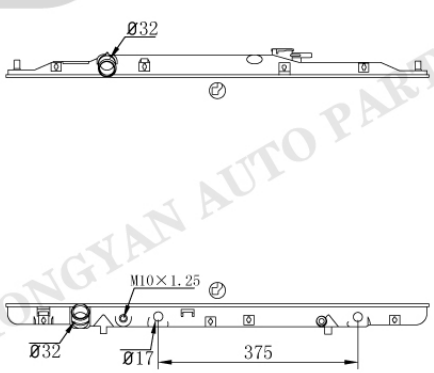

HO-0129AT/MT

Tank size :(R9×5×5.2×48×794)
OEM :
DPI :2938
NISSENS :
APPLICATION :
07-13 ACURA MDX 3.7L

HO-0075

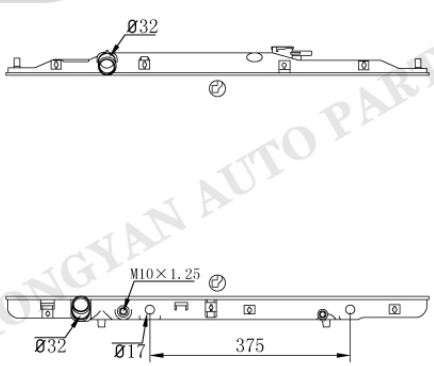

HO-0130AT/MT

Tank size :(R9×5×5.2×48×794)
OEM :
DPI :13065
NISSENS :
APPLICATION :
09-14 HONDA PILOT 3.5L
09-14 HONDA RIDGELINE 3.5L

HONGYAN AUTO PARTS

HONDA/ACURA

HO-0131

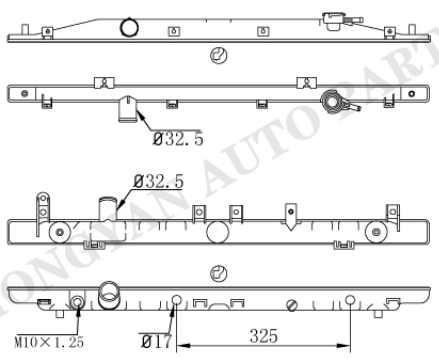

HO-0132AT/MT

Tank size :(R8×5×4.5×33/48×794)
OEM :
DPI :13082
NISSENS :
APPLICATION :
09-14 ACURA TSX 2.4/3.5L

HO-0133

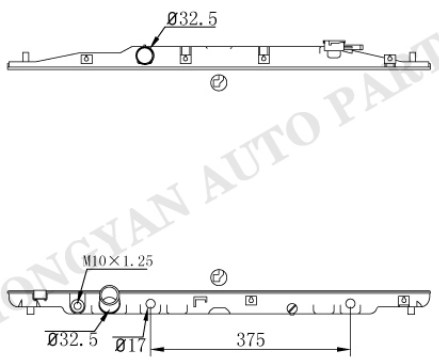

HO-0134AT/MT

Tank size :(R8×5.5×5×48×794)
OEM :
DPI :13179 13121
NISSENS :
APPLICATION :
09-11 ACURA TL 3.5L

HO-0133

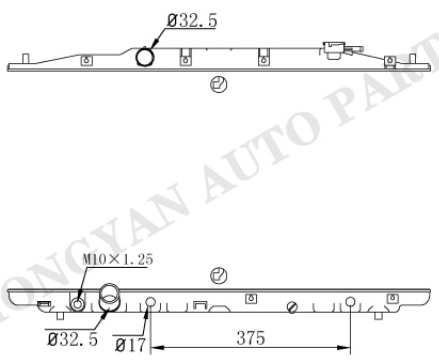

HO-0135AT/MT

Tank size :(R8×5.5×5×48×794)
OEM :
DPI :2989
NISSENS :
APPLICATION :
13-14 ACURA RDX 3.5L
08-12 HONDA ACCORD 3.5L
12-15 HONDA CROSSTOUR 3.5L

HO-0136

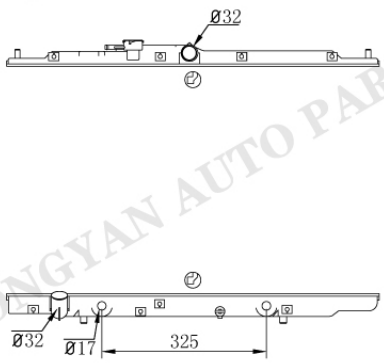

HO-0137AT/MT

Tank size :(R9×4×5×33/48×699.8)
OEM :
DPI :1776
NISSENS :
APPLICATION :
97-98 ACURA CL 3.0L
95-97 HONDA ACCORD 2.7L

HONGYAN AUTO PARTS

HONDA/ACURA

HO-0138

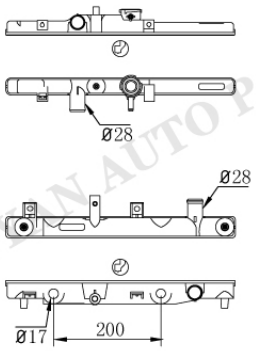

HO-0139AT/MT

Tank size :(R9×4×5×33/40×428)
OEM :19010PHM003/901
DPI :2745
NISSENS :
APPLICATION :
00-06 HONDA INSIGHT 1.0L ELECTRIC/GAS

HO-0140

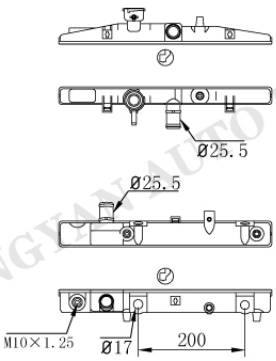

HO-0141AT/MT

Tank size :(R8.5×4×4.5×33/48×400)
OEM :
DPI :
NISSENS :
APPLICATION :

HO-0142

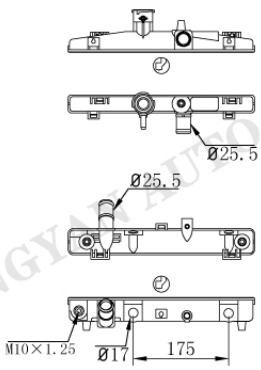

HO-0143AT/MT

Tank size :(R8.5×4×4.5×33/48×342)
OEM :
DPI :
NISSENS :
APPLICATION :

HO-0144

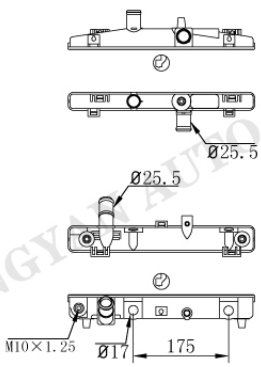

HO-0143AT/MT

Tank size :(R8.5×4×4.5×33/48×342)
OEM :
DPI :
NISSENS :
APPLICATION :

HONGYAN AUTO PARTS

HONDA/ACURA

HO-0145

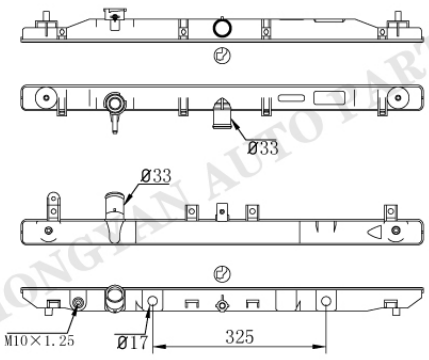

HO-0146AT/MT

Tank size :(R9×4×4.5×48×755.8)
OEM :
DPI :
NISSENS :
APPLICATION :

HO-0147

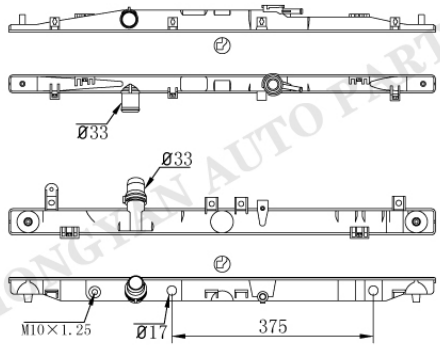

HO-0148AT/MT

Tank size :(R8.5×4×4.5×33/48×793.5)
OEM :
DPI :
NISSENS :
APPLICATION :

HO-0147

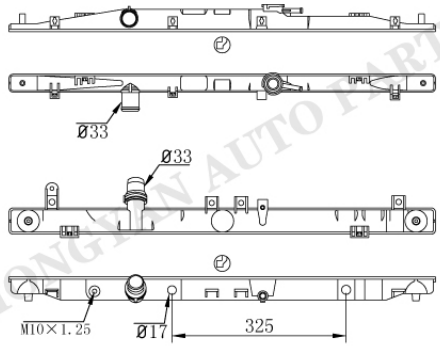

HO-0149AT/MT

Tank size :(R8.5×4×4.5×33/48×793.5)
OEM :
DPI :
NISSENS :
APPLICATION :

HO-0147

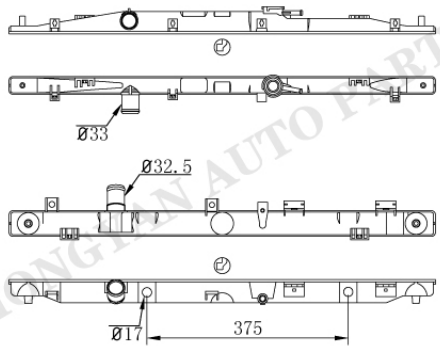

HO-0150AT/MT

Tank size :(R8.5×4×4.5×33/48×793.5)
OEM :
DPI :
NISSENS :
APPLICATION :

HONGYAN AUTO PARTS

HONDA/ACURA

HO-0151

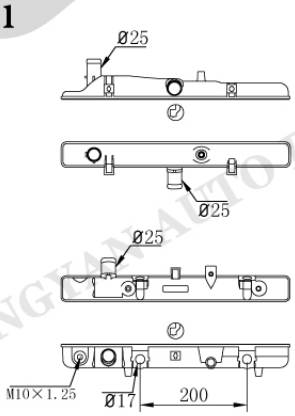

HO-0152AT/MT

Tank size :(R9×4×4.5×48×428)
OEM :19010R20003/R21003
DPI :
NISSENS :
APPLICATION :

HO-0151

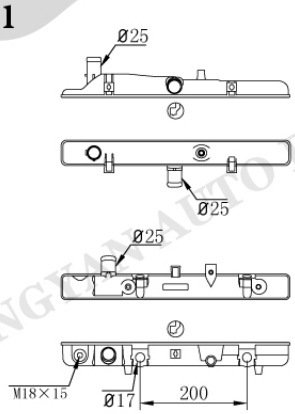

HO-0153AT/MT

Tank size :(R9×4×4.5×48×428)
OEM :19010R20901/R21901
DPI :
NISSENS :
APPLICATION :

HO-0154

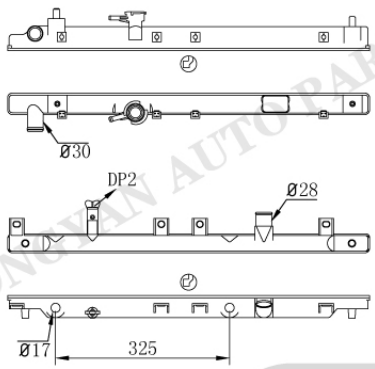

HO-0048AT/MT

Tank size :(R9×4.5×5×39.5×675.5)
OEM :
DPI :
NISSENS :
APPLICATION :

HO-0155

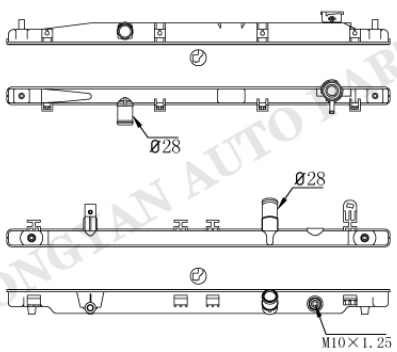

HO-0156

Tank size :(R8.5×4×5×33×717)
OEM :
DPI :
NISSENS :
APPLICATION :
12- HONDA BRIO
12- HONDA JADE

HONGYAN AUTO PARTS

HO-27

HONDA/ACURA

HO-0157

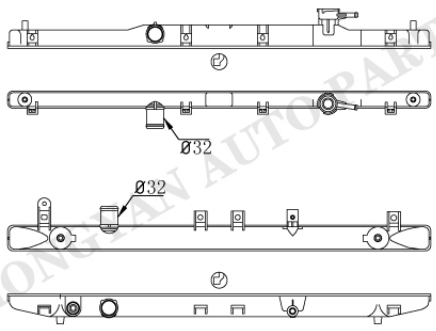

HO-0158

Tank size :(R8.5×4×5×33/48×794)
OEM :
DPI :13363
NISSENS :
APPLICATION :
13-15 HONDA ACCARD 2.4L

HO-0159

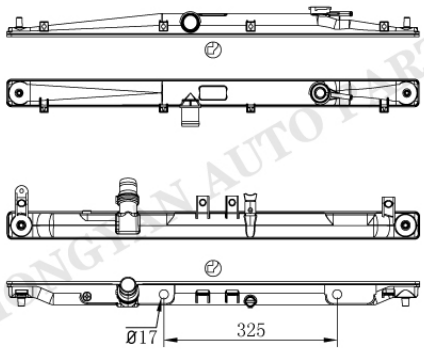

HO-0160AT/MT

Tank size :(R8×4.5×5×49.5×774)
OEM :
DPI :
NISSENS :
APPLICATION :
10- HONDA ODYSSEY

HO-0161

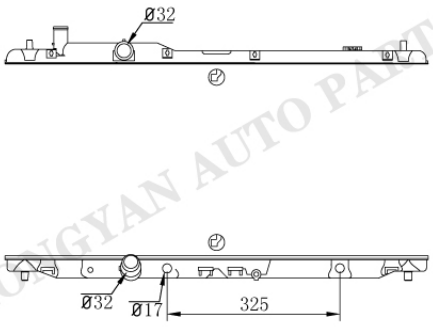

HO-0162AT/MT

Tank size :(R9.5×4.2×4.5×33/48×794)
OEM :
DPI :
NISSENS :
APPLICATION :

HO-0163

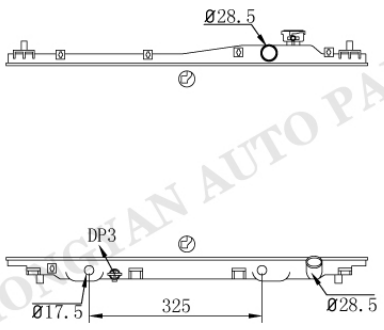

HO-0164AT/MT

Tank size :(R9×4.2×5×47.8×679)
OEM :
DPI :
NISSENS :
APPLICATION :

HONGYAN AUTO PARTS

HONDA/ACURA

HO-0165

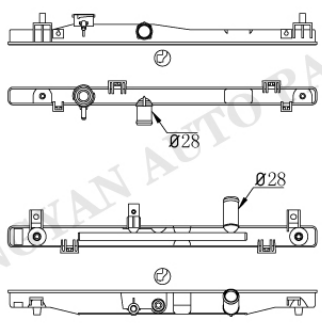

Tank size :(R9×4×4.5×33/40×579.5)
OEM :
DPI :
NISSENS :
APPLICATION :
14- HONDA VEZEL 1.5L

HO-0166

HO-0167

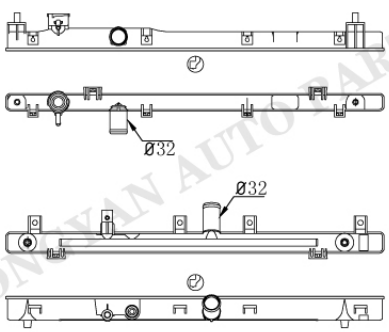

Tank size :(R9×4×4.5×33/40×713.5)
OEM :
DPI :
NISSENS :
APPLICATION :
14- HONDA VEZEL 1.8L

HO-0168

HO-0169

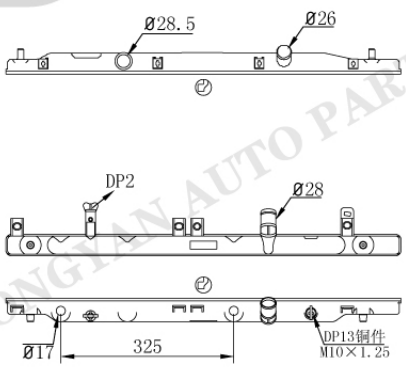

Tank size :(R10×4×5×34/40×742)
OEM :
DPI :
NISSENS :
APPLICATION :
HONDA FIT

HO-0087AT/MT

HO-0170

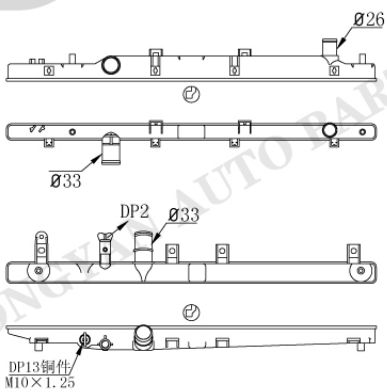

Tank size :(R9.5×4×5×31/40×695)
OEM :
DPI :
NISSENS :
APPLICATION :
14- HONDA VEZEL

HO-0171

HO-29

HONGYAN AUTO PARTS

HONDA/ACURA

HO-0172

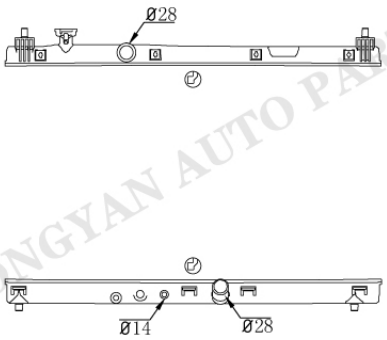

HO-0173

Tank size :(R9.5×4.5×5×34.5/39.5×706)
OEM :
DPI :
NISSENS :
APPLICATION :

HO-0172

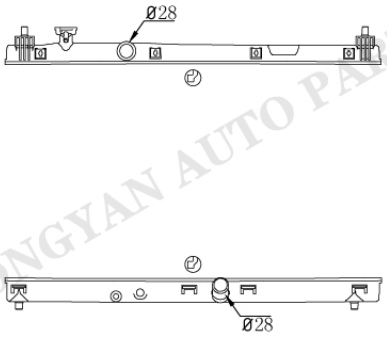

HO-0174

Tank size :(R9.5×4.5×5×34.5/39.5×706)
OEM :
DPI :
NISSENS :
APPLICATION :

HO-0175

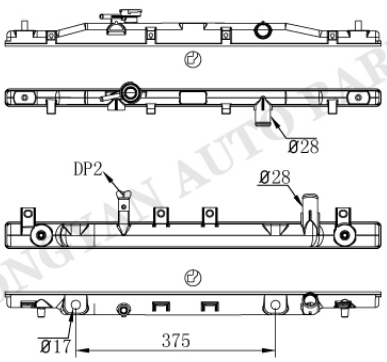

HO-0176AT/MT

Tank size :(R9×4.5×5×33/50×706)
OEM :1910RJH901
DPI :
NISSENS :
APPLICATION :
04- HONDA EDIX/FR-V

HO-0177

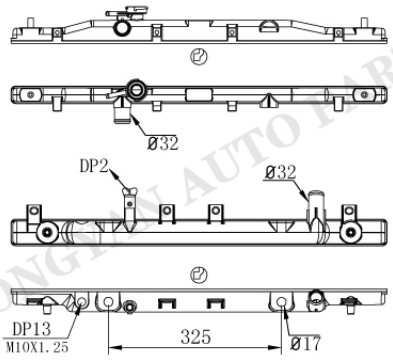

HO-0178AT/MT

Tank size :(R9×4.5×5×33/50×706)
OEM :1910RJJ901
DPI :
NISSENS :
APPLICATION :
04- HONDA EDIX/FR-V

HONGYAN AUTO PARTS

HONDA/ACURA

HO-0179

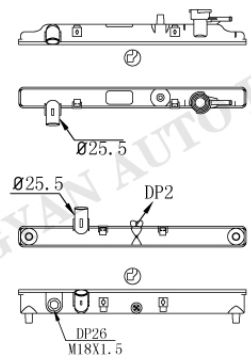

HO-0180

Tank size :(R9.5×4.5×5.2×39×427)
OEM :
DPI :
NISSENS :
APPLICATION :
HONDA

HO-0179

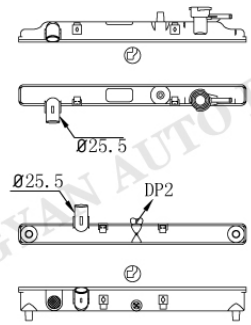

HO-0181

Tank size :(R9.5×4.5×5.2×39×427)
OEM :
DPI :
NISSENS :
APPLICATION :
HONDA

HO-0182

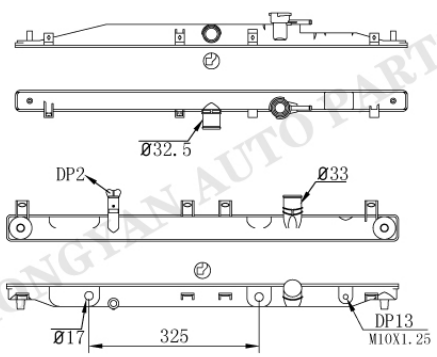

HO-0183AT/MT

Tank size :(R9×5×4.5×32/49.5×736)
OEM :
DPI :
NISSENS :
APPLICATION :
HONDA STEP WAGON

HO-0182

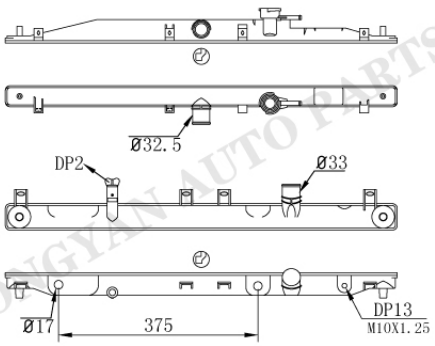

HO-0183-1AT

Tank size :(R9×5×4.5×32/49.5×736)
OEM :
DPI :
NISSENS :
APPLICATION :
HONDA STEP WAGON

HONGYAN AUTO PARTS

HONDA/ACURA

HO-0184

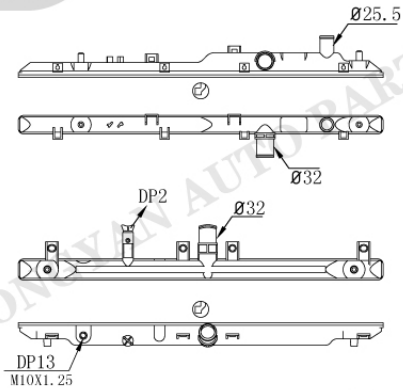

HO-0185

Tank size :(R10×4.5×5×34.5/39×685)
OEM :
DPI :
NISSENS :
APPLICATION :
HONDA

HO-0184

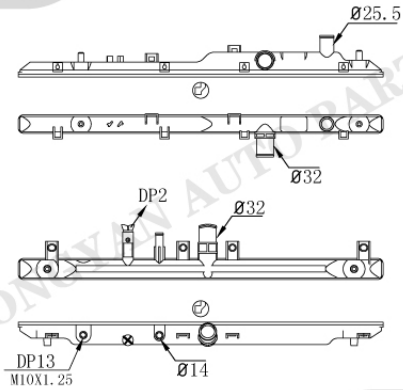

HO-0186

Tank size :(R10×4.5×5×34.5/39×685)
OEM :
DPI :
NISSENS :
APPLICATION :
HONDA

HO-0187

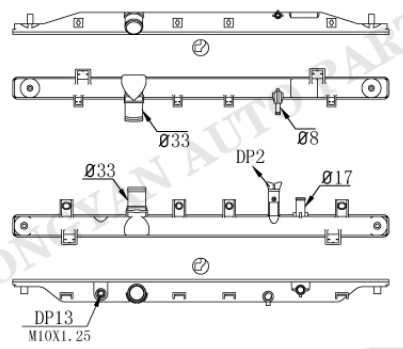

HO-0188

Tank size :(R9.5×4.5×5×41.5×706)
OEM :
DPI :
NISSENS :
APPLICATION :
HONDA

HO-0189

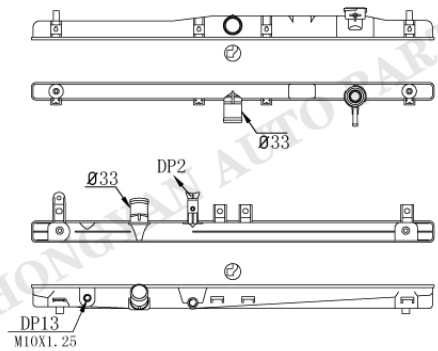

HO-0190

Tank size :(R9×4×5×33/40×756)
OEM :
DPI :
NISSENS :
APPLICATION :
HONDA

HONGYAN AUTO PARTS

HONDA/ACURA

HO-0191

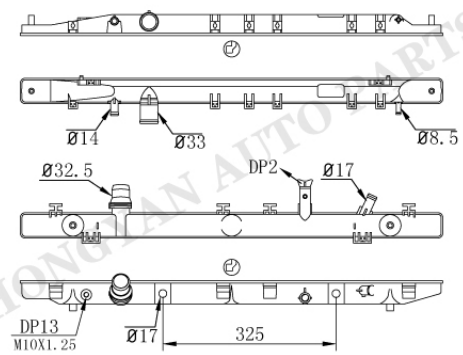

HO-0192AT/MT

Tank size :(R9×4×5×48×794)
OEM :
DPI :
NISSENS :68137
APPLICATION :
08- HONDA ACCORD 2.2L(DIESEL)

HO-0193

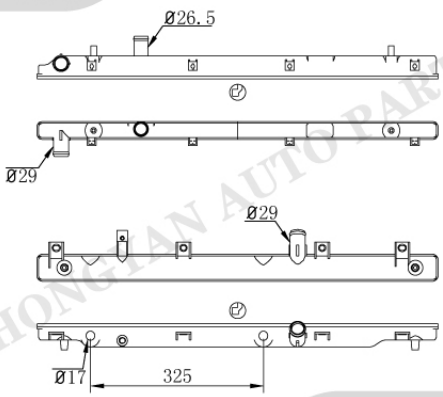

HO-0194AT/MT

Tank size :(R9×4.5×5×33/50×753)
OEM :19010RFA901
DPI :
NISSENS :
APPLICATION :
HONDA MOBILIO SPIKE

HO-0193

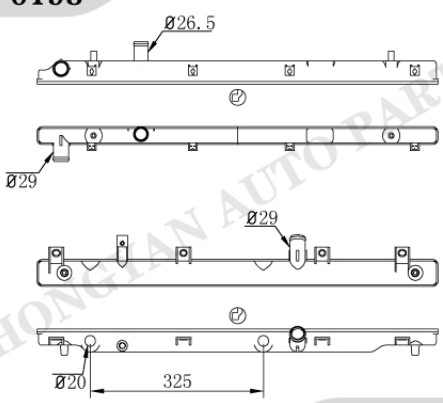

HO-0194-1AT

Tank size :(R9×4.5×5×33/50×753)
OEM :
DPI :
NISSENS :
APPLICATION :

HO-0195

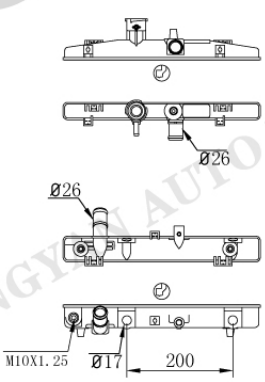

HO-0196AT/MT

Tank size :(R8.5×4×4.5×33/48×371)
OEM :
DPI :
NISSENS :
APPLICATION :

HO-33

HONDA/ACURA

HO-0197

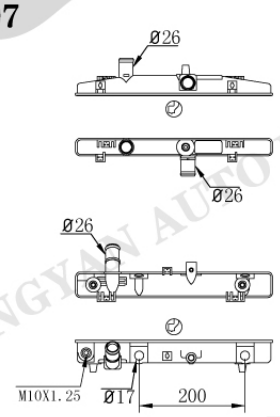

HO-0198AT/MT

Tank size :(R8.5×4×4.5×33/48×371)
OEM :
DPI :
NISSENS :
APPLICATION :

HO-0199

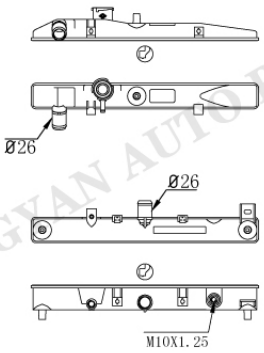

HO-0200

Tank size :(R8.5×4×4.5×48×428)
OEM :
DPI :
NISSENS :
APPLICATION :

HO-0170

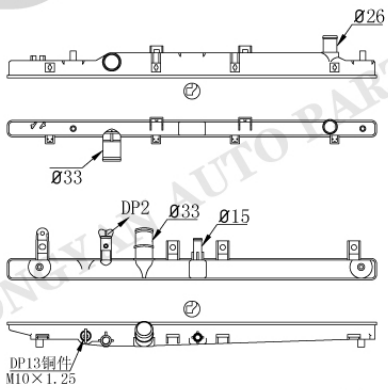

HO-0201

Tank size :(R9.5×4×5×31/40×695)
OEM :
DPI :
NISSENS :
APPLICATION :
14- HONDA VEZEL

HO-0165

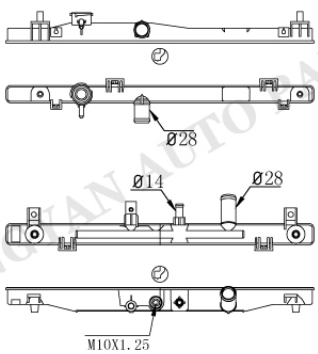

HO-0202

Tank size :(R9×4×4.5×33/40×579.5)
OEM :
DPI :
NISSENS :
APPLICATION :
HONDA VEZEL

HONGYAN AUTO PARTS

HONDA/ACURA

HO-0203

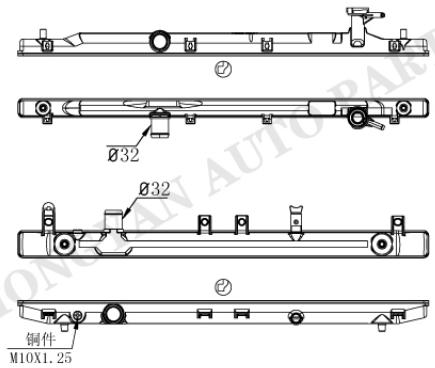

HO-0204

Tank size :(R9.5×4.5×5×35/50×773)
OEM :
DPI :
NISSENS :
APPLICATION :
15- HONDA ODYSSEY

HO-0205

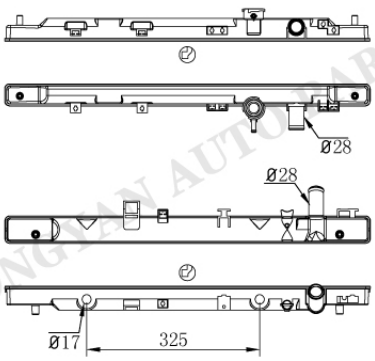

HO-0206AT/MT

Tank size :(R9×4.5×5×40/50×687)
OEM :19010P72010/091 19010P72003
DPI :1568 1741
NISSENS :
APPLICATION :
94-01 ACURA INTEGRA 1.8L

HO-0207

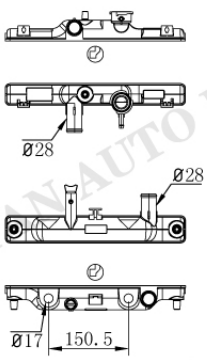

HO-0208AT/MT

Tank size :(R9×5×4.5×40/50×339)
OEM :
DPI :
NISSENS :
APPLICATION :
92-02 HONDA GA3

HO-0209

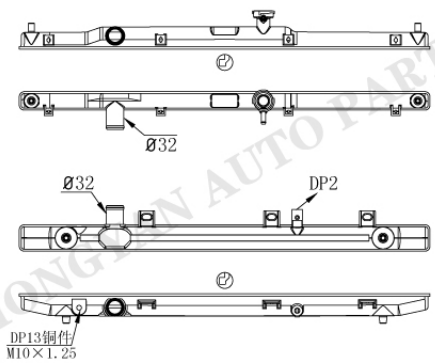

HO-0210

Tank size :(R9.5×4.5×5×34.5/49.5×772.5)
OEM :190105K0A01
DPI :13418
NISSENS :
APPLICATION :
14-15 HONDA ACCORD 2.0 E/G

HO-35

HONDA/ACURA

HO-0211

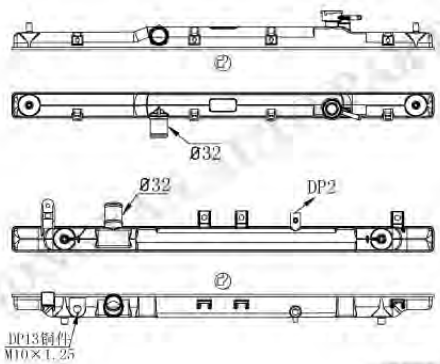

HO-0212

Tank size : (R9×4×4.5×48×794)
OEM :
DPI :13516
NISSENS :
APPLICATION :
15-16 ACURA TLX 3.5L

HO-0213

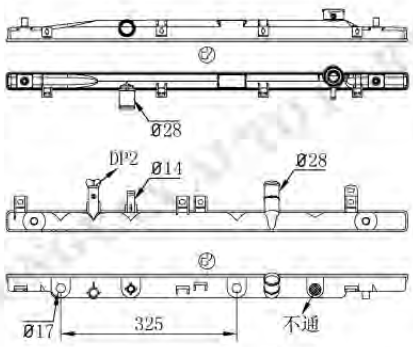

HO-0214AT/MT

Tank size :(R8×4×5×33/40×755)
OEM :
DPI :
NISSENS :
APPLICATION :
ACCORD FIT

HO-0213

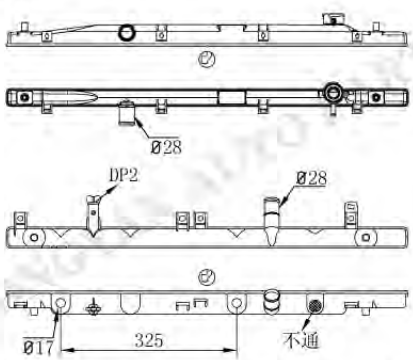

HO-0215AT/MT

Tank size :(R8×4×5×33/40×755)
OEM :
DPI :
NISSENS :
APPLICATION :
ACCORD FIT

HO-0216

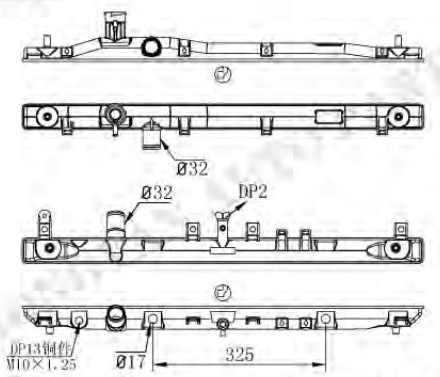

HO-0217AT/MT

Tank size :(R9×4×4.5×48×775)
OEM :19010RAOJ01
DPI :
NISSENS :
APPLICATION :
07- HONDA CROSSROAD

HONDA/ACURA

HO-0218

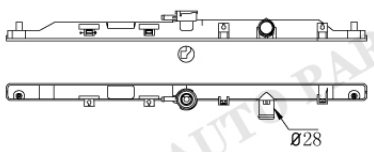

Tank size :(R8.5×4×4.5×33×678)
OEM :
DPI :
NISSENS :
APPLICATION :

HO-0220

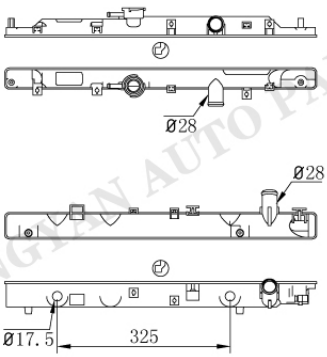

HO-0221AT/MT

Tank size :(R8×4.8×4.5×40/50×587)
OEM :19010PM3003 1910PM5405
DPI :
NISSENS :
APPLICATION :
87-92 CIVIC/CONCERTO

HO-0222

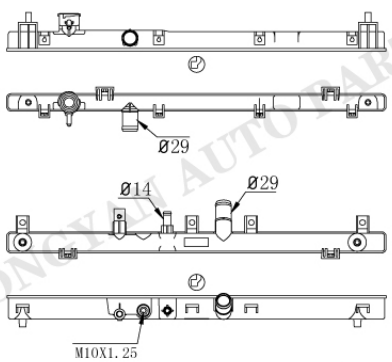

HO-0223

Tank size :(R9×4×4.5×33/40×713.5)
OEM :190105R1901
DPI :13451
NISSENS :
APPLICATION :
15-17 HONDA FIT 1.5L

HO-0222

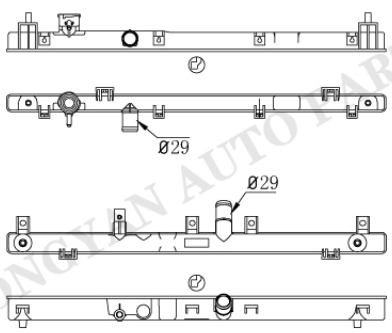

HO-0224

Tank size :(R9×4×4.5×33/40×713.5)
OEM :
DPI :
NISSENS :
APPLICATION :
15-17 HONDA FIT 1.5L

HO-37

HONGYAN AUTO PARTS

HONDA/ACURA

HO-0225

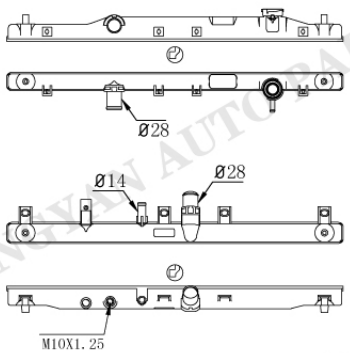

HO-0226

Tank size :(R9.5×4.5×5×34.5/39.5×632.5)
OEM :42215525
DPI :
NISSENS :
APPLICATION :
15- HONDA CITY

HO-0225

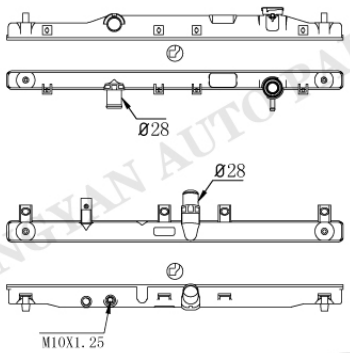

HO-0227

Tank size :(R9.5×4.5×5×34.5/39.5×632.5)
OEM :
DPI :
NISSENS :
APPLICATION :
15- HONDA CITY

HO-0225

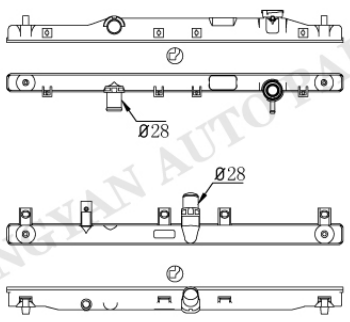

HO-0228

Tank size :(R9.5×4.5×5×34.5/39.5×632.5)
OEM :
DPI :
NISSENS :
APPLICATION :
15- HONDA CITY

HO-0229

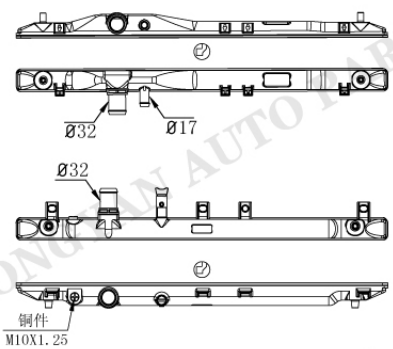

HO-0230

Tank size :(R9×4.5×5×41.5×698.5)
OEM :
DPI :
NISSENS :
APPLICATION :
16- ACCORD ILX 2.4L

HONG YAN AUTO PARTS

HONDA/ACURA

HO-0231

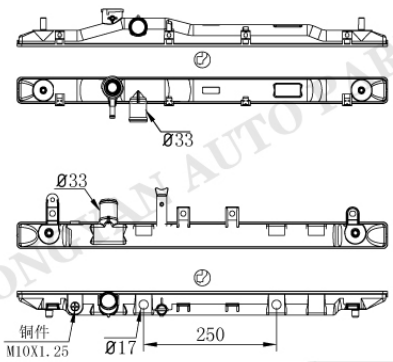

HO-0232AT/MT

Tank size :(R8.5×4×5×48×697)
OEM :19010RSAG01
DPI :
NISSENS :
APPLICATION :
11- CIVIC FAI

HO-0231

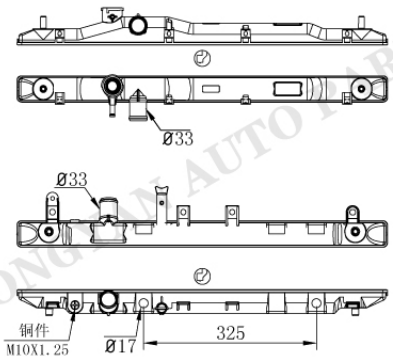

HO-0232-1AT

Tank size :(R8.5×4×5×48×697)
OEM :
DPI :
NISSENS :
APPLICATION :
11- CIVIC FAI

HO-0231

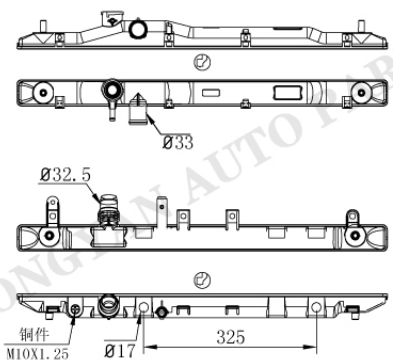

HO-0233AT/MT

Tank size :(R8.5×4×5×48×697)
OEM :
DPI :
NISSENS :
APPLICATION :
11- CIVIC FAI

HO-0123

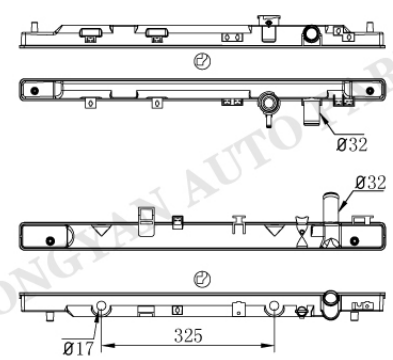

HO-0234AT/MT

Tank size :(R9×4.5×5×40/50×687)
OEM :19010P72010/091
DPI :1568 1741
NISSENS :
APPLICATION :
94-99 ACURA INTEGRA 1.8L

HO-39

HONDA/ACURA

HO-0029

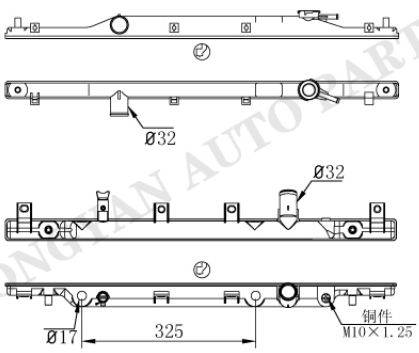

HO-0235AT/MT

Tank size :(R9×4×5×33/40×736)
OEM :
DPI :
NISSENS :
APPLICATION :
01- STEPWAGON

HO-0236

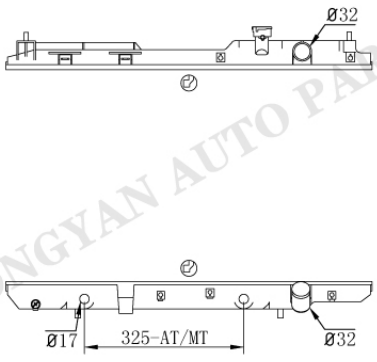

HO-0237AT/MT

Tank size :(R9.5×5×4.5×50×688.5)
OEM :19010P3F901/902 19010PF004014
DPI :2051
NISSENS :68012A 681021 68101A
APPLICATION :
97-01 HONDA CR-V 2.0L

HO-0238

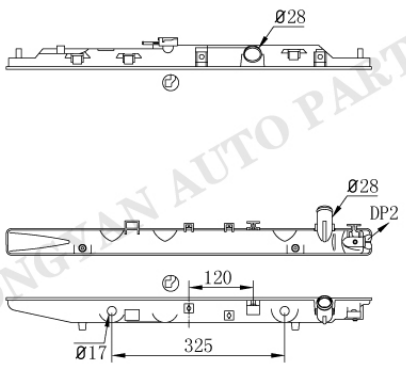

HO-0100AT/MT

Tank size :(R9.5×4.5×5×50×687)
OEM :1900401PM8A02
DPI :886
NISSENS :
APPLICATION :
88-93 HONDA CIVIC 1.5L
88-91 HONDA CRX 1.5L

HO-0239

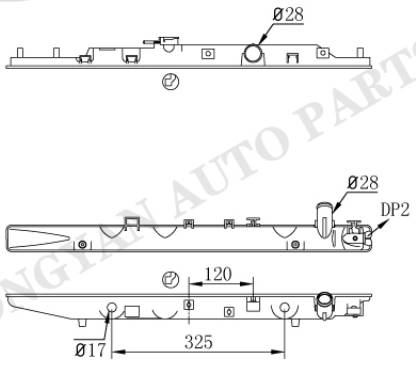

HO-0100AT/MT

Tank size :(R9.5×4.5×5×40/50×687)
OEM :
DPI :1943 10
NISSENS :
APPLICATION :
88-93 HONDA CIVIC 1.5/1.6L
88-91 HONDA CRX 1.5/1.6L

HONGYAN AUTO PARTS

HONDA/ACURA

HO-0240

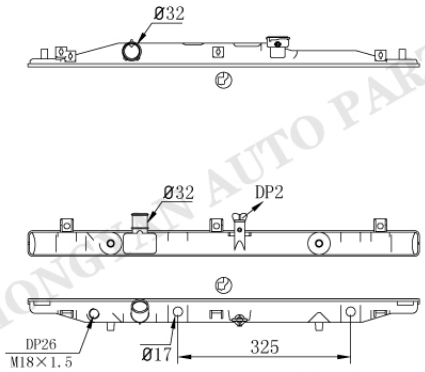

HO-0025AT/MT

Tank size :(R9×4×5×36/48×736)
OEM :19010RAAA61/A01
DPI :2569 2599 2797
NISSENS :
APPLICATION :
03-04 HONDA ACCORD 2.4L

HO-0241

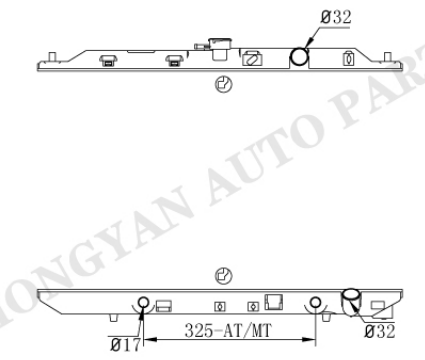

HO-0242AT/MT

Tank size :(R10×5×5×40/50×686)
OEM :
DPI :292
NISSENS :
APPLICATION :
90-93 ACURA INTEGRA 1.7/1.8L

HO-0243

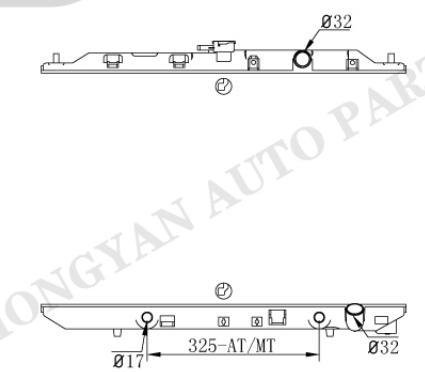

HO-0242AT/MT

Tank size :(R10×5×5×40/50×686)
OEM :
DPI :
NISSENS :
APPLICATION :
90-93 ACURA INTEGRA 1.7/1.8L

HO-0244

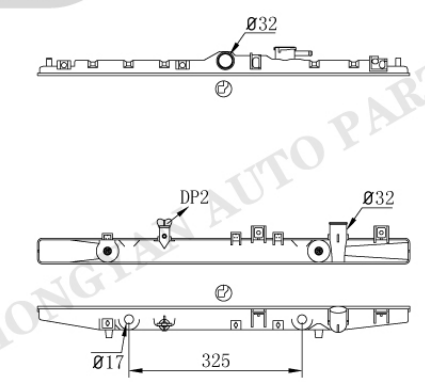

HO-0004AT/MT

Tank size :(R8.5×4×5×40/48×699.8)
OEM :19010DAAA01/PCA013/014
DPI :2148 2158 2159
NISSENS :
APPLICATION :
98-02 HONDA ACCORD 2.3L

HONGYAN AUTO PARTS

HO-0245

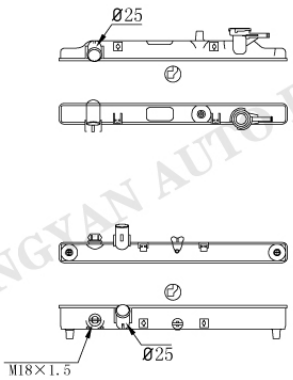

HO-0246

Tank size :(R9×4×5×48×429)
OEM :19010PEF003
DPI :
NISSENS :
APPLICATION :
99-01 HONDA ACTY/VAMOS

HO-0247

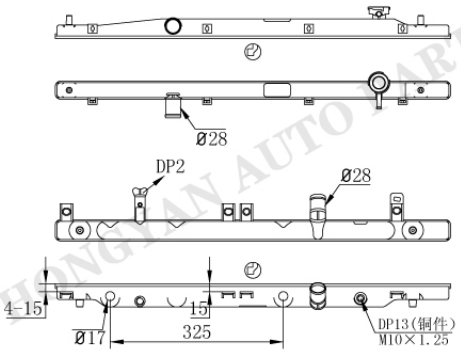

HO-0248AT/MT

Tank size :(R10×4.5×5×34.5/40×743.5)
OEM :
DPI :
NISSENS :
APPLICATION :
HONDA

Tank size :
OEM :
DPI :
NISSENS :
APPLICATION :

Tank size :
OEM :
DPI :
NISSENS :
APPLICATION :

HONGYAN AUTO PARTS

	Tank size : OEM : DPI : NISSENS : APPLICATION :
	Tank size : OEM : DPI : NISSENS : APPLICATION :
	Tank size : OEM : DPI : NISSENS : APPLICATION :
	Tank size : OEM : DPI : NISSENS : APPLICATION :

HONGYAN AUTO PARTS

	Tank size : OEM : DPI : NISSENS :
	Tank size : OEM : DPI : NISSENS :
	Tank size : OEM : DPI : NISSENS : APPLICATION :
	Tank size : OEM : DPI : NISSENS : APPLICATION :

HONGYAN AUTO PARTS

HOLDEN

HOL-0001AT/MT

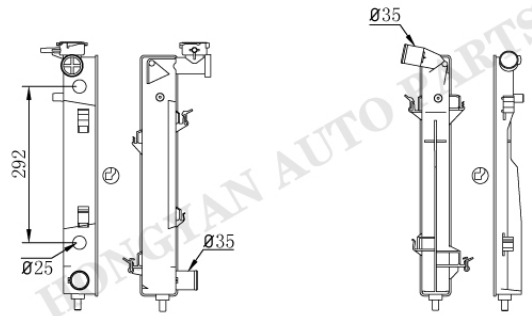

HOL-0002

Tank size :(R8.5×5×4×70/58×452)
OEM :
DPI :
NISSENS :
APPLICATION :
02-04 HOLDEN COMMODORE

HOL-0001-1AT

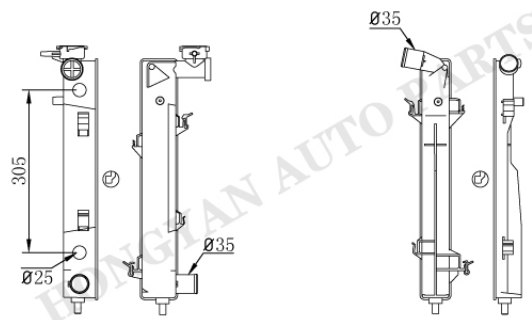

HOL-0002

Tank size :(R8.5×5×4×70/58×452)
OEM :
DPI :
NISSENS :
APPLICATION :
02-04 HOLDEN COMMODORE

HOL-0001-2AT

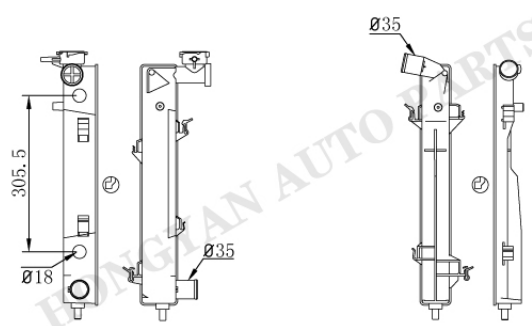

HOL-0002

Tank size :(R8.5×5×4×70/58×452)
OEM :
DPI :
NISSENS :
APPLICATION :
02-04 HOLDEN COMMODORE

HOL-0003AT/MT

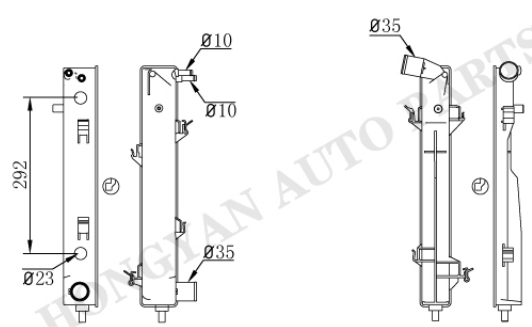

HOL-0002

Tank size :(R8.5×5×4×70/58×452)
OEM :
DPI :
NISSENS :
APPLICATION :
HOLDEN COMMODORE

HONGTAN AUTO PARTS

HOLDEN

HOL-0003-1AT

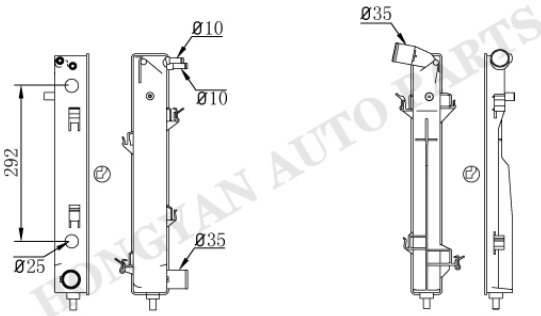

HOL-0002

Tank size :(R8.5×5×4×70/58×452)
OEM :
DPI :
NISSENS :
APPLICATION :
HOLDEN COMMODORE

HOL-0003-2AT

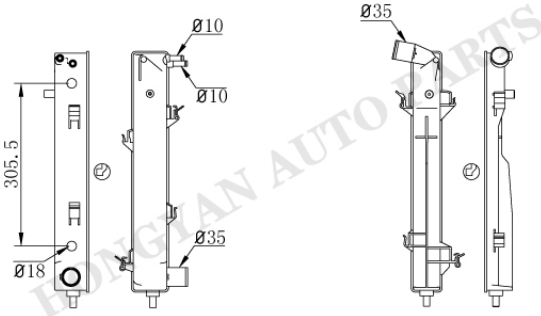

HOL-0002

Tank size :(R8.5×5×4×70/58×452)
OEM :
DPI :
NISSENS :
APPLICATION :
HOLDEN COMMODORE

HOL-0004AT/MT

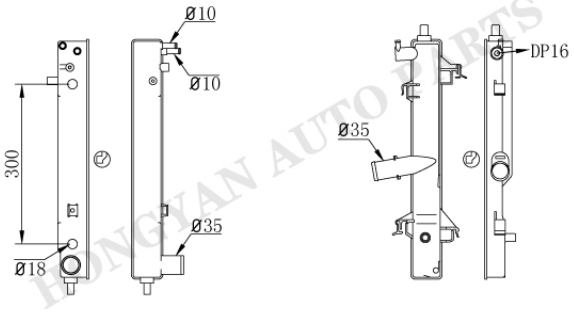

HOL-0005

Tank size :(R8.5×4×5×59×450)
OEM :
DPI :
NISSENS :
APPLICATION :
HOLDEN COMMODORE

HOL-0004-1AT

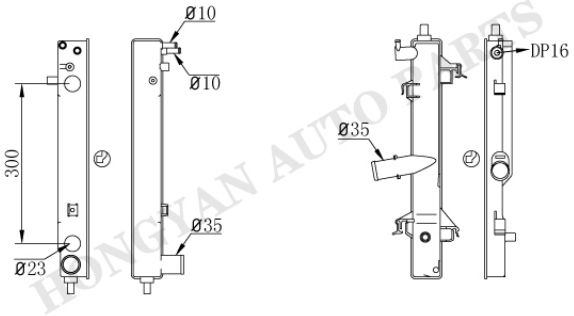

HOL-0005

Tank size :(R8.5×4×5×59×450)
OEM :
DPI :
NISSENS :
APPLICATION :
HOLDEN COMMODORE

HONGYAN AUTO PARTS

HOLDEN

HOL-0006

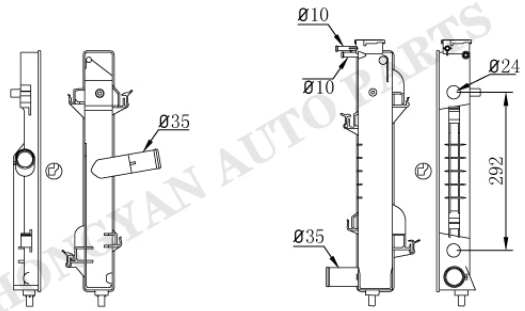

HOL-0007AT/MT

Tank size :(R8.5×5×4×58/70×452)
OEM :
DPI :
NISSENS :
APPLICATION :
05- HOLDEN COMMODORE

HOL-0006

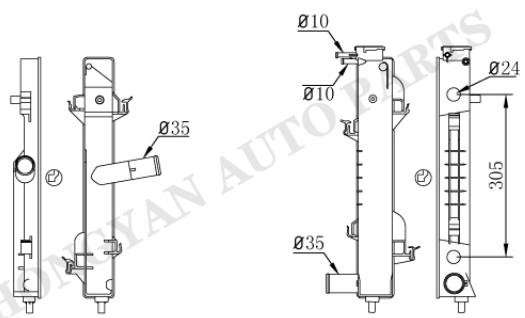

HOL-0007-1AT

Tank size :(R8.5×5×4×58/70×452)
OEM :
DPI :
NISSENS :
APPLICATION :
05- HOLDEN COMMODORE

HOL-0006

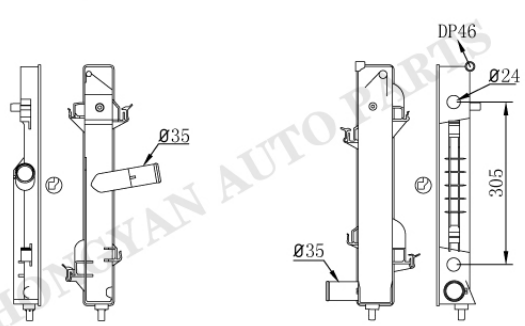

HOL-0008AT/MT

Tank size :(R8.5×5×4×58/70×452)
OEM :
DPI :
NISSENS :
APPLICATION :
05- HOLDEN COMMODORE

HOL-0006

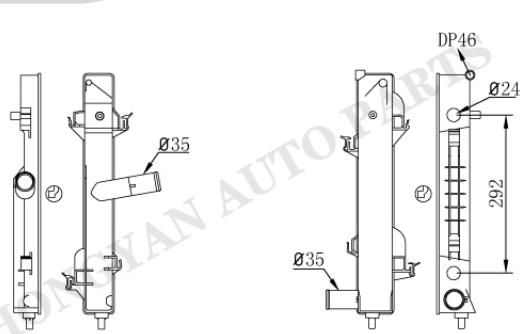

HOL-0008-1AT

Tank size :(R8.5×5×4×58/70×452)
OEM :
DPI :
NISSENS :
APPLICATION :
05- HOLDEN COMMODORE

HOLDEN

HOL-0009AT/MT

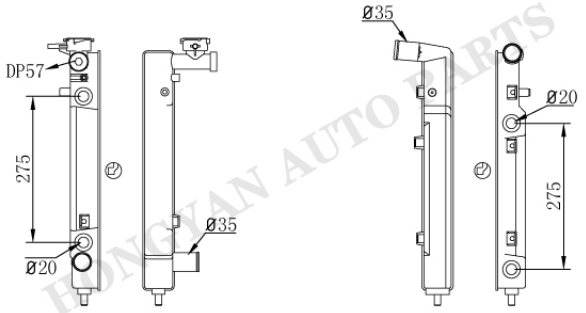

HOL-0010AT/MT

Tank size :(R8.5×4×5×59×450)
OEM :
DPI :
NISSENS :
APPLICATION :
97-00 HOLDEN COMMODORE

HOL-0011AT/MT

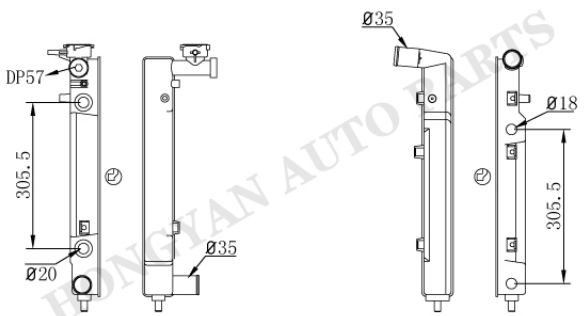

HOL-0010-1AT

Tank size :(R8.5×4×5×59×450)
OEM :
DPI :
NISSENS :
APPLICATION :
97-00 HOLDEN COMMODORE

HOL-0011-1AT

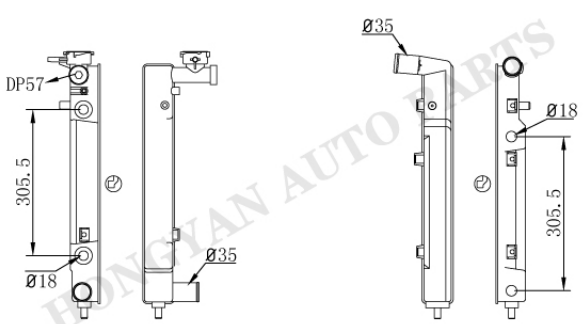

HOL-0010-1AT

Tank size :(R8.5×4×5×59×450)
OEM :
DPI :
NISSENS :
APPLICATION :
97-00 HOLDEN COMMODORE

HOL-0012AT/MT

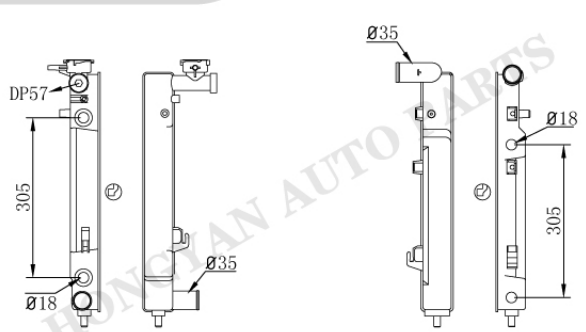

HOL-0013AT/MT

Tank size :(R8.5×4×5×59×450)
OEM :
DPI :
NISSENS :
APPLICATION :
97-00 HOLDEN COMMODORE

HONGYAN AUTO PARTS

HOLDEN

HOL-0012-1AT

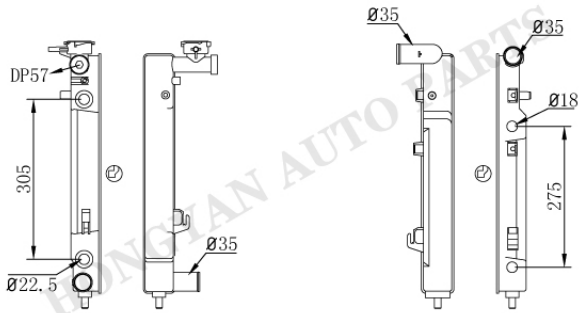

HOL-0013-1AT

Tank size :(R8.5×4×5×59×450)
OEM :
DPI :
NISSENS :
APPLICATION :
97-00 HOLDEN COMMODORE

HOL-0014AT/MT

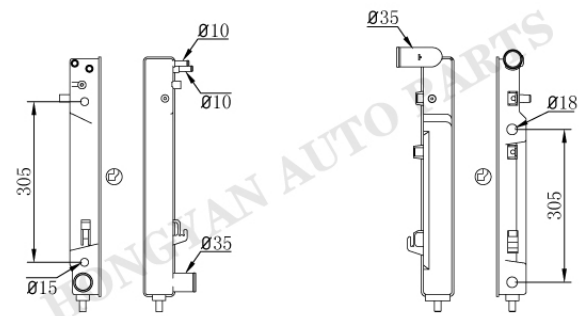

HOL-0013AT/MT

Tank size :(R8.5×4×5×59×450)
OEM :
DPI :
NISSENS :
APPLICATION :
97-00 HOLDEN COMMODORE

HOL-0014-1AT

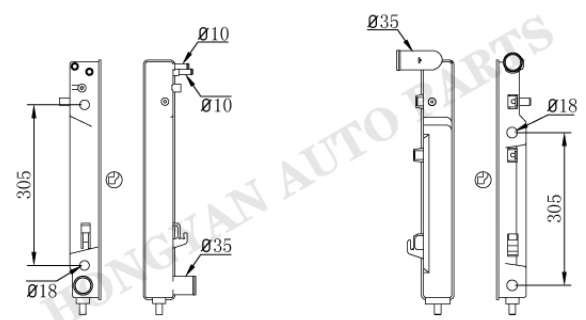

HOL-0013AT/MT

Tank size :(R8.5×4×5×59×450)
OEM :
DPI :
NISSENS :
APPLICATION :
97-00 HOLDEN COMMODORE

HOL-0015AT/MT

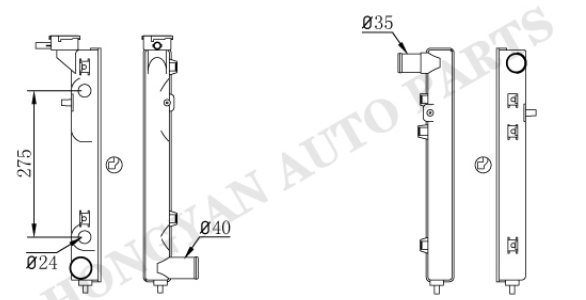

HOL-0016

Tank size :(R9×4×5×52×439)
OEM :
DPI :
NISSENS :
APPLICATION :
93-97 HOLDEN COMMODORE

HONGYAN AUTO PARTS

HOLDEN

HOL-0017

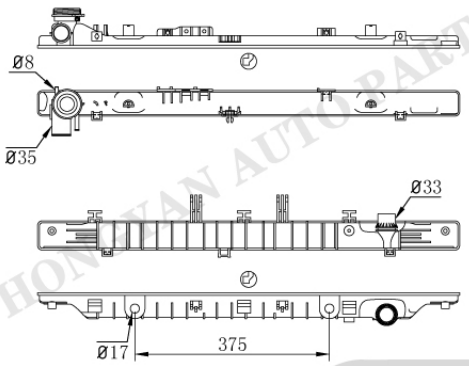

HOL-0018AT/MT

Tank size :(R9×4×5×48/55×794)
OEM :
DPI :
NISSENS :
APPLICATION :
HOLDEN COMMODORE

HOL-0019

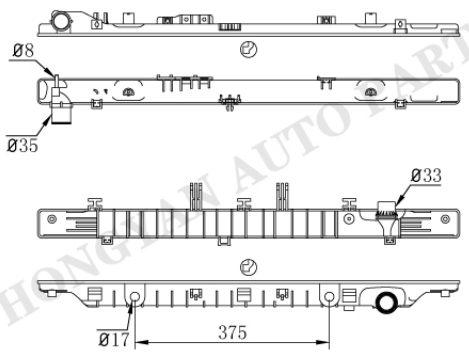

HOL-0018AT/MT

Tank size :(R9×4×5×48/55×794)
OEM :
DPI :
NISSENS :
APPLICATION :
HOLDEN COMMODORE

HOL-0021AT/MT

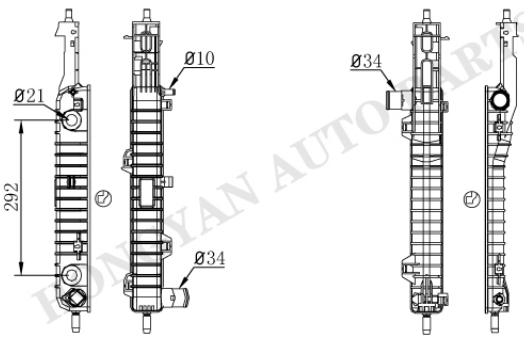

HOL-0020

Tank size :(R10×4.5×5×63×428)
OEM :4803040/4803041
DPI :
NISSENS :
APPLICATION :
08- HOLDEN BARINA

HOL-0022AT/MT

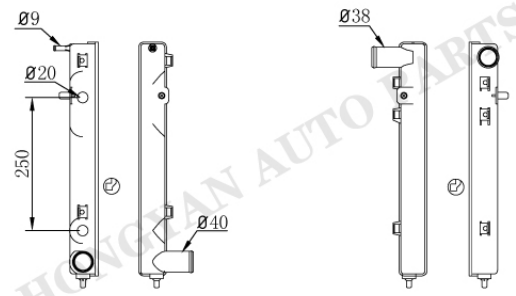

HOL-0023

Tank size :(R9.5×4.2×5.5×52×439.5)
OEM :
DPI :
NISSENS :
APPLICATION :
92- HOLDEN COMNODORE

HONGYAN AUTO PARTS

HOLDEN

	Tank size : OEM : DPI : NISSENS : APPLICATION :
	Tank size : OEM : DPI : NISSENS : APPLICATION :
	Tank size : OEM : DPI : NISSENS : APPLICATION :
	Tank size : OEM : DPI : NISSENS : APPLICATION :

HONGYAN AUTO PARTS

	Tank size : OEM : DPI : NISSENS : APPLICATION :
	Tank size : OEM : DPI : NISSENS : APPLICATION :
	Tank size : OEM : DPI : NISSENS : APPLICATION :
	Tank size : OEM : DPI : NISSENS : APPLICATION :

HONGYAN AUTO PARTS

HYUNDAI

HY-0001

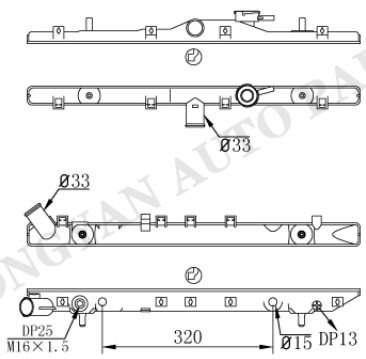

HY-0002AT/MT

Tank size :(R9×5×4.5×36/43.8×624.8)
OEM :2531022025
DPI :1816
NISSENS :622971
APPLICATION :
97-99 HYUNDAI ACCENT 1.5L

HY-0001

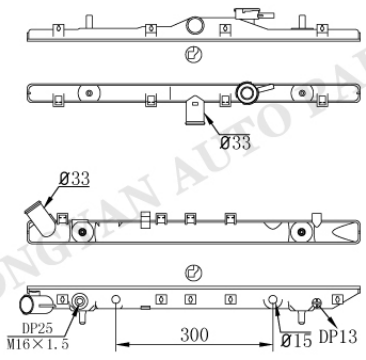

HY-0002-1AT

Tank size :(R9×5×4.5×36/43.8×624.8)
OEM :2531022025
DPI :1816
NISSENS :622971
APPLICATION :
97-99 HYUNDAI ACCENT 1.5L

HY-0001

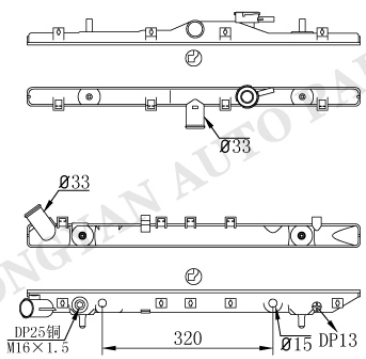

HY-0003AT/MT

Tank size :(R9×5×4.5×36/43.8×624.8)
OEM :2531022120/70
2531022A00/B00
DPI :2700
NISSENS :670011
APPLICATION :
95-96 HYUNDAI ACCENT 1.5L

HY-0001

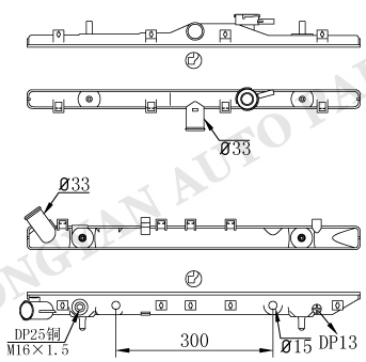

HY-0003-1AT

Tank size :(R9×5×4.5×36/43.8×624.8)
OEM :2531022120/70
2531022A00/B00
DPI :2700
NISSENS :670011
APPLICATION :
95-96 HYUNDAI ACCENT 1.5L

HONGYAN AUTO PARTS

HY-0001

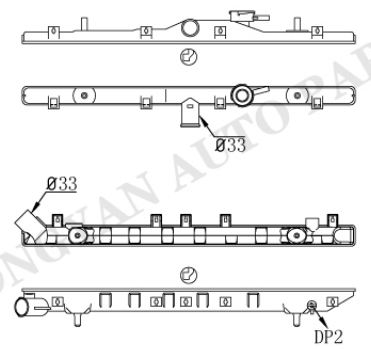

HY-0004

Tank size :(R9×5×4.5×36×624.8)
OEM :
DPI :
NISSENS :
APPLICATION :
95-96 HYUNDAI ACCENT 1.5L

HY-0001

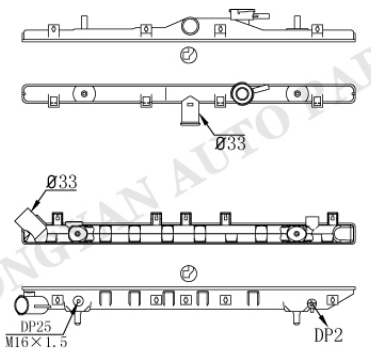

HY-0004-1

Tank size :(R9×5×4.5×36×624.8)
OEM :
DPI :
NISSENS :
APPLICATION :
95-96 HYUNDAI ACCENT 1.5L

HY-0005

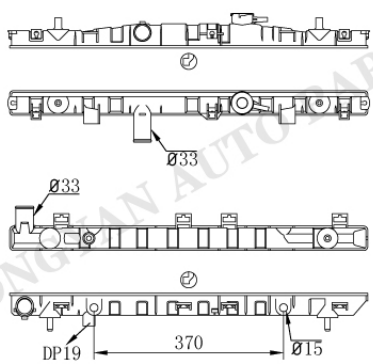

HY-0006AT/MT

Tank size :(R6.5×5×5×46.5×671.5)
OEM :253102D110
DPI :2387
NISSENS :67468
APPLICATION :
01-06 HYUNDAI ELANTRA 2.0L
03-08 HYUNDAI TIBURON 2.7L

HY-0007

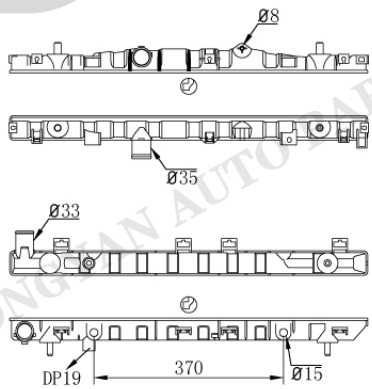

HY-0006AT/MT

Tank size :(R6.5×5×5×46.5×671.5)
OEM :253102D400
DPI :
NISSENS :67469
APPLICATION :
00- HYUNDAI ELANTRA 2.0L

HONGJIAN AUTO PARTS

HYUNDAI

HY-0008

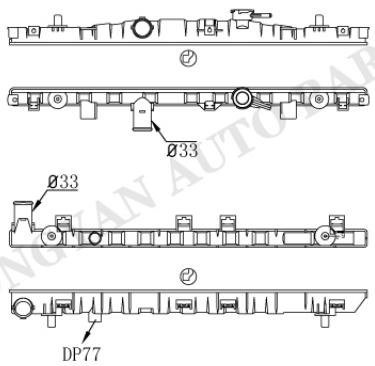

HY-0009

Tank size :(R6.5×5×5×46.5×671.5)
OEM :25B102D000
DPI :2586
NISSENS :
APPLICATION :
01-06 HYUNDAI ELANTRA 2.0L
03-08 HYUNDAI TIBURON 2.7L

HY-0010

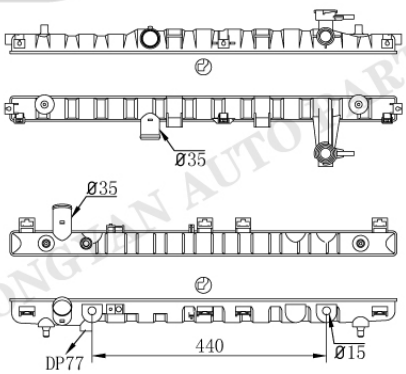

HY-0011AT/MT

Tank size :(R9×5×5×47×726.8)
OEM :2531026050/70/00
DPI :2389 2390
NISSENS :67030
APPLICATION :
01-06 HYUNDAI SANTA FE 2.4/2.7L

HY-0012

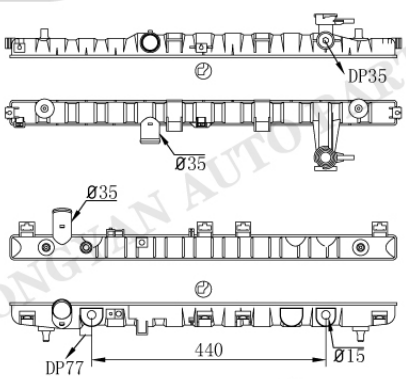

HY-0013AT/MT

Tank size :(R9×5×5×47×726.8)
OEM :2531026050/70/00
DPI :2389 2390
NISSENS :67030
APPLICATION :
01-06 HYUNDAI SANTA FE 2.4/2.7L

HY-0014

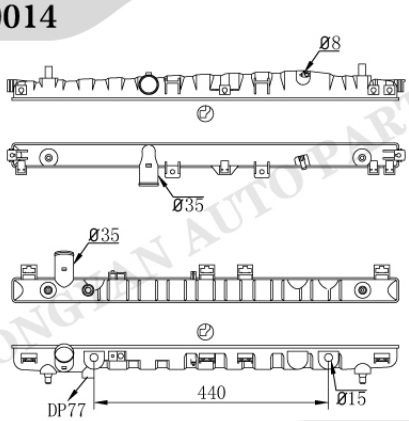

HY-0011AT/MT

Tank size :(R9×5×5×47×726.8)
OEM :253103A000/100/101
DPI :
NISSENS :67032
APPLICATION :
00-08 HYUNDAI TRAJET 2.0/2.7L

HY-3

HONGYAN AUTO PARTS

HY-0015

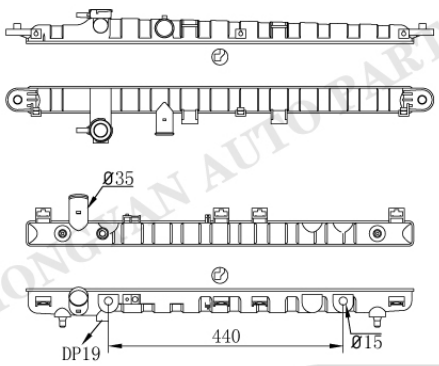

HY-0011AT/MT

Tank size :(R9×5×5×46.5×726.8)
OEM :2531038001 2531038050
DPI :2339
NISSENS :67026
APPLICATION :
99-05 HYUNDAI SONATA 2.4/2.7L

HY-0016

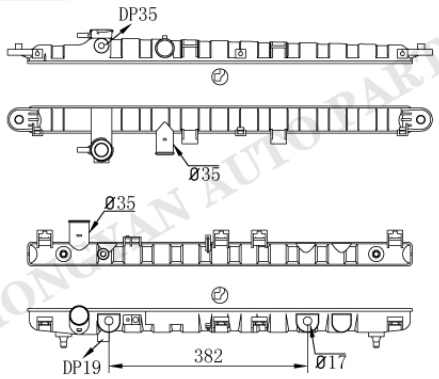

HY-0017AT/MT

Tank size :(R9×5×5×46.5×721.8)
OEM :
DPI :
NISSENS :
APPLICATION :
99-05 HYUNDAI SONATA 2.4/2.7L

HY-0018

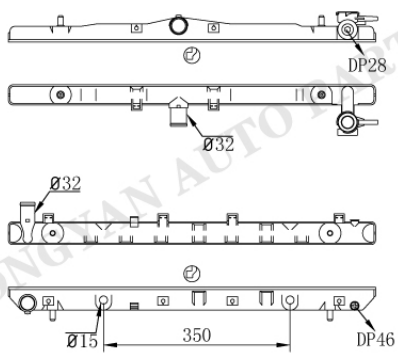

HY-0019AT/MT

Tank size :(R9×5×4.5×38/47.5×689)
OEM :2531027000 2531029010/700
DPI :1897
NISSENS :
APPLICATION :
96-00 HYUNDAI ELANTRA 1.8/2.0L
97-01 HYUNDAI TIBURON 1.8/2.0L

HY-0020

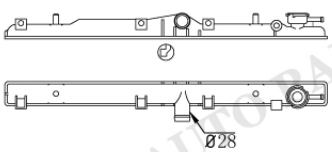

Tank size :(R6.5×5×5×46.5×605)
OEM :2531024000/1/2 2531024800
2531024100/700/701/702
DPI :1081 1188
NISSENS :
APPLICATION :
90-94 HYUNDAI EXCEL 1.5L
91-92 HYUNDAI SCOUPE 1.5L
90-94 MITSUBISHI PRECIS 1.5L

HONGYAN AUTO PARTS

HYUNDAI

HY-0022

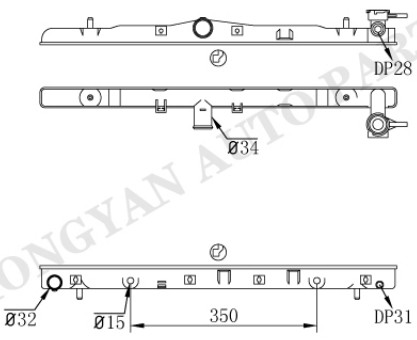

HY-0023AT/MT

Tank size :(R9×5×5×38×670)
OEM :2531027000
DPI :2391
NISSENS :
APPLICATION :
96-00 HYUNDAI ELANTRA 1.8/2.0L
97-01 HYUNDAI TIBURON 1.8/2.0L

HY-0024

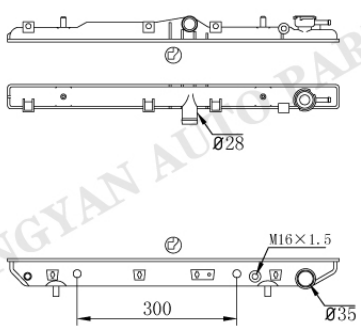

HY-0025AT/MT

Tank size :(R6.5×5×5×46.5×623)
OEM :
DPI :
NISSENS :
APPLICATION :
90-94 HYUNDAI EXCEL 1.5L
91-92 HYUNDAI SCOUPE 1.5L

HY-0026

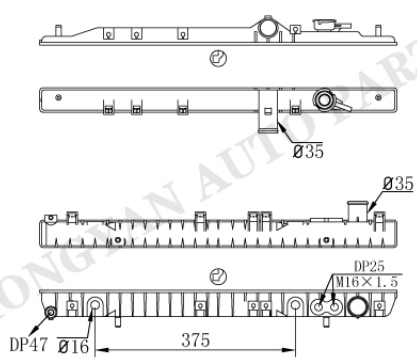

HY-0027AT/MT

Tank size :(R6.5×5×5×46.5/50.5×671.2)
OEM :2531028150/2 2531028400
2531028500/A00/B00/C00/D00
DPI :1399
NISSENS :62293
APPLICATION :
92-95 HYUNDAI ELANTRA 1.6/1.8L

HY-0028

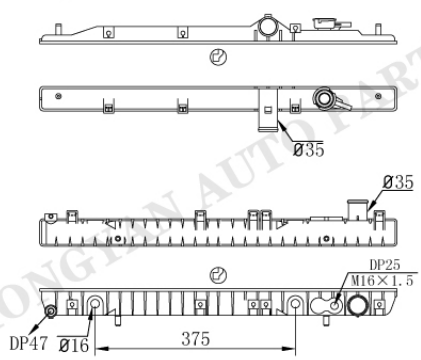

HY-0029AT/MT

Tank size :(R6.5×5×5×46.5/50.5×671.2)
OEM :2531028150/2 2531028400
2531028500/A00/B00/C00/D00
DPI :
NISSENS :
APPLICATION :
92-95 HYUNDAI ELANTRA 1.6/1.8L

HONGYAN AUTO PARTS

HY-0030

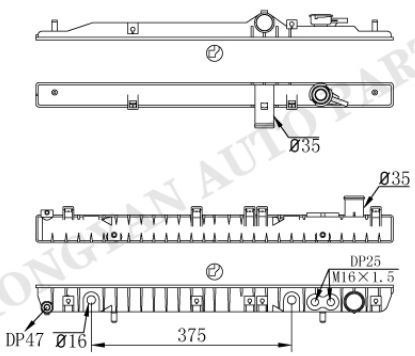

HY-0027AT/MT

Tank size :(R6.5×5×5×46.5/50.5×671.2)
OEM :
DPI :
NISSENS :
APPLICATION :
92-95 HYUNDAI ELANTRA 1.6/1.8L

HY-0031

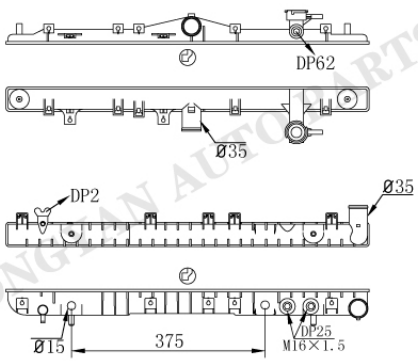

HY-0032AT/MT

Tank size :(R6.5×5×5×46.5/51×682)
OEM :2531033050/180/310/390
2531033410/451/490/B11
DPI :1286 1823
NISSENS :
APPLICATION :
92-94 HYUNDAI SONATA 2.0/3.0L

HY-0033

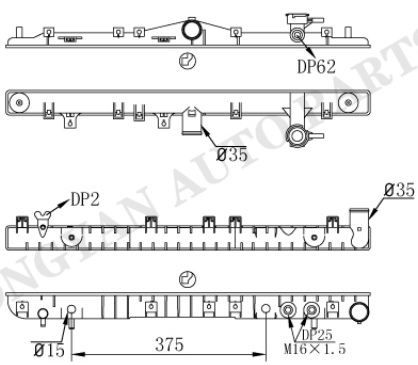

HY-0034AT/MT

Tank size :(R6.5×5×5×46/51×684)
OEM :
DPI :
NISSENS :
APPLICATION :
92-94 HYUNDAI SONATA 2.0/3.0L

HY-0035

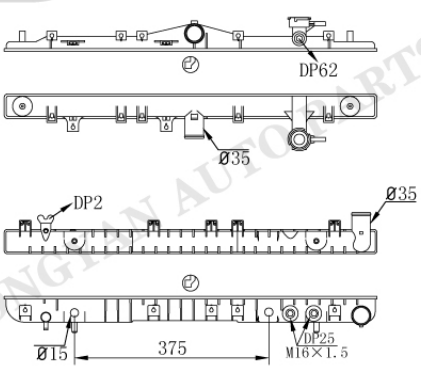

HY-0036AT/MT

Tank size :(R6.5×5×5×46/51×700.5)
OEM :2531033A10/300/330
DPI :
NISSENS :67004
APPLICATION :
92-94 HYUNDAI SONATA 2.0/3.0L

HONGTAN AUTO PARTS

HYUNDAI

HY-0037

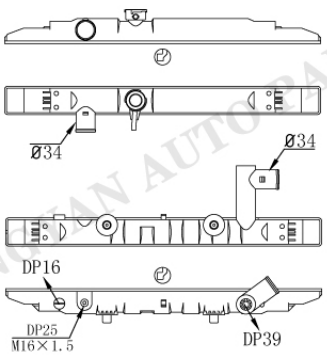

HY-0038

Tank size :(R6.5×5×5×53.5×592.5)
OEM :253104B600
DPI :
NISSENS :67497
APPLICATION :
97-01 HYUNDAI H-1 2.5L
93-00 HYUNDAI H100 2.5L
93-00 HYUNDAI H150 2.5L

HY-0037

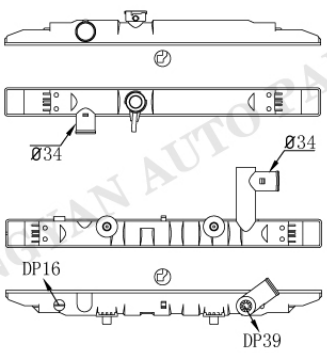

HY-0039

Tank size :(R6.5×5×5×53.5×592.5)
OEM :253004B100
DPI :
NISSENS :67498 67499
APPLICATION :
97-01 HYUNDAI H-1 2.5L
93-00 HYUNDAI H100 2.5L
93-00 HYUNDAI H150 2.5L

HY-0040

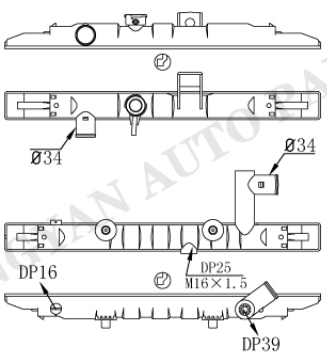

HY-0041

Tank size :(R6.5×5×5×53.5×592.5)
OEM :2530043600/610/810
DPI :
NISSENS :67015
APPLICATION :
93-00 HYUNDAI H100 2.4/2.5L
93-00 HYUNDAI H150 2.4/2.5L

HY-0040

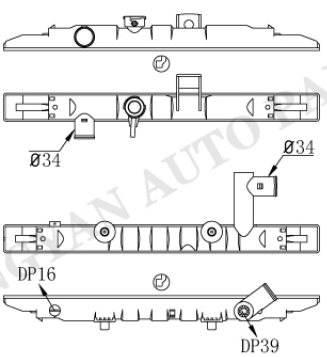

HY-0042

Tank size :(R6.5×5×5×53.5×592.5)
OEM :2530043000/820
DPI :
NISSENS :67034
APPLICATION :
93-00 HYUNDAI H100 2.4/2.5L
93-00 HYUNDAI H150 2.4/2.5L

HONGYAN AUTO PARTS

HYUNDAI

HY-0043AT/MT

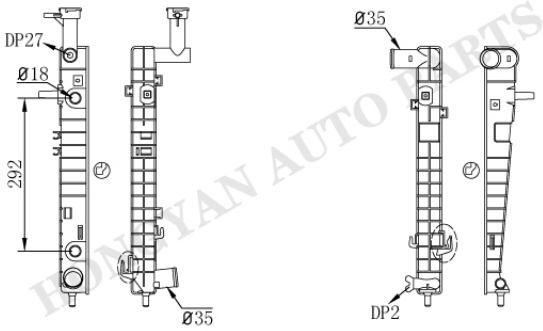

HY-0044

Tank size :(R8×5×4.5×46.5×465.5)
OEM :253102E800/01/50/70
DPI :2785 2786
NISSENS :
APPLICATION :
05-07 HYUNDAI TUCSON 2.7L
05-10 KIA SPORTAGE 2.7L

HY-0045AT/MT

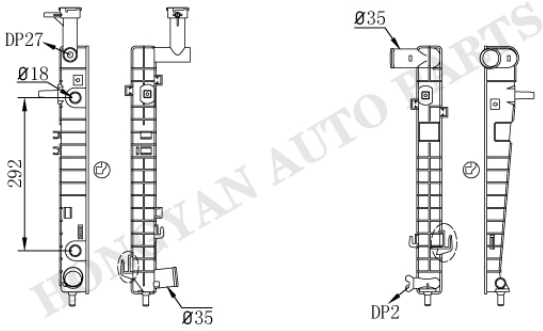

HY-0046

Tank size :(R8×5×4.5×46.5×465.5)
OEM :253102E800/01/50/70
DPI :
NISSENS :
APPLICATION :
05- HYUNDAI TUCSON 2.7L
05-10 KIA SPORTAGE 2.7L

HY-0047AT/MT

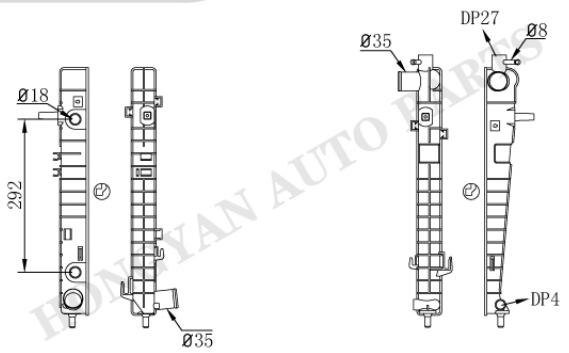

HY-0048

Tank size :(R8×5×4.5×46.5×465.5)
OEM :253102E500/700/900
DPI :
NISSENS :67486
APPLICATION :
04-10 HYUNDAI TUCSON 2.0L
04-06 KIA SPORTAGE 2.0L

HY-0049AT/MT

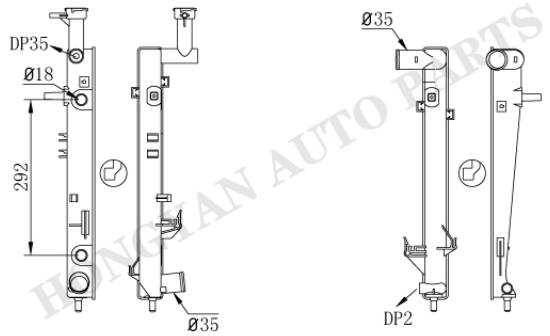

HY-0050

Tank size :(R8×5×4.5×46.5×473)
OEM :253102E100/400/600
DPI :13070
NISSENS :67479
APPLICATION :
04-10 HYUNDAI TUCSON 2.0L
04-10 KIA SPORTAGE 2.0L

HONGYAN AUTO PARTS

HYUNDAI

HY-0051

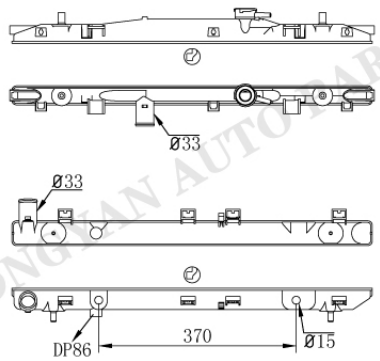

HY-0052AT/MT

Tank size :(R8.5×5×4×36/47×677)
OEM :253102D510/00
DPI :
NISSENS :67025
APPLICATION :
00- HYUNDAI ELANTRA 1.6/2.0L
00- HYUNDAI LANTRA 1.5/1.6/2.0L

HY-0053

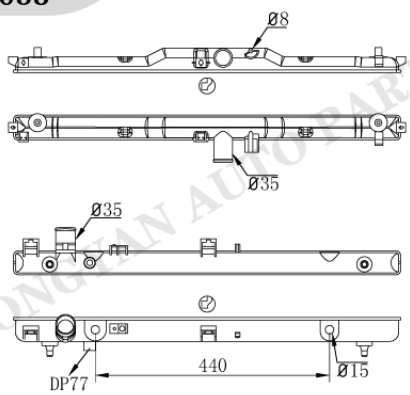

HY-0054AT/MT

Tank size :(R9×5×5×46.5×726.8)
OEM :2531026410
DPI :
NISSENS :675017
APPLICATION :
03-06 HYUNDAI SANTA FE 2.0L

HY-0055

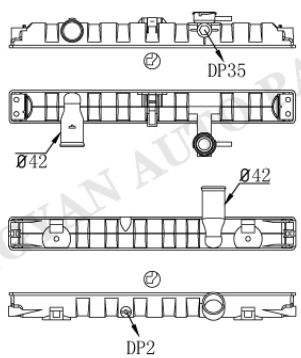

HY-0056

Tank size :(R9×5×5×62×537)
OEM :253015H601
DPI :
NISSENS :
APPLICATION :
HYUNDAI TRUCK

HY-0057

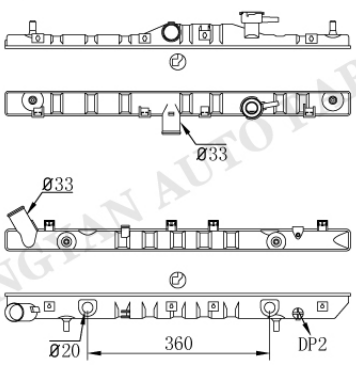

HY-0058AT/MT

Tank size :(R6.5×5×4.5×46×649)
OEM :
DPI :
NISSENS :
APPLICATION :
95-99 HYUNDAI ACCENT

HONGTAN AUTO PARTS

HY-0059

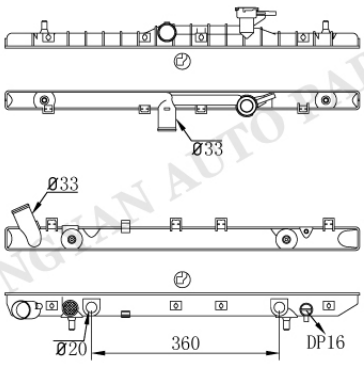

HY-0060AT/MT

Tank size :(R8×5×5×36/44×666)
OEM :2531025050/100/101/150/151
2531025152/300/400/401
DPI :2338
NISSENS :67023
APPLICATION :
00-04 HYUNDAI ACCENT 1.3/1.5/1.6L
04-05 DODGE VERNA 1.6L

HY-0059

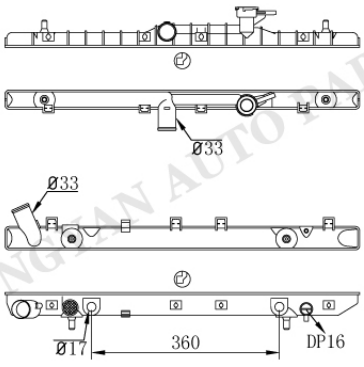

HY-0060-1AT

Tank size :(R8×5×5×36/44×666)
OEM :
DPI :
NISSENS :
APPLICATION :
00-04 HYUNDAI ACCENT 1.3/1.5/1.6L
04-05 DODGE VERNA 1.6L

HY-0059

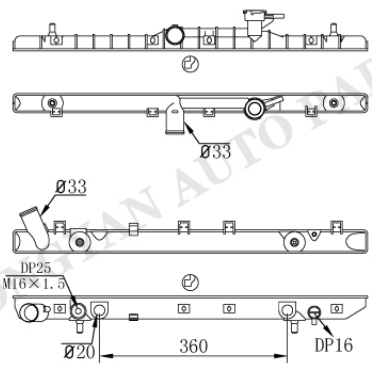

HY-0061AT/MT

Tank size :(R8×5×5×36/44×666)
OEM :
DPI :
NISSENS :
APPLICATION :
00-04 HYUNDAI ACCENT 1.3/1.5/1.6L

HY-0059

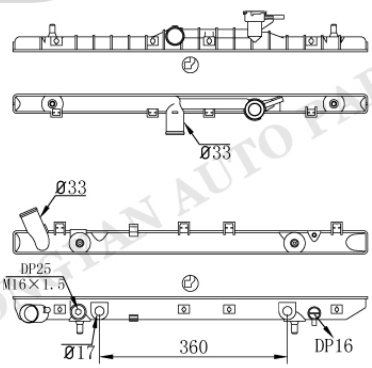

HY-0061-1AT

Tank size :(R8×5×5×36/44×666)
OEM :
DPI :
NISSENS :
APPLICATION :
00-04 HYUNDAI ACCENT 1.3/1.5/1.6L

HONGYAN AUTO PARTS

HYUNDAI

HY-0062

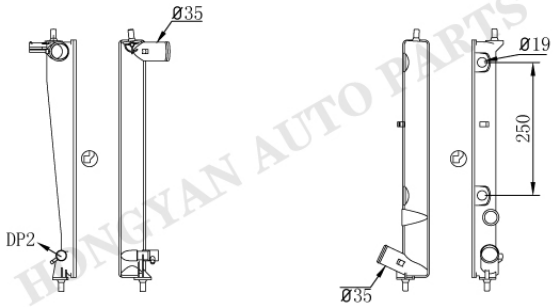

HY-0063AT/MT

Tank size :(R9×5×5×50×446)
OEM :
DPI :
NISSENS :
APPLICATION :
97- HYUNDAI H200 2.4/2.5L

HY-0062

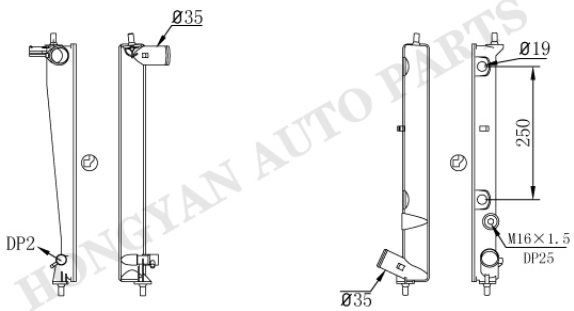

HY-0064AT/MT

Tank size :(R9×5×5×50×446)
OEM :253104A000/100/150/050
DPI :
NISSENS :670381 67039 67040
APPLICATION :
97- HYUNDAI H200 2.4/2.5/2.6L(DIESEL)

HY-0065

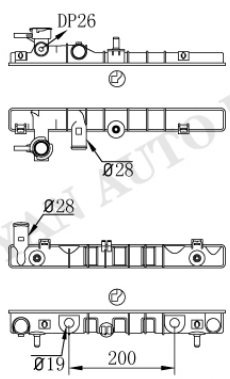

HY-0066AT/MT

Tank size :(R8.5×5×5×44×407)
OEM :253100250/1
DPI :
NISSENS :67016A
APPLICATION :
98- HYUNDAI ATOS 1.0L

HY-0067

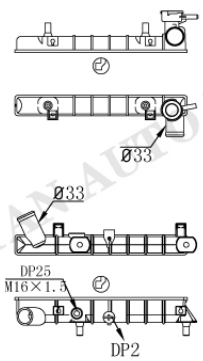

HY-0068

Tank size :(R6×5×5×38×324)
OEM :2531025050
DPI :
NISSENS :
APPLICATION :
99- HYUNDAI ACCENT 1.3/1.5/1.6L

HONGYAN AUTO PARTS

HY-11

HY-0067

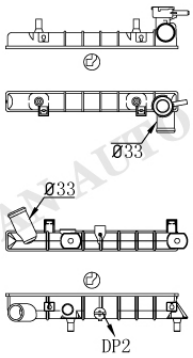

HY-0069

Tank size :(R6×5×5×38×324)
OEM :2531025050
DPI :
NISSENS :67022
APPLICATION :
99- HYUNDAI ACCENT 1.3/1.5/1.6L

HY-0070

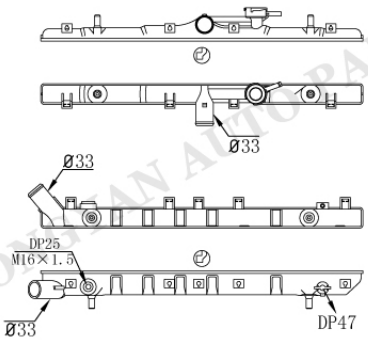

HY-0071

Tank size :(R6.5×5×5×38.2×604.2)
OEM :2531022025
DPI :
NISSENS :
APPLICATION :
00-04 HYUNDAI ACCENT 1.3/1.5/1.6L

HY-0070

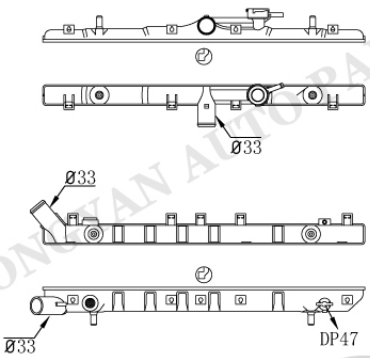

HY-0072

Tank size :(R6.5×5×5×38.2×604.2)
OEM :
DPI :
NISSENS :
APPLICATION :
00-04 HYUNDAI ACCENT 1.3/1.5/1.6L

HY-0073

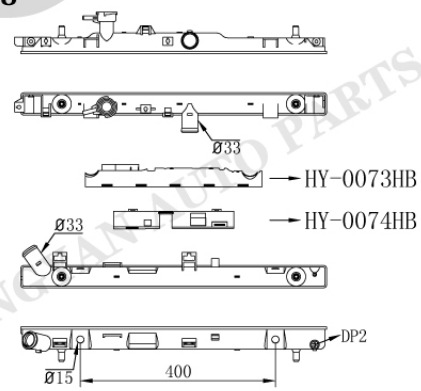

HY-0074AT/MT

Tank size :(R6×5×5×46.5×627)
OEM :2531017100/000/101
DPI :
NISSENS :67480 67481
APPLICATION :
01-10 HYUNDAI MATRIX 1.5/1.6/1.8L

HONGYAN AUTO PARTS

HYUNDAI

HY-0075

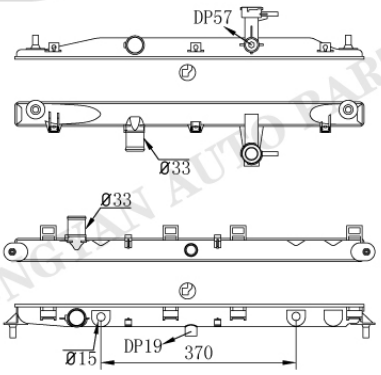

Tank size :(R6×5×5×46.5×656)
OEM :2531010 253101E151
DPI :2896
NISSENS :67502 67509
APPLICATION :
06-11 HYUNDAI ACCENT 1.6L
06-10 DODGE ATTITUDE 1.4/1.6L

HY-0076AT/MT

HY-0077

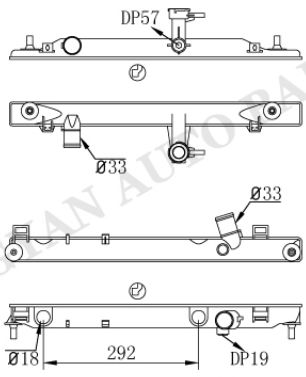

Tank size :(R6.5×5×4.5×46.5×549.5)
OEM :253101E300/301/350
DPI :
NISSENS :67504
APPLICATION :
05-10 HYUNDAI ACCENT 1.5L(DIESEL)

HY-0078AT/MT

HY-0079AT/MT

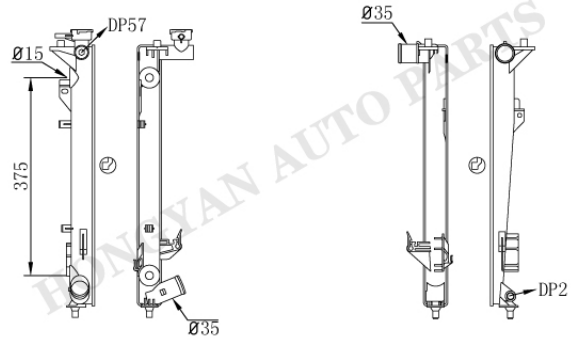

Tank size :(R8×5×4.5×46.3×490)
OEM :253103K080/180/190/280/290
253103L290
DPI :2831 2832
NISSENS :67507
APPLICATION :
06-11 HYUNDAI AZERA 3.3/3.8L
06-10 HYUNDAI SONATA 2.4/3.3L
07-10 KIA MAGENTIS 2.4/2.7L
07-10 KIA OPTIMA 2.4/2.7L

HY-0080

HY-0081AT/MT

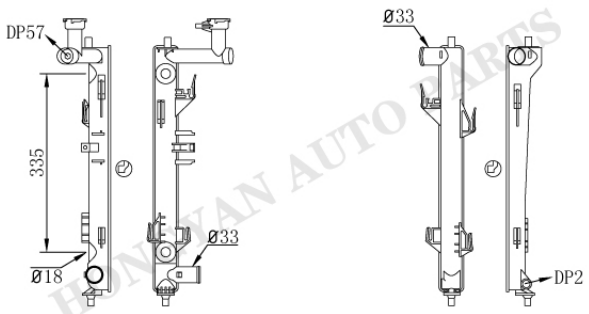

Tank size :(R6.5×5×4.5×46.5×461.5)
OEM :253102H050
DPI :2928 2958
NISSENS :66674 66676
APPLICATION :
07-12 HYUNDAI ELANTRA 1.0L

HY-0082

HY-13

HONGYAN AUTO PARTS

HY-0083

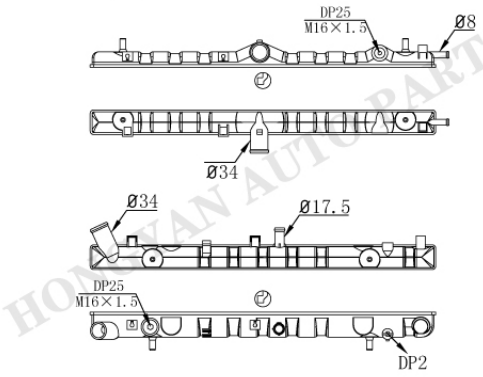

HY-0084

Tank size :(R6.5×5×4.5×46×649)
OEM :
DPI :
NISSENS :
APPLICATION :

HY-0085

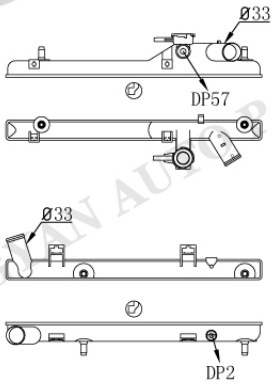

HY-0086

Tank size :(R6.5×5×4.5×38×481)
OEM :253125810
DPI :
NISSENS :67049
APPLICATION :
99- HYUNDAI ACCENT 1.5L

HY-0087

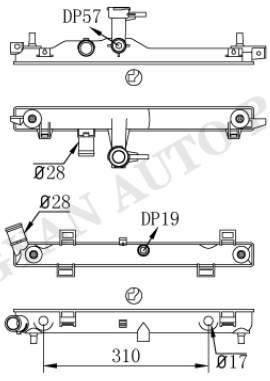

HY-0088AT/MT

Tank size :(R6.5×5×4.5×46×452)
OEM :253100X000/060/200
DPI :
NISSENS :67610
APPLICATION :
07-15 HYUNDAI I10 1.1L

HY-0089

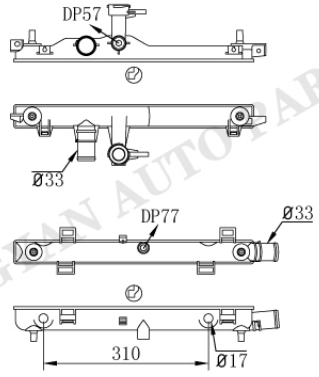

HY-0090AT/MT

Tank size :(R6.5×5×4.5×46×452)
OEM :253100X150/170/450
DPI :
NISSENS :67547
APPLICATION :
08-15 HYUNDAI I10 1.2L

HONGYAN AUTO PARTS

HYUNDAI

HY-0091

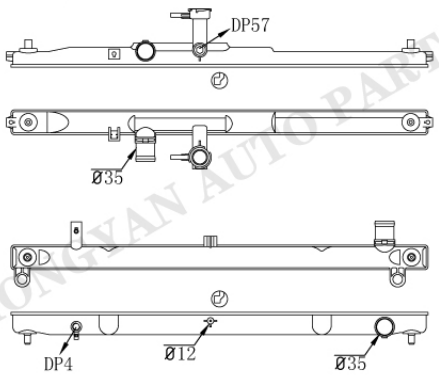

HY-0092

Tank size :(R6.5×5×5×46.5×783)
OEM :253104H100/350
DPI :
NISSENS :67095
APPLICATION :
07- HYUNDAI H-1 2.5L(DIESEL)

HY-0093

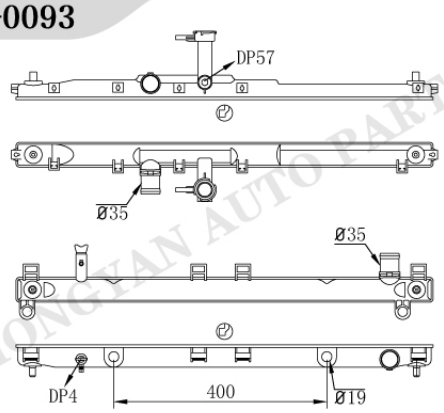

HY-0094AT/MT

Tank size :(R6.5×5×5×46.5×783)
OEM :253104H550 253104H700
DPI :
NISSENS :67472 67474
APPLICATION :
08-15 HYUNDAI H-1 2.5L(DIESEL)

HY-0095

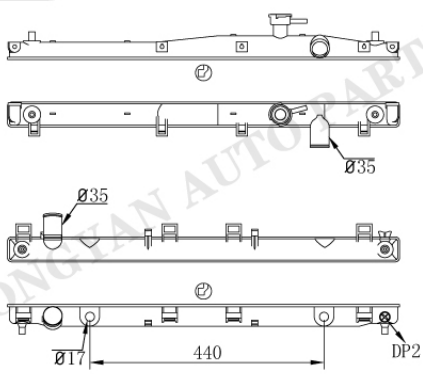

HY-0096AT/MT

Tank size :(R8×5×4.5×47.5×736)
OEM :253103J100
DPI :2959
NISSENS :
APPLICATION :
07-12 HYUNDAI VERACRUZ 3.8L

HY-0097

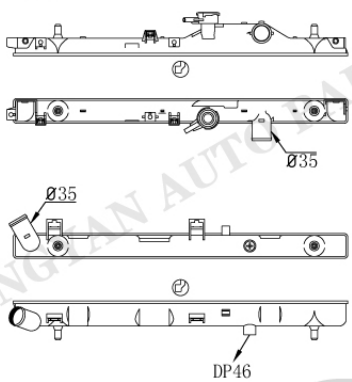

HY-0098

Tank size :(R6.5×5×5×46×628)
OEM :2531017800
DPI :
NISSENS :67484
APPLICATION :
01- HYUNDAI MATRIX 1.5L

HY-15

HONGYAN AUTO PARTS

HY-0099

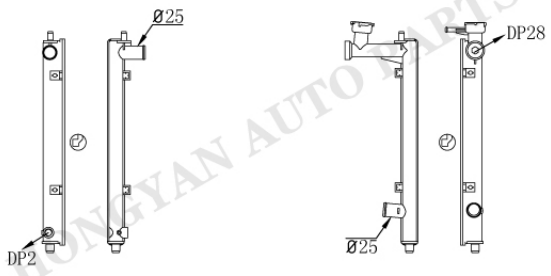

HY-0100

Tank size :(R9×4.5×4.5×32×388)
OEM :
DPI :
NISSENS :
APPLICATION :
NAZA SUTERA(纳莎 马来西亚)

HY-0101

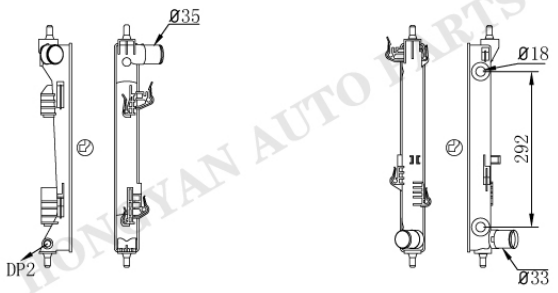

HY-0102AT/MT

Tank size :(R8×5×4.5×46.3×392)
OEM :253101R000 253101R150
DPI :13252 13253
NISSENS :66756 66757
APPLICATION :
12-15 HYUNDAI ACCENT 1.6
12-16 KIA RIO 1.6L
12-14 DODGE ATTITUDE 1.4/1.6L

HY-0103

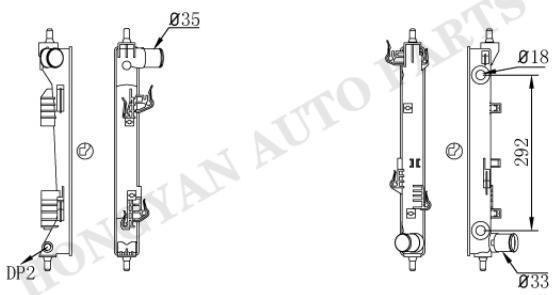

HY-0104AT/MT

Tank size :(R8×5×4.5×46.3×392)
OEM :
DPI :
NISSENS :
APPLICATION :
12-15 HYUNDAI ACCENT 1.6L
12-16 KIA RIO 1.6L

HY-0101

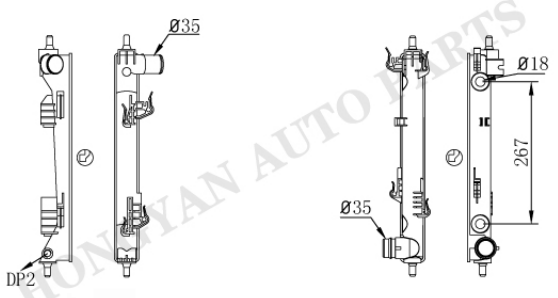

HY-0105AT/MT

Tank size :(R8×5×4.5×46.3×392)
OEM :253101R300
DPI :
NISSENS :675002 67611
APPLICATION :
12-14 HYUNDAI I20 1.4L

HONGYAN AUTO PARTS

HYUNDAI

HY-0106

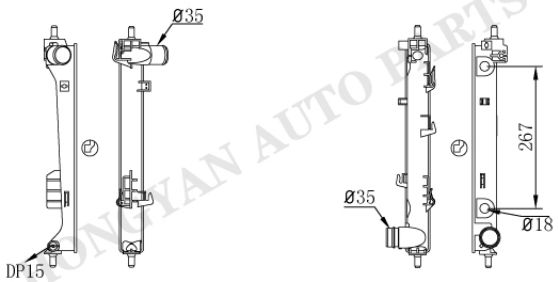

HY-0107AT/MT

Tank size :(R8×5×4.5×46.3×392)
OEM :253101J050/500 253104P050
DPI :
NISSENS :67548 67609
APPLICATION :
08-15 HYUNDAI I20 1.2/1.4L

HY-0108

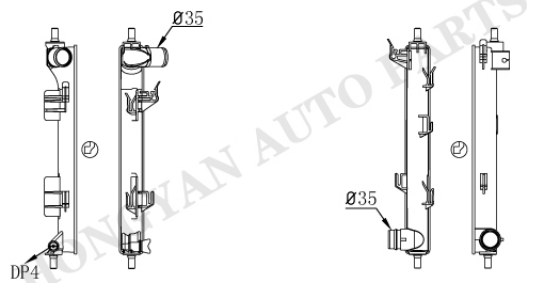

HY-0109

Tank size :(R8×5×4.5×46.3×392)
OEM :
DPI :
NISSENS :67616
APPLICATION :
08-15 HYUNDAI I20 1.4L

HY-0108

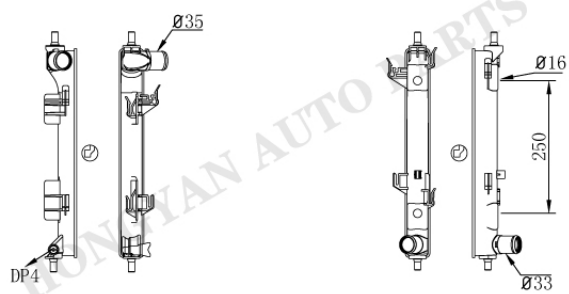

HY-0110AT/MT

Tank size :(R8×5×4.5×46.3×392)
OEM :
DPI :
NISSENS :
APPLICATION :
08-15 HYUNDAI I20 1.4L

HY-0111

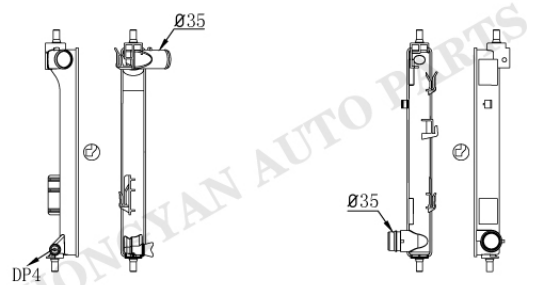

HY-0112

Tank size :(R8×5×4.5×46.3×393.5)
OEM :
DPI :
NISSENS :67615
APPLICATION :
08-15 HYUNDAI I20 1.4L

HONGYAN AUTO PARTS

HYUNDAI

HY-0113

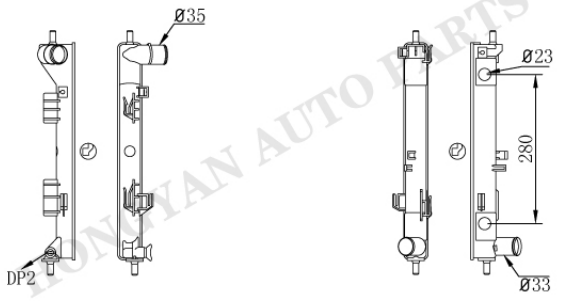

HY-0114AT/MT

Tank size :(R6.5×4.5×5×46×407.5)
OEM :253103X100 253103X101
DPI :13202
NISSENS :675014
APPLICATION :
11-13 HYUNDAI ELANTRA 1.8L

HY-0113

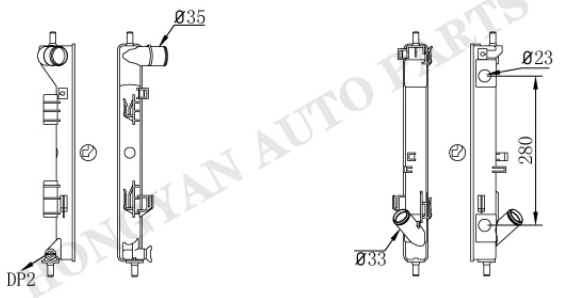

HY-0115AT/MT

Tank size :(R6.5×4.5×5×46×407.5)
OEM :253103X010 253103X011
DPI :13333
NISSENS :67555
APPLICATION :
11-13 HYUNDAI ELANTRA 1.8L
12-13 KIA SOUL 1.6/2.0L
13-14 KIA FORTE 1.8/2.0L

HY-0116AT/MT

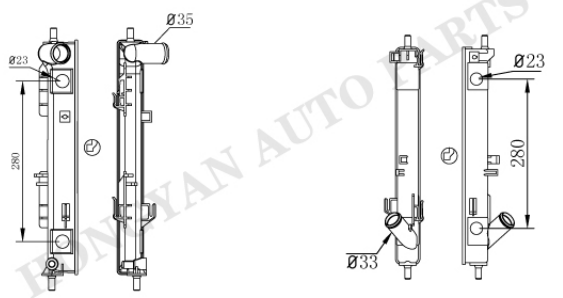

HY-0115AT/MT

Tank size :(R6.5×4.5×5×46×407.5)
OEM :253103X500 253103X600
DPI :13412
NISSENS :
APPLICATION :
15-16 HYUNDAI ELANTRA 1.8/2.0L

HY-0117AT/MT

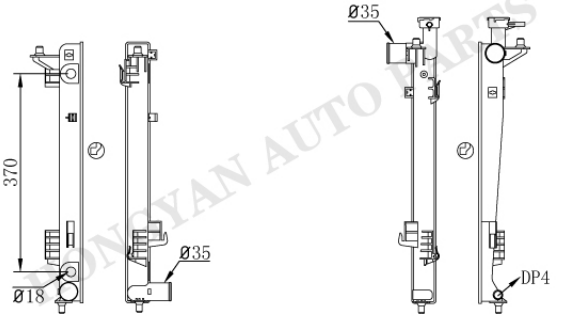

HY-0118

Tank size :(R8×5×4.5×46.3×490)
OEM :253102S550 253102Y520
DPI :13150
NISSENS :67514 67515
APPLICATION :
10-15 HYUNDAI TUCSON 2.0/2.4L
11-15 KIA SPORTAGE 2.4L

HONGYAN AUTO PARTS

HY-18

HYUNDAI

HY-0119AT/MT

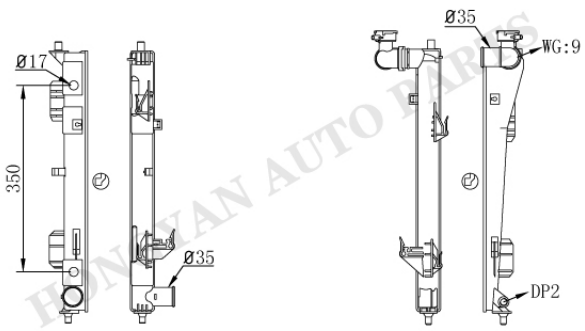

HY-0120

Tank size :(R8×5×4.5×46.3×490)
OEM :253101U250
DPI :13191 13391
NISSENS :
APPLICATION :
10-12 HYUNDAI SANTA 2.4/3.5L
10-12 HYUNDAI SANTA FE 2.4/3.5L
12-14 KIA OPTIMA 2.4L
11-13 KIA SORENTO 2.4/3.5L

HY-0119-1AT

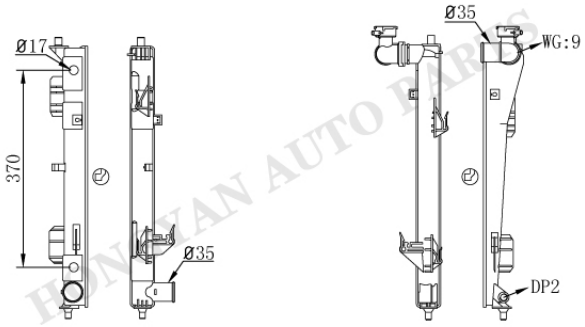

HY-0120

Tank size :(R8×5×4.5×46.3×490)
OEM :
DPI :
NISSENS :
APPLICATION :
10-12 HYUNDAI SANTA 2.4/3.5L
10-12 HYUNDAI SANTA FE 2.4/3.5L
12-14 KIA OPTIMA 2.4L
11-13 KIA SORENTO 2.4/3.5L

HY-0121AT/MT

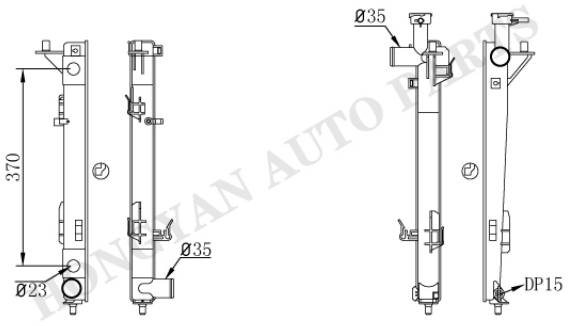

HY-0122

Tank size :(R8×5×4.5×46.3×490)
OEM :253101U200 253101U250
DPI :13194
NISSENS :67522 67521
APPLICATION :
10-14 HYUNDAI SANTA FE 2.4/3.3/3.5L
11-15 HYUNDAI SORENTO 2.4/3.3/3.5L

HY-0121-1AT

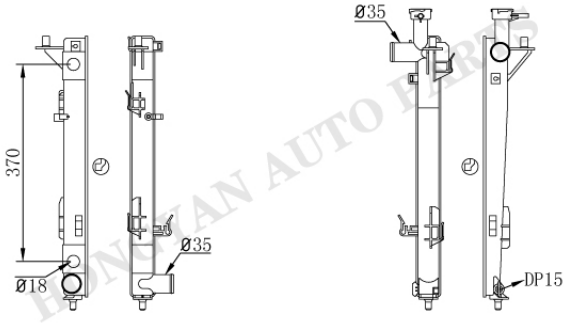

HY-0122

Tank size :(R8×5×4.5×46.3×490)
OEM :253101U200 253101U250
DPI :13194
NISSENS :67522 67521
APPLICATION :
10-14 HYUNDAI SANTA FE 2.4/3.3/3.5L
11-15 HYUNDAI SORENTO 2.4/3.3/3.5L

HY-19

HY-0123AT/MT

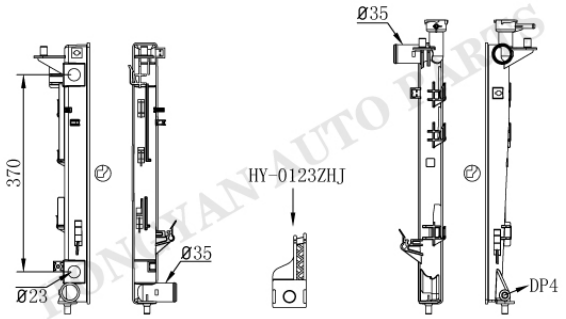

HY-0124

Tank size :(R8×5×4.5×46.3×490)
OEM :
DPI :
NISSENS :67466
APPLICATION :
10-15 HYUNDAI IX35 2.0/2.4L

HY-0125AT/MT

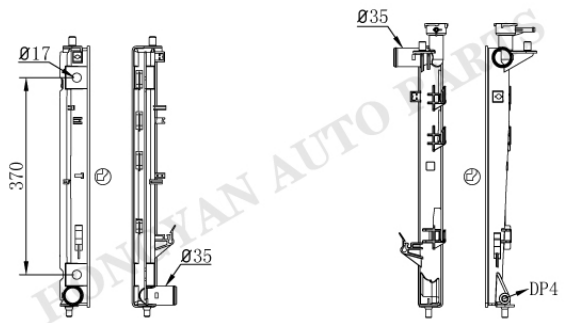

HY-0124

Tank size :(R8×5×4.5×46.3×490)
OEM :
DPI :
NISSENS :
APPLICATION :
10-15 HYUNDAI IX35 2.0/2.4L

HY-0126

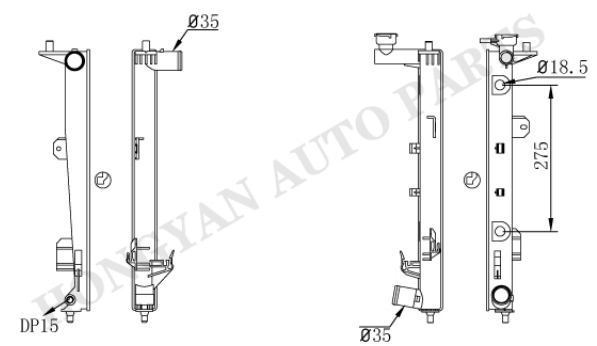

HY-0127AT/MT

Tank size :(R6.5×5×4.7×46.5×490)
OEM :253102M300 253103M140
DPI :13059
NISSENS :
APPLICATION :
09-12 HYUNDAI GENESIS COUPE 3.8L

HY-0126

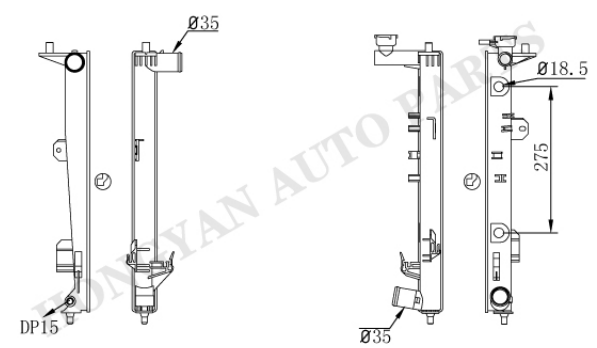

HY-0128AT/MT

Tank size :(R6.5×5×4.7×46.5×490)
OEM :253103M180 253103M900
DPI :13085
NISSENS :
APPLICATION :
09-11 HYUNDAI GENESIS 4.6L

HYUNDAI

HY-0129

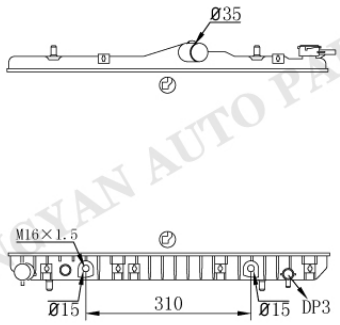

Tank size :(R6×5×5×46×603)
OEM :
DPI :
NISSENS :
APPLICATION :

HY-0130AT/MT

HY-0131

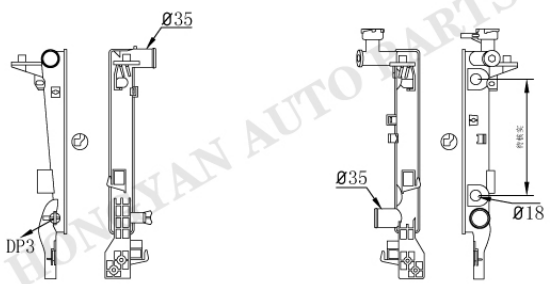

Tank size :(R8×5×4.6×46.7×347)
OEM :253102M100
DPI :13120
NISSENS :67554
APPLICATION :
10-12 HYUNDAI GENESIS COUPE 2.0L

HY-0132AT/MT

HY-0133

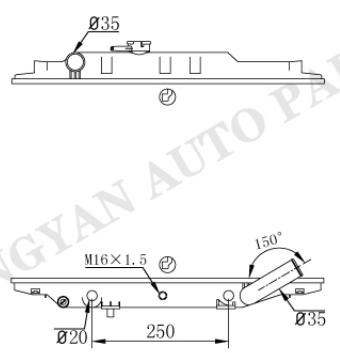

Tank size :(R8×5×4×47×587)
OEM :
DPI :
NISSENS :
APPLICATION :
93-97 HYUNDAI H100 2.4/2.5L

HY-0134AT/MT

HY-0135

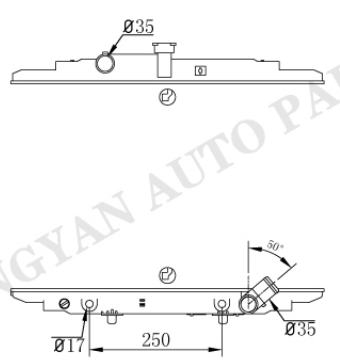

Tank size :(R6.5×5×5×62×588)
OEM :253104F210
DPI :
NISSENS :66966
APPLICATION :
04- HYUNDAI H100 2.5L

HY-0136AT/MT

HONGYAN AUTO PARTS

HY-0137

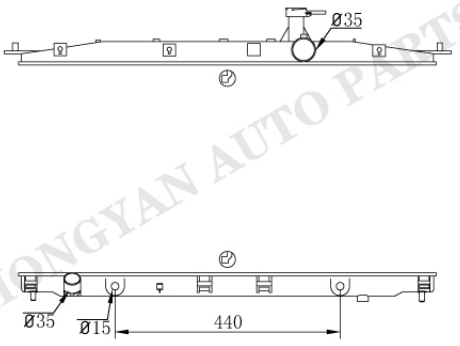

HY-0138AT/MT

Tank size :(R6.5×5×4.5×46.5×783.5)
OEM :253100W000 253100W100
DPI :2997
NISSENS :
APPLICATION :
07-09 HYUNDAI SANTA FE 2.7/3.3L

HY-0139AT/MT

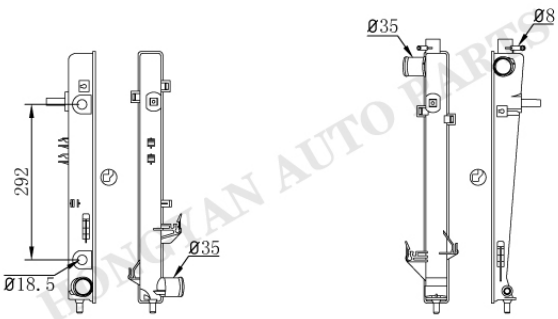

HY-0140

Tank size :(R6.5×5×4.6×46.5×473)
OEM :
DPI :
NISSENS :
APPLICATION :
05- HYUNDAI TUCSON 2.0L

HY-0141

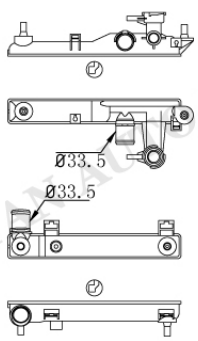

HY-0142

Tank size :(R6×5×4.7×46.5×324.5)
OEM :253101C200
DPI :
NISSENS :67093
APPLICATION :
02-09 HYUNDAI GETZ 1.1/1.3/1.4/1.5L
02-09 HYUNDAI TB 1.1/1.3/1.4/1.5L

HY-0143

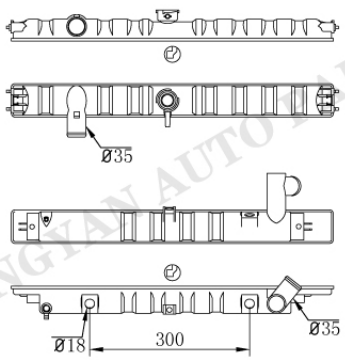

HY-0144AT/MT

Tank size :(R6.5×5×5×62.5×604.5)
OEM :HR171401 HR171501 HR171512
DPI :
NISSENS :67046 67047
APPLICATION :
91- HYUNDAI GALLOPER 2.5L

HONGYAN AUTO PARTS

HYUNDAI

HY-0145AT/MT

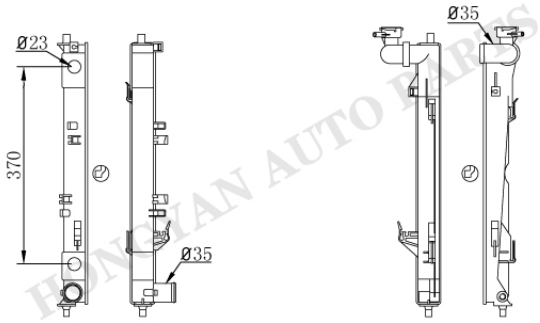

HY-0146

Tank size :(R6.5×5×4.7×46.5×490.7)
OEM :253103Q600
DPI :13189
NISSENS :
APPLICATION :
11-14 HYUNDAI SONATA 2.0L
11-15 KIA OPTIMA 2.0L

HY-0145-1AT

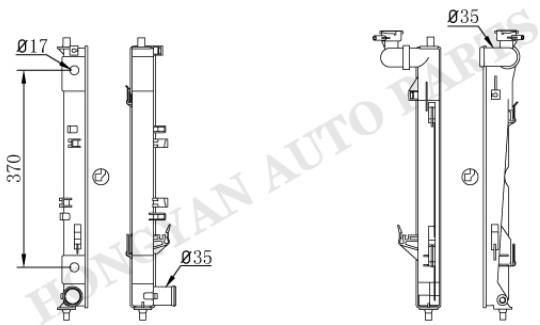

HY-0146

Tank size :(R6.5×5×4.7×46.5×490.7)
OEM :253103Q600
DPI :13189
NISSENS :
APPLICATION :
11-14 HYUNDAI SONATA 2.0L
11-15 KIA OPTIMA 2.0L

HY-0147AT/MT

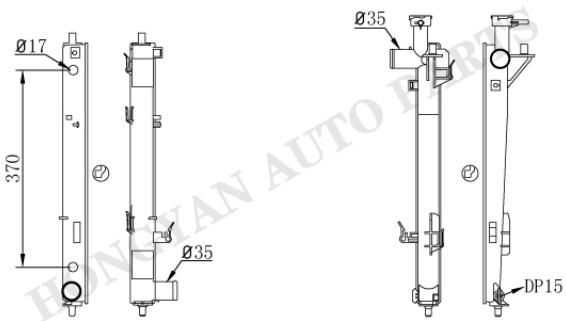

HY-0122

Tank size :(R8×5×4.5×46.3×490)
OEM :253102B850
DPI :13373
NISSENS :67518
APPLICATION :
10-15 HYUNDAI SANTA FE 2.0L

HY-0147-1AT

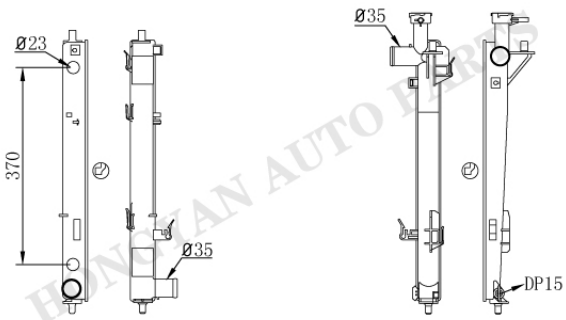

HY-0122

Tank size :(R8×5×4.5×46.3×490)
OEM :253102B850
DPI :13373
NISSENS :67518
APPLICATION :
10-15 HYUNDAI SANTA FE 2.0L

HONGYAN AUTO PARTS

HY-23

HY-0148AT/MT

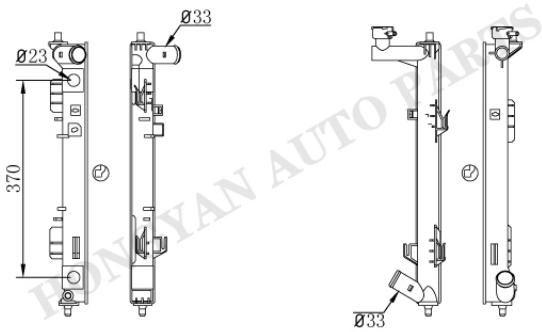

HY-0149

Tank size :(R8×5×4.5×46.5×490.5)
OEM :
DPI :
NISSENS :
APPLICATION :
12- HYUNDAI MISTRA

HY-0150



HY-0151

Tank size :(R8×5×4.5×46.5×490.5)
OEM :253104R000
DPI :13249
NISSENS :
APPLICATION :
11-14 HYUNDAI SONATA 2.4L(ELECTRIC/GAS)
11-14 KIA OPTIMA 2.4L(ELECTRIC/GAS)

HY-0152

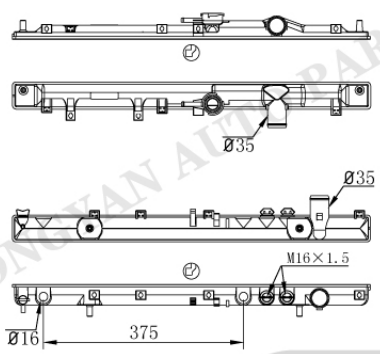

HY-0153AT/MT

Tank size :(R6.5×5×4×49.5×672)
OEM :
DPI :
NISSENS :
APPLICATION :
97- HYUNDAI SANTAMO

HY-0154

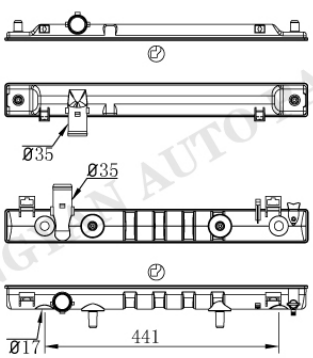

HY-0155AT/MT

Tank size :(R6×5×3.5×62×569)
OEM :25310H1310
DPI :
NISSENS :67482
APPLICATION :
01-03 HYUNDAI TERRACAN 3.0L

HONGYAN AUTO PARTS

HYUNDAI

HY-0154

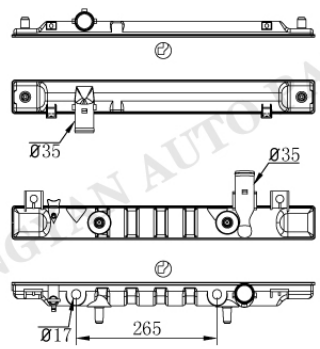

HY-0156AT/MT

Tank size :(R6×5×3.5×62×569)
OEM :
DPI :
NISSENS :
APPLICATION :
01-03 HYUNDAI TERRACAN 3.0L

HY-0157

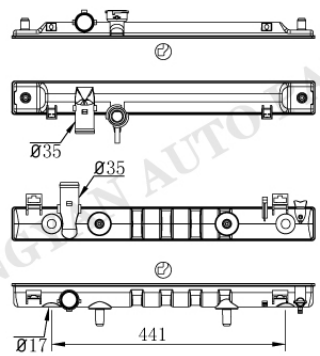

HY-0155AT/MT

Tank size :(R6×5×3.5×62×569)
OEM :
DPI :
NISSENS :
APPLICATION :
01-03 HYUNDAI TERRACAN 2.5L

HY-0157

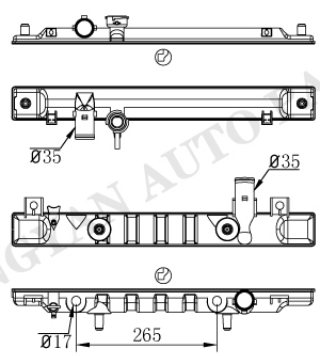

HY-0156AT/MT

Tank size :(R6×5×3.5×62×569)
OEM :
DPI :
NISSENS :
APPLICATION :
01-03 HYUNDAI TERRACAN 2.5L

HY-0158

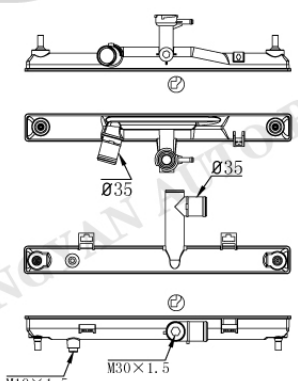

HY-0159

Tank size :(R6.5×5×3.6×50×500)
OEM :253101C600
DPI :
NISSENS :67512
APPLICATION :
06-09 HYUNDAI GETZ 1.5L(DIESEL)

HONGYAN AUTO PARTS

HY-0160

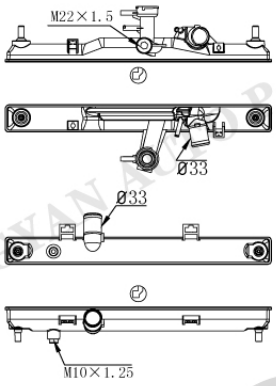

HY-0161

Tank size :(R6.5×5×3.6×50×500)
OEM :
DPI :
NISSENS :
APPLICATION :
03-09 HYUNDAI GETZ 1.5L(DIESEL)

HY-0162

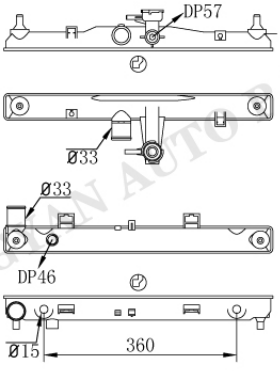

HY-0163AT/MT

Tank size :(R6.5×5×5×50×500.5)
OEM :253101C350 253101C356
DPI :
NISSENS :67487 67495 67496
APPLICATION :
02-09 HYUNDAI GETZ 1.1/1.3/1.5/1.6L

HY-0164

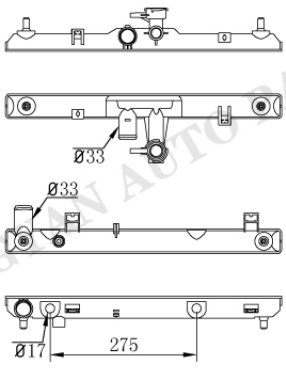

HY-0165AT/MT

Tank size :(R8.5×5×4×47×519)
OEM :
DPI :
NISSENS :
APPLICATION :
HYUNDAI

HY-0166AT/MT

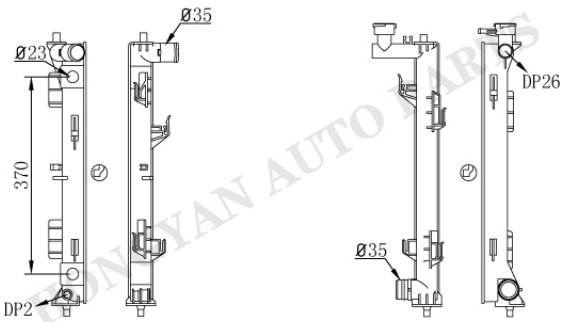

HY-0167

Tank size :(R8×5×4.5×46×490)
OEM :
DPI :
NISSENS :
APPLICATION :
15- HYUNDAI SONATA

HYUNDAI

HY-0168

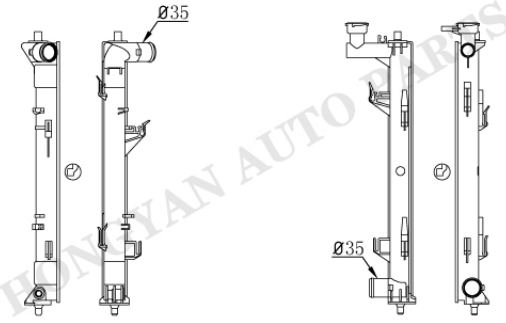

HY-0169

Tank size :(R6×5×4.5×46.5×490.5)
OEM :
DPI :
NISSENS :
APPLICATION :
15- HYUNDAI SONATA 2.4L

HY-0170AT/MT

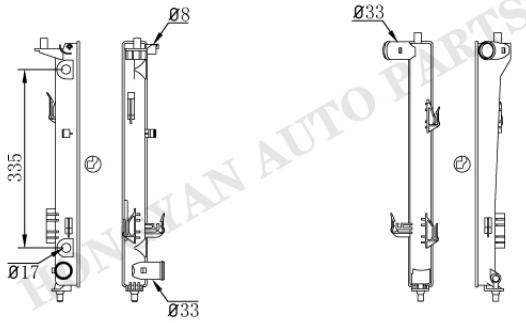

HY-0171

Tank size :(R6×5×4.5×46×461.5)
OEM :
DPI :
NISSENS :
APPLICATION :
HYUNDAI I30

HY-0170-1AT

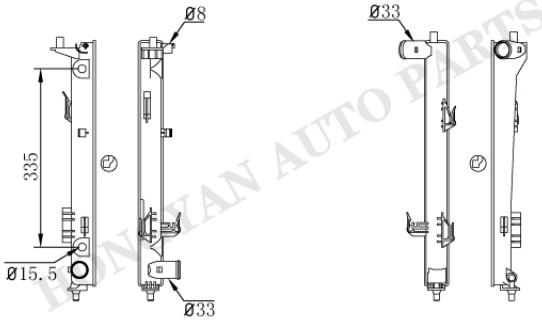

HY-0171

Tank size :(R6×5×4.5×46×461.5)
OEM :
DPI :
NISSENS :
APPLICATION :

HY-0172

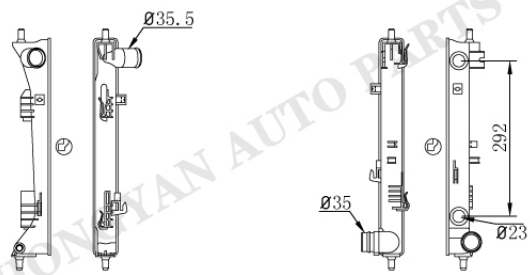

HY-0173AT/MT

Tank size :(R8×5×4.8×46.5×408)
OEM :
DPI :
NISSENS :
APPLICATION :
15- HYUNDAI VEROSTER

HONGYAN AUTO PARTS

HY-0174

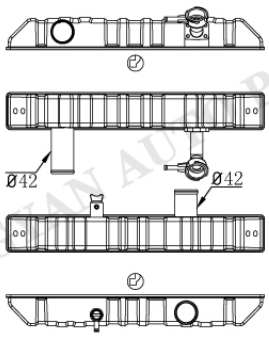

HY-0175

Tank size :(R8×5×5×69×485)
OEM :
DPI :
NISSENS :
APPLICATION :
HYUNDAI MINI BUS

HY-0176

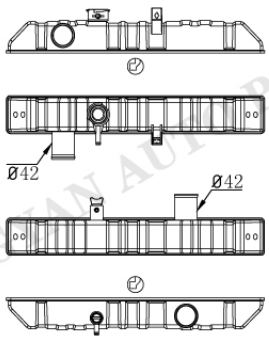

HY-0175

Tank size :(R8×5×5×69×485)
OEM :
DPI :
NISSENS :
APPLICATION :
HYUNDAI MINI BUS

HY-0177

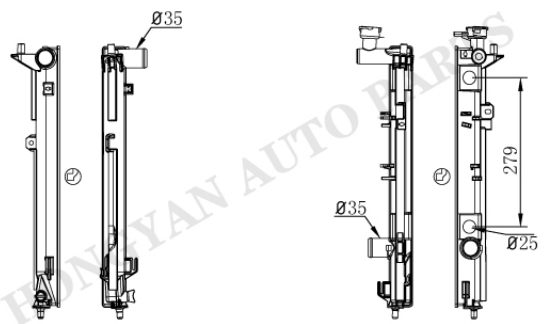

HY-0178AT/MT

Tank size :(R6.5×4.5×5×46.5×490.5)
OEM :25310B1140
DPI :13455
NISSENS :
APPLICATION :
15- HYUNDAI GENESIS 3.8L

HY-0179

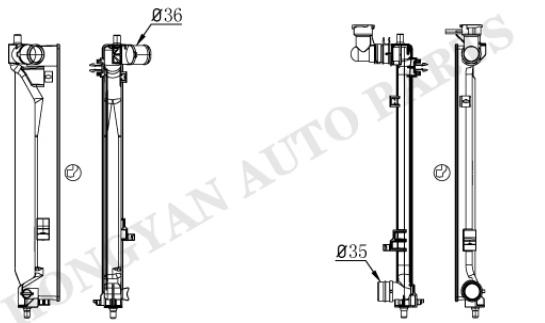

HY-0180

Tank size :(R9×4×4.5×40/31.5×483)
OEM :
DPI :
NISSENS :
APPLICATION :
15- HYUNDAI SONATA 2.4L

HYUNDAI

HY-0181AT/MT

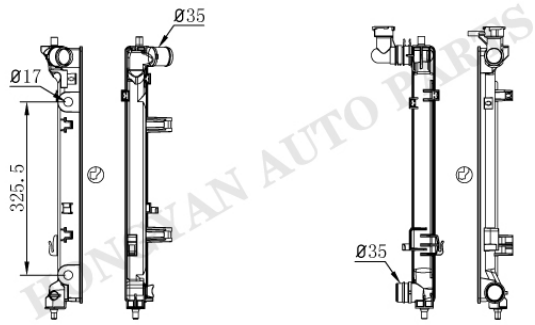

HY-0182

Tank size :(R9×4×4.5×44×483)
OEM :
DPI :
NISSENS :
APPLICATION :
15- HYUNDAI SONATA 2.0L T

HY-0183AT/MT

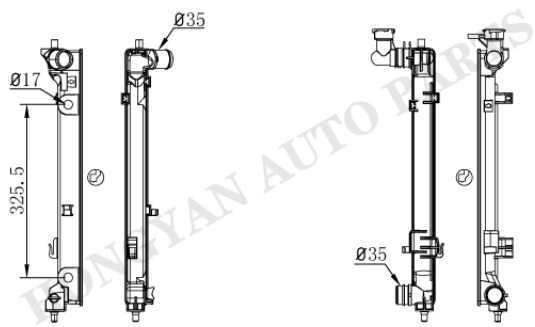

HY-0182

Tank size :(R9×4×4.5×44×483)
OEM :
DPI :
NISSENS :
APPLICATION :
15- HYUNDAI SONATA 1.6L

HY-0184AT/MT

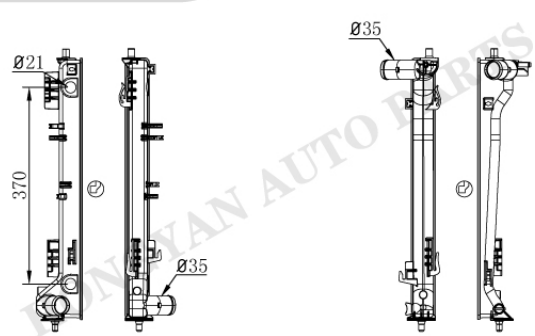

HY-0185

Tank size :(R8×5×4.5×46.5×492)
OEM :25310D3500
DPI :13576
NISSENS :
APPLICATION :
16- HYUNDAI TUCSON 2.0L

HY-0186AT/MT

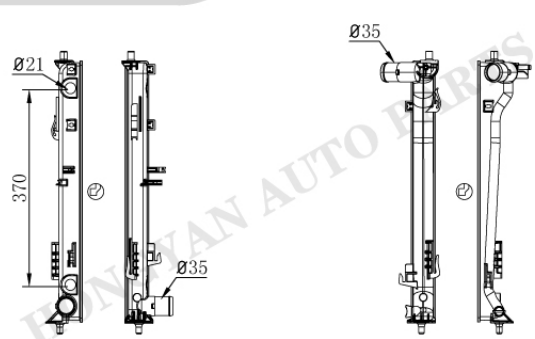

HY-0185

Tank size :(R8×5×4.5×46.5×492)
OEM :
DPI :
NISSENS :
APPLICATION :
16- HYUNDAI TUCSON 2.0L

HY-0187

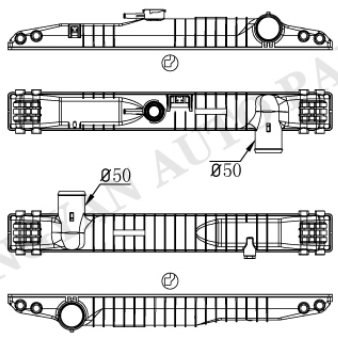

HY-0188

Tank size :(R7×5×5×70×610)
OEM :
DPI :
NISSENS :
APPLICATION :
HYUNDAI

HY-0189

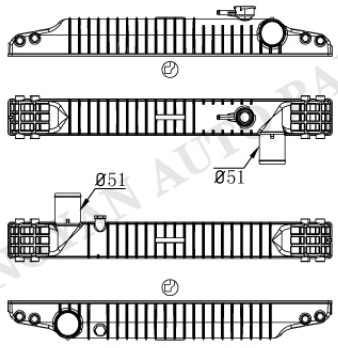

HY-0190

Tank size :(R7×5×5×70×610)
OEM :
DPI :
NISSENS :
APPLICATION :
HYUNDAI

HY-0191

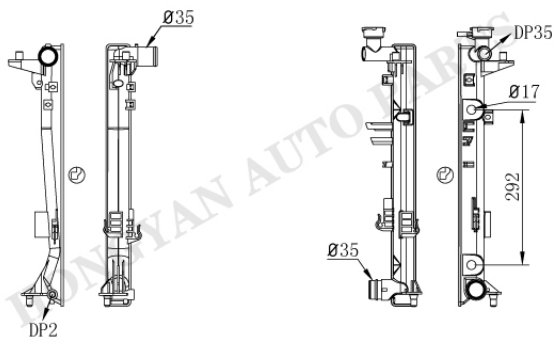

HY-0192AT/MT

Tank size :(R8×5×4.5×46.5×493)
OEM :253102M500
DPI :13420
NISSENS :
APPLICATION :
13-14 HYUNDAI GENESIS COUPE 2.0L

HY-0193

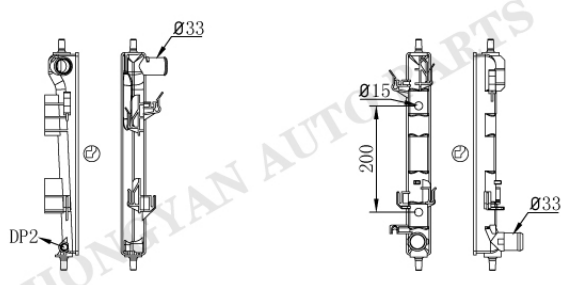

HY-0194AT/MT

Tank size : (R6.5×5×5×46.5×381)
OEM :25310B9000
DPI :
NISSENS :675024
APPLICATION :
13- HYUNDAI I10

HYUNDAI

HY-0193

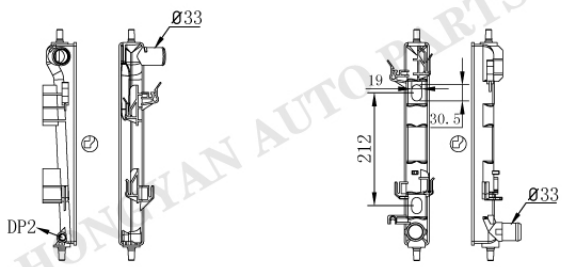

HY-0194-1AT

Tank size : (R6.5×5×5×46.5×381)
OEM :
DPI :
NISSENS :
APPLICATION :

HY-0195

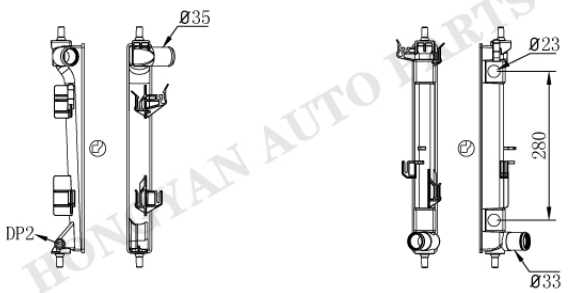

HY-0196AT/MT

Tank size : (R8×5×5×46.5×393.5)
OEM :
DPI :
NISSENS :
APPLICATION :
HYUNDAI

HY-0197AT/MT

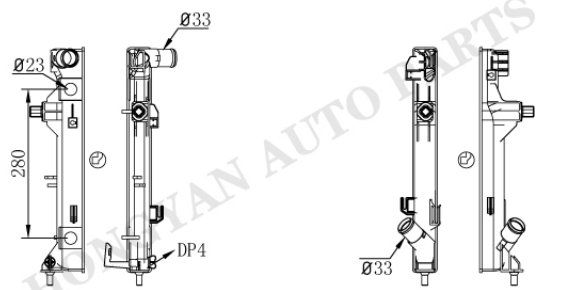

HY-0198

Tank size :(R6.5×5×4.7×46×423)
OEM :
DPI :
NISSENS :
APPLICATION :
17- HYUNDAI ELANTRA

HY-0075

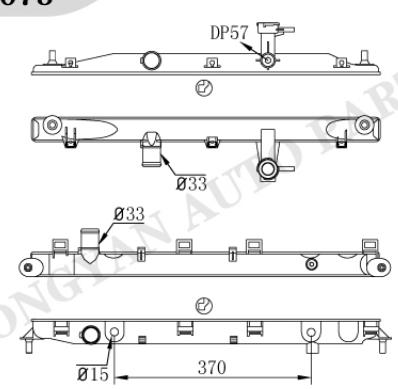

HY-0199AT/MT

Tank size :(R6×5×5×46.5×656)
OEM :2531010 253101E151
DPI :2896
NISSENS :67502 67509
APPLICATION :
06-11 HYUNDAI ACCENT 1.6L
06-10 DODGE ATTITUDE 1.4/1.6L

HY-31

HONGYAN AUTO PARTS

HY-0079-1AT/MT

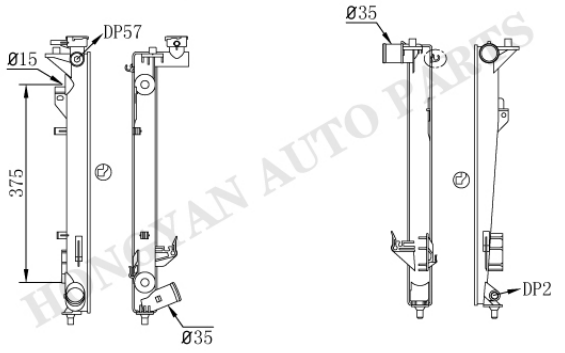

HY-0200

Tank size :(R8×5×4.5×46.3×490)
OEM : 253103K180/080
DPI :2831
NISSENS :67507 67508
APPLICATION :
07- SONATA 1.8L

HY-0201

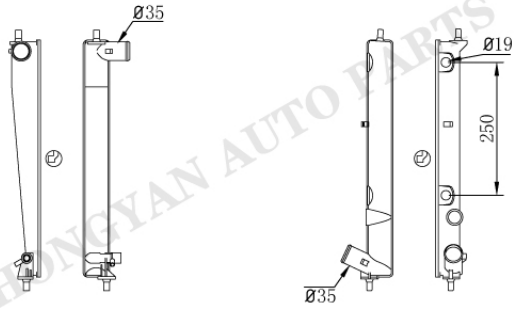

HY-0063AT/MT

Tank size :(R9×5×5×50×446)
OEM :
DPI :
NISSENS :
APPLICATION :
97- HYUNDAI H200 2.4/2.5L

HY-0062

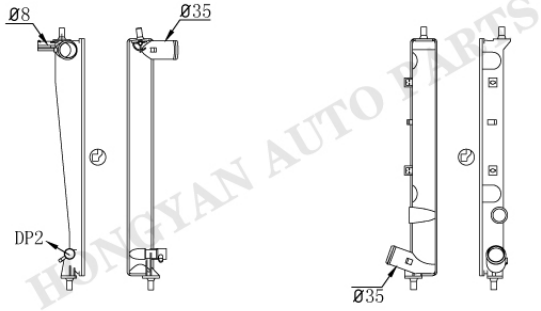

HY-0202

Tank size :(R9×5×5×50×446)
OEM :253104A000/100/150/050
DPI :
NISSENS :670381 67039 67040
APPLICATION :
97- HYUNDAI H200 2.4/2.5/2.6L(DIESEL)

HY-0203

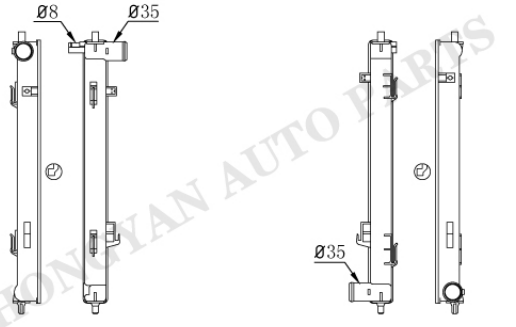

HY-0204

Tank size :(R8.5×4.5×5×46.5×495)
OEM :
DPI :
NISSENS :
APPLICATION :
瑞鷹S5

HONGYAN AUTO PARTS

HYUNDAI

HY-0205

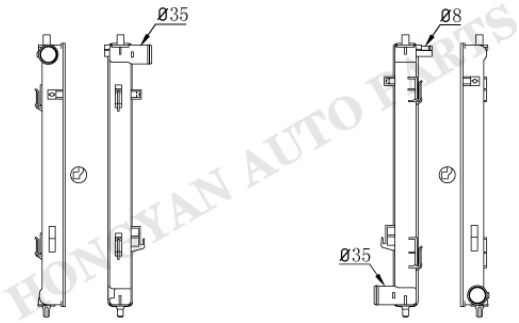

HY-0206

Tank size :(R8.5×4.5×5×46.5×495)
OEM :
DPI :
NISSENS :
APPLICATION :
瑞鹰S5

HY-0207AT/MT

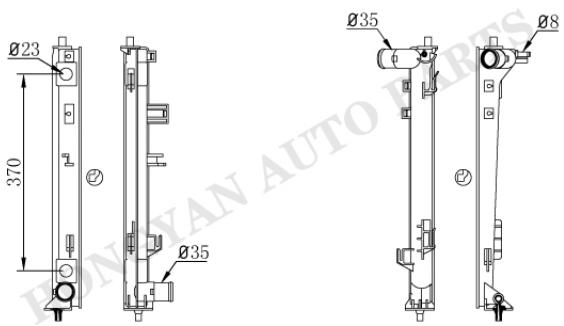

HY-0208

Tank size :(R6.5×5×4.8×46.5×490.5)
OEM :
DPI :
NISSENS :
APPLICATION :

HY-0209AT/MT

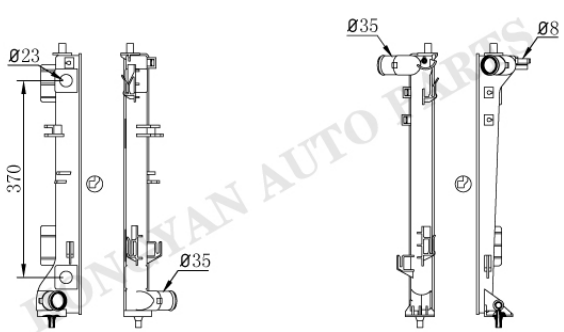

HY-0208

Tank size :(R6.5×5×4.8×46.5×490.5)
OEM :
DPI :
NISSENS :
APPLICATION :

HY-0210

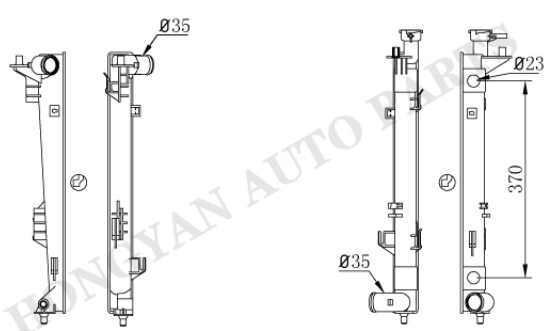

HY-0211AT/MT

Tank size :(R6×5×4.5×46.5×490.5)
OEM :
DPI :
NISSENS :
APPLICATION :

HY-33

HONGYAN AUTO PARTS

HYUNDAI

HY-0212

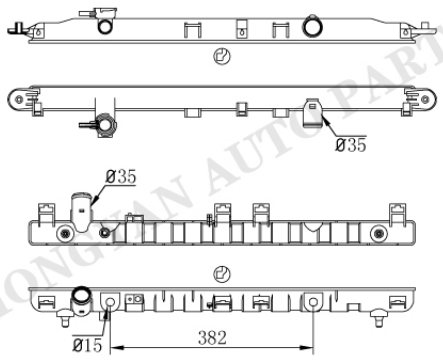

HY-0213AT/MT

Tank size :(R9×5×5×46.5×726.8)
OEM :
DPI :
NISSENS :
APPLICATION :
15- KIA OPIRUS

HY-0168

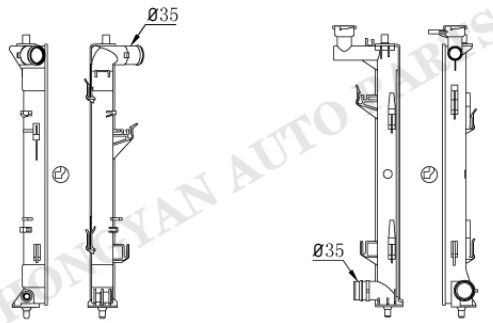

HY-0214

Tank size :(R6×5×4.5×46.5×490.5)
OEM :
DPI :
NISSENS :
APPLICATION :
K5 1.6L

HY-0143

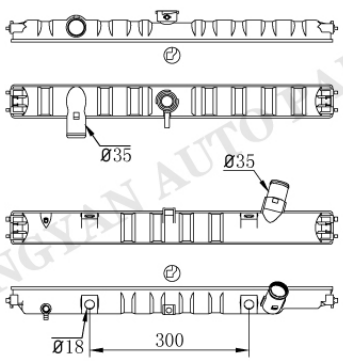

HY-0215AT/MT

Tank size :(R6.5×5×5×62.5×604.5)
OEM :HR171401 HR171501 HR171512
DPI :
NISSENS :67046 67047 67021
APPLICATION :
98- GALLOPER

HY-0216

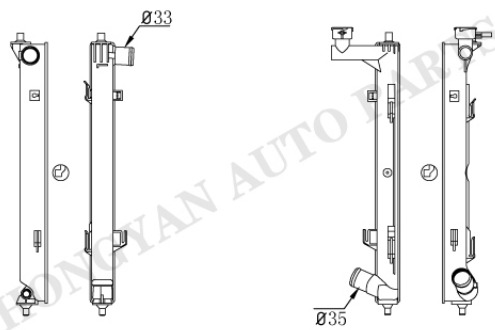

HY-0217

Tank size :(R6.5×5×4.5×46.5×490.5)
OEM :
DPI :
NISSENS :
APPLICATION :
13- MISTRA 1.6L

HONGYAN AUTO PARTS

HYUNDAI

HY-0218

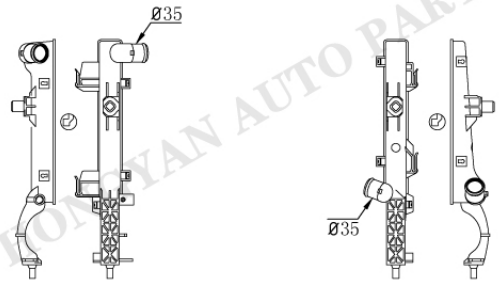

HY-0219

Tank size :(R6.5×5×5×46.5×310)
OEM :
DPI :
NISSENS :
APPLICATION :
16- ELANTRA 1.4L

HY-0053

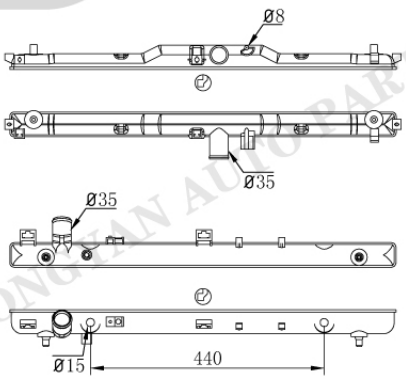

HY-0220AT/MT

Tank size :(R9×5×5×46.5×726.8)
OEM :
DPI :
NISSENS :
APPLICATION :

HY-0221AT/MT

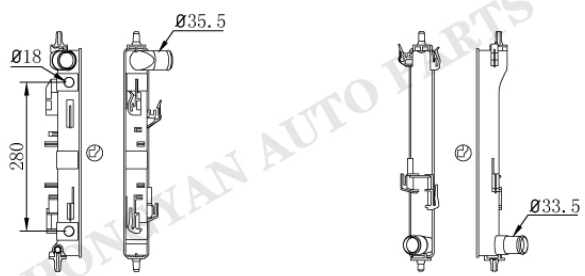

HY-0222

Tank size :(R8×5×4.5×46.5×392.5)
OEM :
DPI :
NISSENS :
APPLICATION :

HY-0223AT/MT

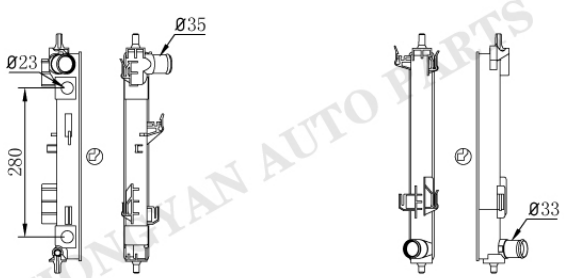

HY-0224

Tank size :(R8×5×4.5×46.5×392.5)
OEM :
DPI :
NISSENS :
APPLICATION :

HY-35

HONGYAN AUTO PARTS

HY-0225

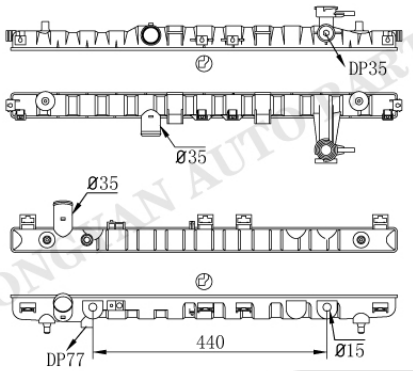

HY-0011AT/MT

Tank size :(R9×5×5×46.5×726.8)
OEM :
DPI :
NISSENS :
APPLICATION :
01-06 HYUNDAI SANTA FE 2.4/2.7L

HY-0226

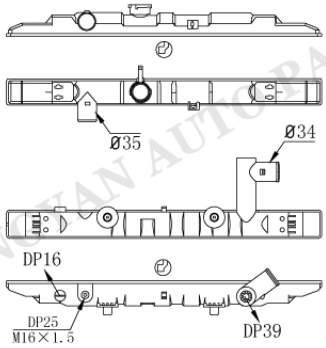

HY-0038

Tank size :(R6.5×5×5×53.5×592.5)
OEM :
DPI :
NISSENS :
APPLICATION :
97-01 HYUNDAI H-1 2.5L
93-00 HYUNDAI H100 2.5L
93-00 HYUNDAI H150 2.5L

HY-0227

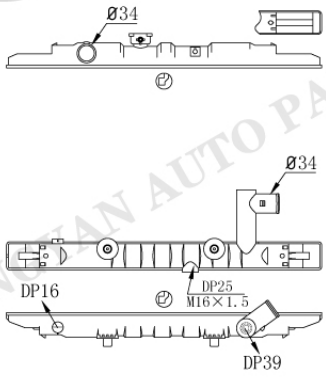

HY-0041

Tank size :(R6.5×5×5×53.5×592.5)
OEM :
DPI :
NISSENS :
APPLICATION :
93-00 HYUNDAI H100 2.4/2.5L
93-00 HYUNDAI H150 2.4/2.5L

HY-0228

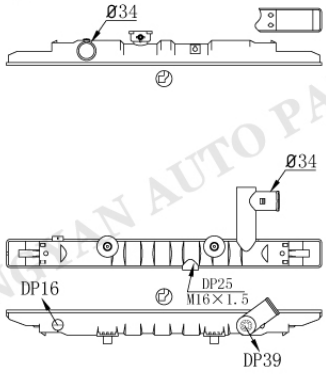

HY-0041

Tank size :(R6.5×5×5×53.5×592.5)
OEM :
DPI :
NISSENS :
APPLICATION :
93-00 HYUNDAI H100 2.4/2.5L
93-00 HYUNDAI H150 2.4/2.5L

HONGYAN AUTO PARTS

HYUNDAI

HY-0229

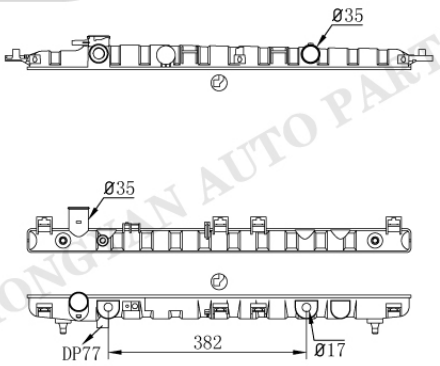

HY-0017AT/MT

Tank size :(R9×5×5×46.5×721.8)
OEM :
DPI :
NISSENS :
APPLICATION :
99-05 HYUNDAI SONATA 2.4/2.7L

HY-0230AT/MT

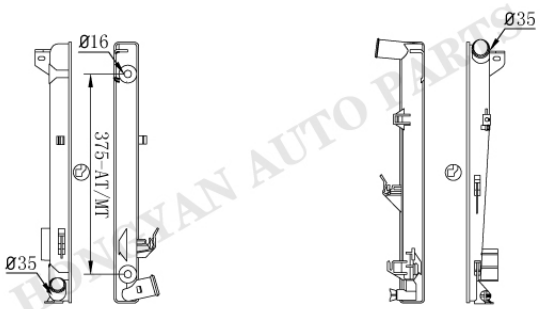

HY-0231

Tank size :(R7×5×5×46×490)
OEM :
DPI :
NISSENS :
APPLICATION :
(R7×5×5×46×490)

HY-0232

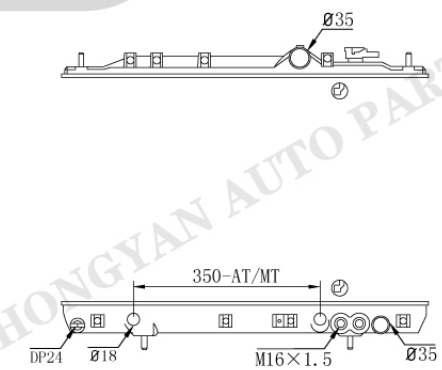

HY-0233AT/MT

Tank size :(R7×5×4×46×690)
OEM :
DPI :1399
NISSENS :
APPLICATION :
92-95 HYUNDAI ELANTRA 1.6/1.8L

HY-0234

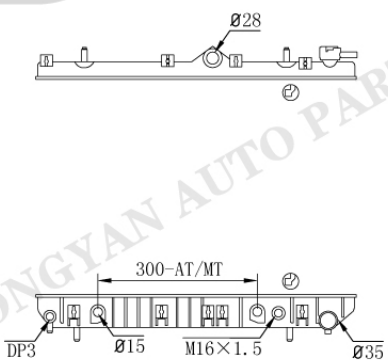

HY-0235AT/MT

Tank size :(R7×5×4×46/56×603)
OEM :
DPI :
NISSENS :
APPLICATION :
91-92 SCOUPE 1.5L

HONGYAN AUTO PARTS

HY-37

HY-0236

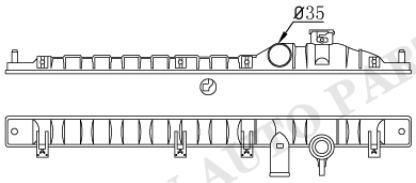

Tank size : (R6.5×5×5×46.2×763)
OEM :
DPI :
NISSENS :
APPLICATION :

Tank size :
OEM :
DPI :
NISSENS :
APPLICATION :

Tank size :
OEM :
DPI :
NISSENS :
APPLICATION :

Tank size :
OEM :
DPI :
NISSENS :
APPLICATION :

HONGYAN AUTO PARTS

	Tank size : OEM : DPI : NISSENS : APPLICATION :
	Tank size : OEM : DPI : NISSENS : APPLICATION :
	Tank size : OEM : DPI : NISSENS : APPLICATION :
	Tank size : OEM : DPI : NISSENS : APPLICATION :

HONGYAN AUTO PARTS

	Tank size : OEM : DPI : NISSENS : APPLICATION :
	Tank size : OEM : DPI : NISSENS : APPLICATION :
	Tank size : OEM : DPI : NISSENS : APPLICATION :
	Tank size : OEM : DPI : NISSENS : APPLICATION :

HONGYAN AUTO PARTS

ISUZU

IS-0001

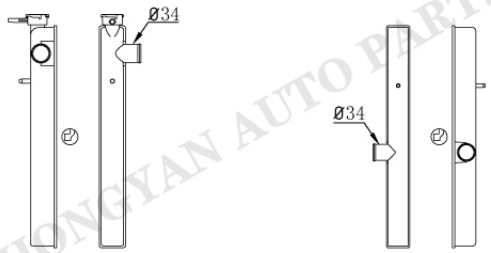

IS-0002

Tank size :(R4.5×3.5×5×49.5×417)
OEM :
DPI :
NISSENS :
APPLICATION :
89-98 ISUZU KB250/280 (DIESEL)

IS-0003

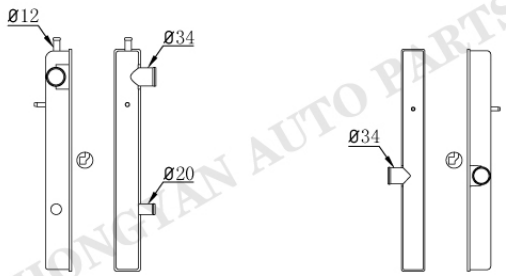

IS-0002

Tank size :(R4.5×3.5×5×49.5×417)
OEM :
DPI :
NISSENS :
APPLICATION :
89-98 ISUZU KB250/280 (DIESEL)

IS-0004

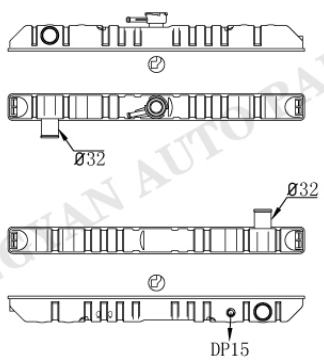

IS-0005

Tank size :(R7×5×5×50×557.5)
OEM :
DPI :
NISSENS :
APPLICATION :
89-93 ISUZU PICKUP 2.3L
89-93 ISUZU AMIGO 2.3L

IS-0006

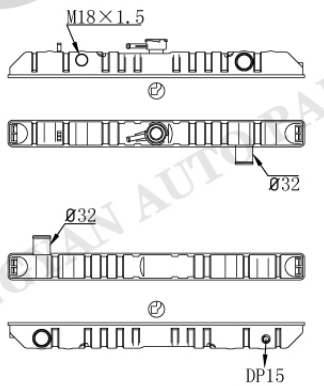

IS-0007

Tank size :(R7×5×5×50×557.5)
OEM :8943376981 8943628800/3
8944740491/2/3/4 8944740511
DPI :1127 1130
NISSENS :
APPLICATION :
86-91 ISUZU TROOPER 2.3/2.8L
89-93 ISUZU PICKUP 2.3L
89-93 ISUZU AMIGO 2.3L

HONGYAN AUTO PARTS

IS-0006

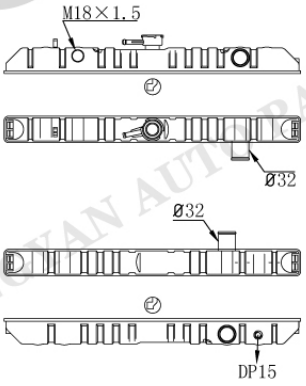

IS-0008

Tank size :(R7×5×5×50×557.5)
OEM :
DPI :
NISSENS :
APPLICATION :
89-93 ISUZU PICKUP 2.3L
89-93 ISUZU AMIGO 2.3L

IS-0009

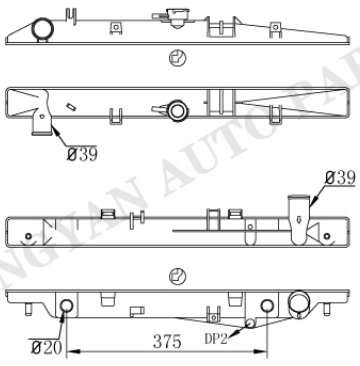

IS-0010AT/MT

Tank size :(R8×5×4×57×645.5)
OEM :8943752755/6
DPI :2357 2359
NISSENS :60852
APPLICATION :
98-02 ISUZU TROOPER 3.2L

IS-0011

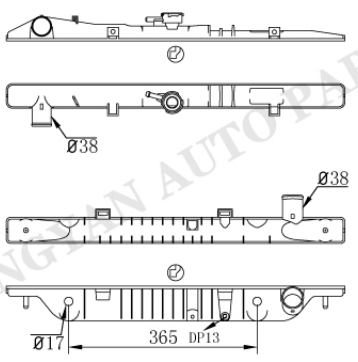

IS-0012AT/MT

Tank size :(R8.5×5×5×50×636)
OEM :8943752765 8943752766
DPI :8970369320/21/30/31/32/33
NISSENS :1302 1571
APPLICATION :
92-02 ISUZU TROOPER 3.2/3.5L
96-99 HONDA ACURA 3.2L

IS-0013

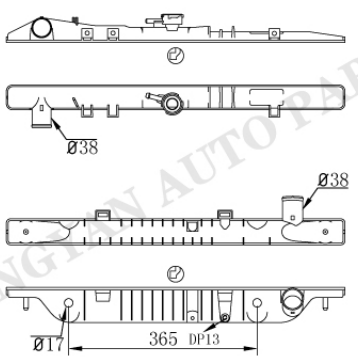

IS-0012AT/MT

Tank size :(R8.5×5×5×50×636)
OEM :
DPI :
NISSENS :
APPLICATION :
92-02 ISUZU TROOPER 3.2/3.5L
96-99 HONDA ACURA 3.2L

HONGTIAN AUTO PARTS

ISUZU

IS-0014

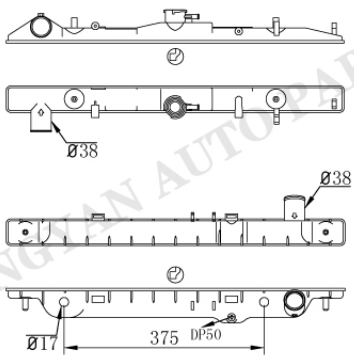

IS-0015AT/MT

Tank size :(R8.5×5×5×50×636)
OEM :8524781100/200 8524788110/20
8972095530/40 8973547650/60
DPI :2621 2195
NISSENS :
APPLICATION :
98-00 ISUZU AMIGO 3.2L
98-04 ISUZU RODEO 3.2/3.5L
98-02 HONDA PASSORT 3.2L

IS-0014

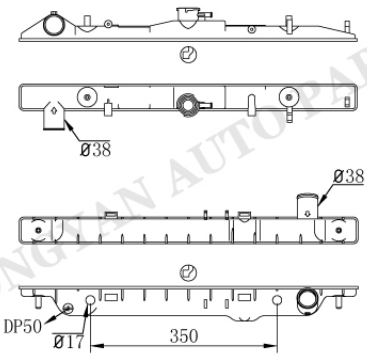

IS-0016AT/MT

Tank size :(R8.5×5×5×50×636)
OEM :8524788120 8971820640
DPI :2194 2445
NISSENS :
APPLICATION :
98-00 ISUZU AMIGO 2.2L
98-00 ISUZU RODEO 2.2L

IS-0017

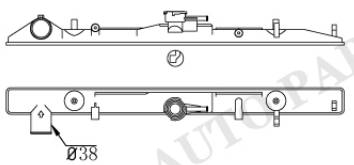

Tank size :(R8×5×4×52×636)
OEM :
DPI :
NISSENS :
APPLICATION :
02- ISUZU AMIGO

IS-0019

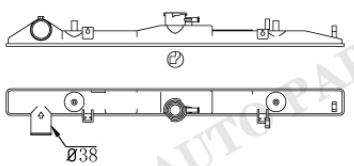

Tank size :(R8×5×4×52×636)
OEM :
DPI :
NISSENS :
APPLICATION :
02- ISUZU AMIGO

HONGYAN AUTOPARTS

IS-0021

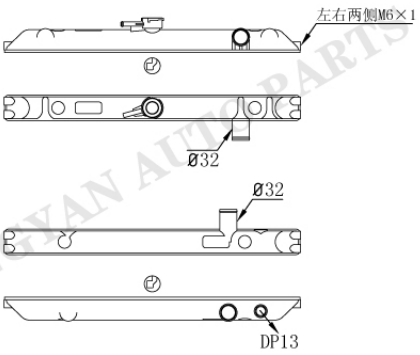

IS-0022

Tank size :(R8×5×5×48×556)
OEM :
DPI :
NISSENS :
APPLICATION :
ISUZU TFR(GAS)

IS-0023

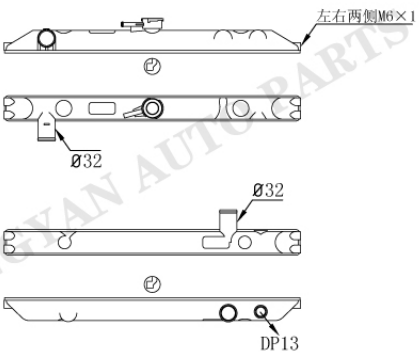

IS-0022

Tank size :(R8×5×5×48×556)
OEM :
DPI :
NISSENS :
APPLICATION :
ISUZU TFR(DIESEL)

IS-0024

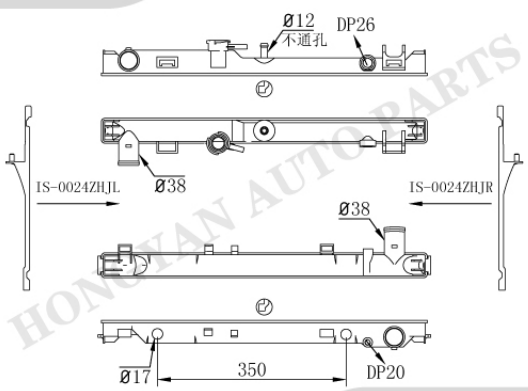

IS-0025AT/MT

Tank size :(R7×4.5×5×47.5×612.5)
OEM :8973333500/1/3
DPI :
NISSENS :60856
APPLICATION :
07-10 ISUZU D-MAX 3.0L
07-10 ISUZU RODEO 3.0L

IS-0026

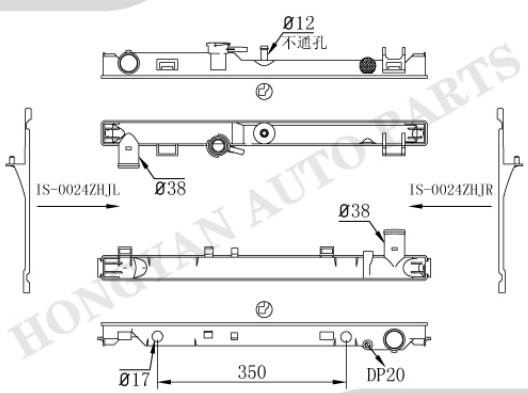

IS-0025AT/MT

Tank size :(R7×4.5×5×47.5×612.5)
OEM :
DPI :
NISSENS :
APPLICATION :
07-10 ISUZU D-MAX 3.0L
07-10 ISUZU RODEO 3.0L

ISUZU

IS-0027

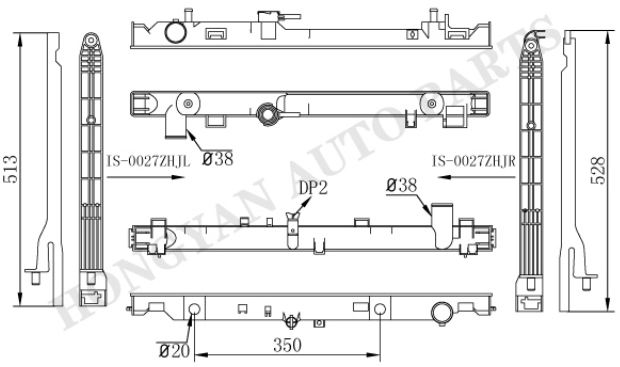

IS-0028AT/MT

Tank size :(R8.5×4.5×5×48×679)
OEM :
DPI :
NISSENS :
APPLICATION :
11-14 ISUZU D-MAX
11-14 ISUZU RODEO

IS-0027

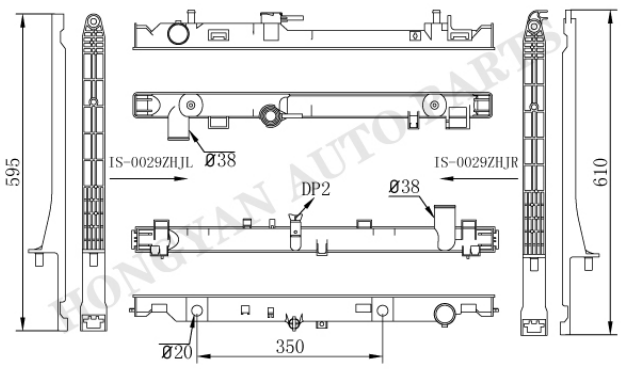

IS-0028AT/MT

Tank size :(R8.5×4.5×5×48×679)
OEM :
DPI :
NISSENS :
APPLICATION :
11-14 ISUZU D-MAX
11-14 ISUZU RODEO

IS-0030

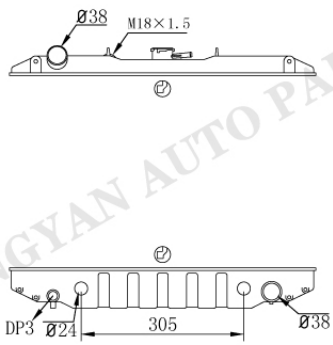

IS-0031AT/MT

Tank size :(R4.5×6×5×71×575)
OEM :
DPI :
NISSENS :
APPLICATION :
ISUZU

IS-0032

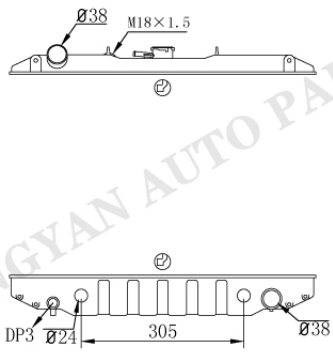

IS-0031AT/MT

Tank size :(R4.5×6×5×71×575)
OEM :
DPI :
NISSENS :
APPLICATION :
ISUZU

HONGYAN AUTO PARTS

IS-0030



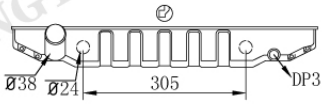

IS-0033AT/MT

Tank size :(R4.5×6×5×71×575)
OEM :
DPI :
NISSENS :
APPLICATION :
ISUZU

IS-0034

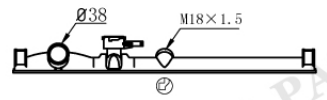

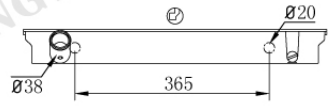

IS-0035AT/MT

Tank size :(R6.5×5×4×57×569)
OEM :
DPI :
NISSENS :
APPLICATION :
ISUZU NPR PICKUP

IS-0036

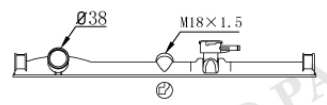

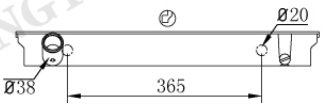

IS-0035AT/MT

Tank size :(R6.5×5×4×57×569)
OEM :
DPI :
NISSENS :
APPLICATION :
ISUZU NPR PICKUP

IS-0037

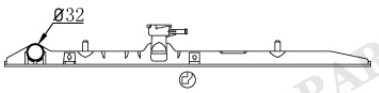

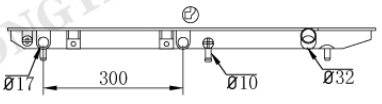

IS-0038AT/MT

Tank size :(R9×4.5×4.5×50×687.3)
OEM :8943168493/4/5 8943626395
8943446393/4/5 8943630913/4
DPI :1117 1122
NISSENS :
APPLICATION :
91-92 ISUZU IMPULSE 1.6L
91-93 ISUZU STYLUS 1.6L

HONGYAN AUTO PARTS

ISUZU

IS-0039



IS-0040AT/MT

Tank size :(R9.5×4.5×4.8×63.5×526)
OEM :
DPI :
NISSENS :
APPLICATION :
06- ISUZU RODEO 3.6L

IS-0041

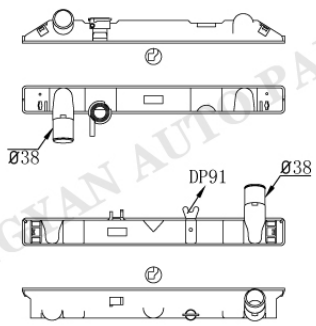

IS-0042

Tank size :(R8.5×5×4×52×493)
OEM :
DPI :
NISSENS :
APPLICATION :
99- ISUZU ELF

IS-0043

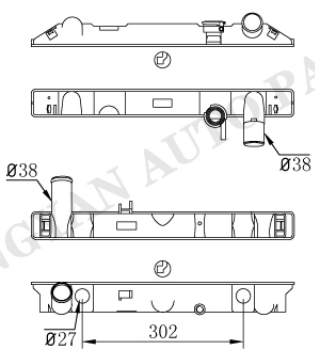

IS-0044AT/MT

Tank size :(R8.5×5×4×52×493)
OEM :
DPI :
NISSENS :
APPLICATION :
99- ISUZU ELF

IS-0045

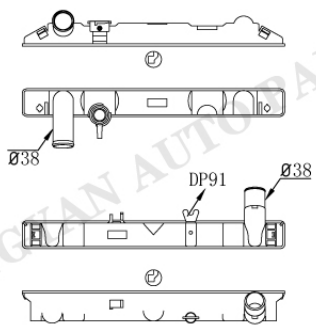

IS-0042

Tank size :(R8.5×5×4×52×493)
OEM :
DPI :
NISSENS :
APPLICATION :
99- ISUZU ELF

HONGYAN AUTO PARTS

IS-0046

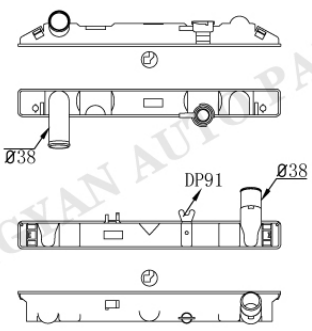

IS-0042

Tank size :(R8.5×5×4×52×493)
OEM :
DPI :
NISSENS :
APPLICATION :
99- ISUZU ELF

IS-0047

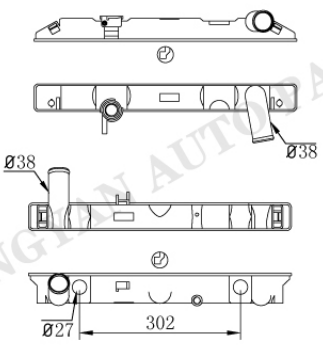

IS-0044AT/MT

Tank size :(R8.5×5×4×52×493)
OEM :
DPI :
NISSENS :
APPLICATION :
99- ISUZU ELF

IS-0048

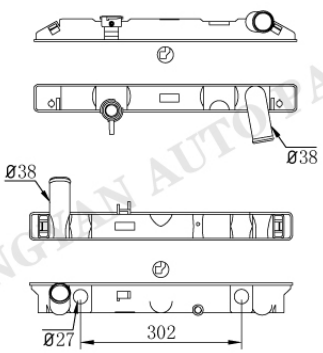

IS-0044AT/MT

Tank size :(R8.5×5×4×52×493)
OEM :
DPI :
NISSENS :
APPLICATION :
99- ISUZU ELF

IS-0049

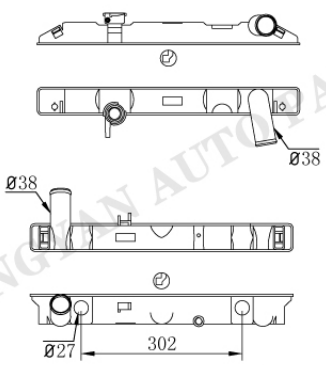

IS-0044AT/MT

Tank size :(R8.5×5×4×52×493)
OEM :
DPI :
NISSENS :
APPLICATION :
99- ISUZU ELF

HONGYAN AUTO PARTS

ISUZU

IS-0050

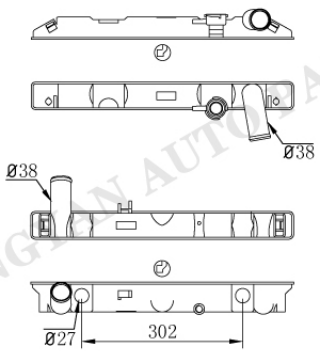

IS-0044AT/MT

Tank size :(R8.5×5×4×52×493)
OEM :
DPI :
NISSENS :
APPLICATION :
99- ISUZU ELF

IS-0051

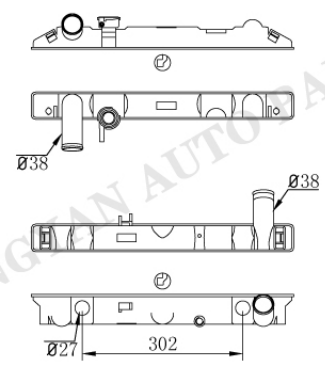

IS-0052AT/MT

Tank size :(R8.5×5×4×52×493)
OEM :
DPI :
NISSENS :
APPLICATION :
99- ISUZU ELF

IS-0053

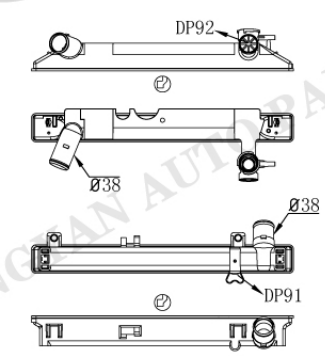

IS-0054

Tank size :(R8.5×5×4×53.4×492)
OEM :
DPI :
NISSENS :
APPLICATION :
ISUZU NHR

IS-0055

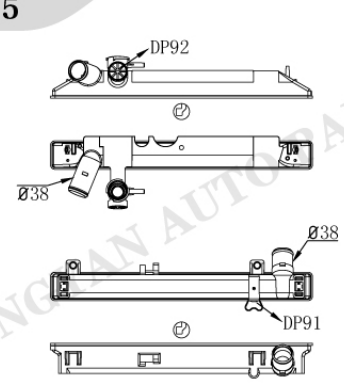

IS-0054

Tank size :(R8.5×5×4×53.4×492)
OEM :
DPI :
NISSENS :
APPLICATION :
ISUZU NHR

IS-9

HONGYAN AUTO PARTS

IS-0056

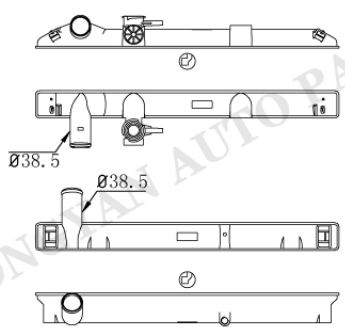

IS-0057

Tank size :(R8×5×4×52×570)
OEM :
DPI :
NISSENS :
APPLICATION :
ISUZU ELF

IS-0058

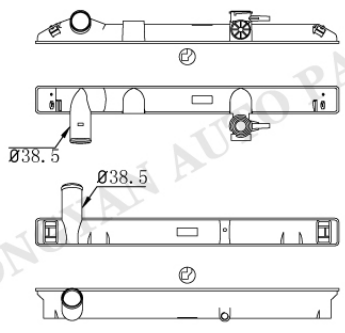

IS-0057

Tank size :(R8×5×4×52×570)
OEM :
DPI :
NISSENS :
APPLICATION :
ISUZU ELF

IS-0059

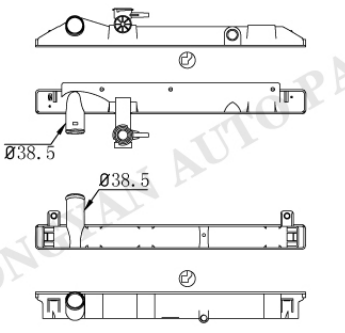

IS-0060

Tank size :(R8.5×5×4×52×570)
OEM :
DPI :
NISSENS :
APPLICATION :
ISUZU ELF

IS-0061

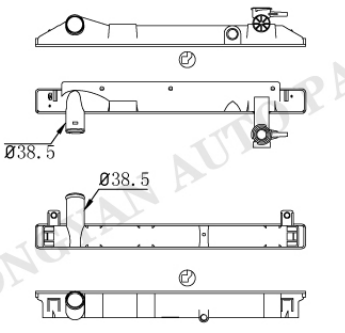

IS-0060

Tank size :(R8.5×5×4×52×570)
OEM :
DPI :
NISSENS :
APPLICATION :
ISUZU ELF

HONGKAN AUTO PARTS

ISUZU

IS-0062

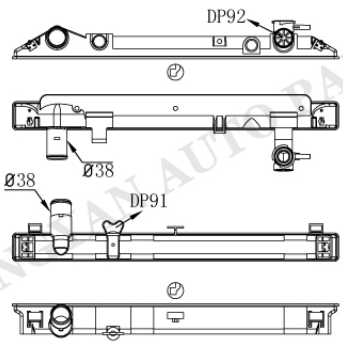

IS-0063

Tank size :(R8.5×5×4×53.4×613)
OEM :
DPI :
NISSENS :
APPLICATION :
09- ISUZU NPR

IS-0064

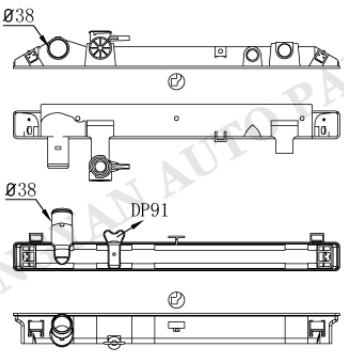

IS-0063

Tank size :(R8.5×5×4×53.4×613)
OEM :
DPI :
NISSENS :
APPLICATION :
09- ISUZU NPR

IS-0065

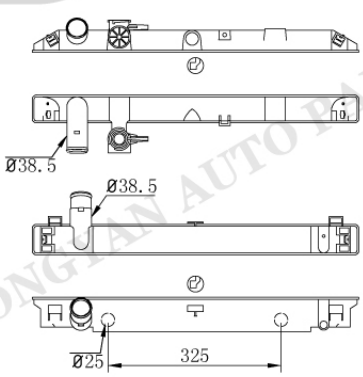

IS-0066AT/MT

Tank size :(R8×5×4×52/57×613)
OEM :
DPI :
NISSENS :
APPLICATION :
ISUZU ELF

IS-0067

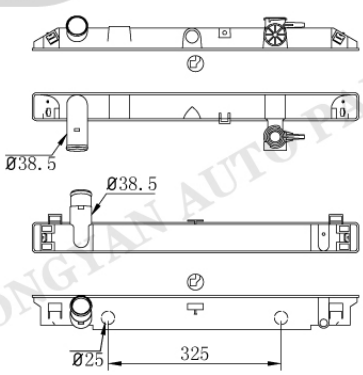

IS-0066AT/MT

Tank size :(R8×5×4×52/57×613)
OEM :
DPI :
NISSENS :
APPLICATION :
ISUZU ELF

HONGYAN AUTO PARTS

IS-11

IS-0068

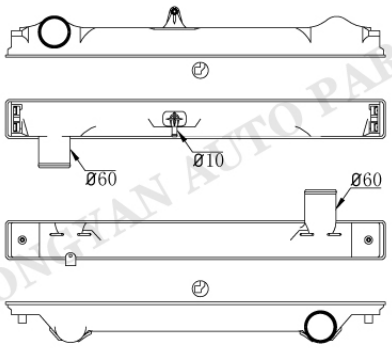

IS-0069

Tank size :(R8.5×5×4.5×75×731)
OEM :
DPI :
NISSENS :
APPLICATION :
00- ISUZU GIGA MAX

IS-0070

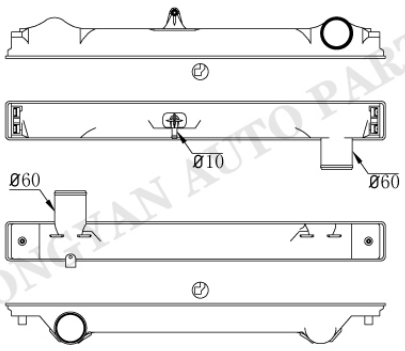

IS-0071

Tank size :(R8.5×5×4.5×75×731)
OEM :
DPI :
NISSENS :
APPLICATION :
00- ISUZU GIGA MAX

IS-0072

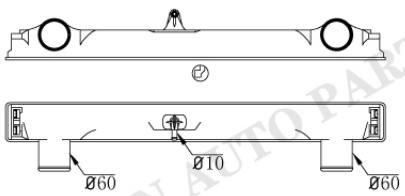

Tank size :(R8.5×5×4.5×75×731)
OEM :
DPI :
NISSENS :
APPLICATION :
00- ISUZU GIGA MAX

IS-0074

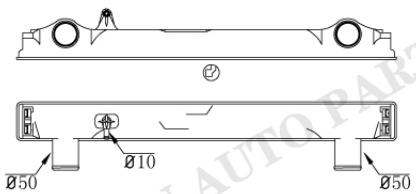

Tank size :(R8.5×5×4.5×75×731)
OEM :
DPI :
NISSENS :
APPLICATION :
00- ISUZU GIGA MAX

HONGYAN AUTO PARTS

ISUZU

IS-0076

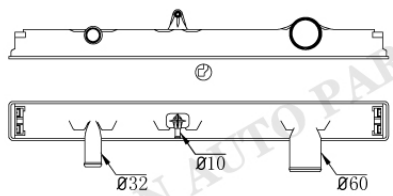

Tank size :(R8.5×5×4.5×75×731)
OEM :
DPI :
NISSENS :
APPLICATION :
00- ISUZU GIGA MAX

IS-0078

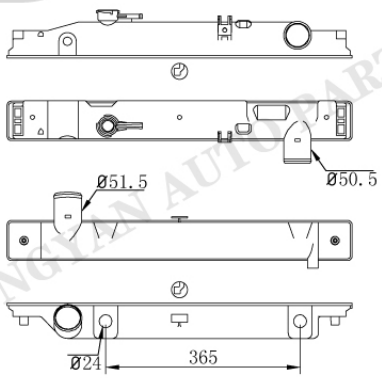

IS-0079AT/MT

Tank size :(R8×5×4.7×75×647.5)
OEM :
DPI :
NISSENS :
APPLICATION :

IS-0080

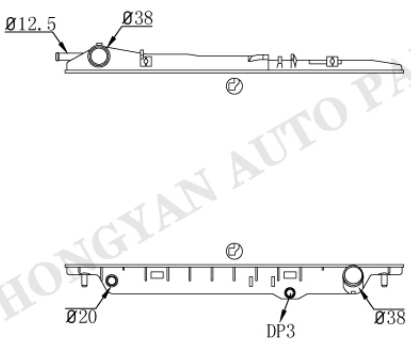

IS-0081

Tank size :(R8×5×5×50×636)
OEM :
DPI :
NISSENS :
APPLICATION :

IS-0082

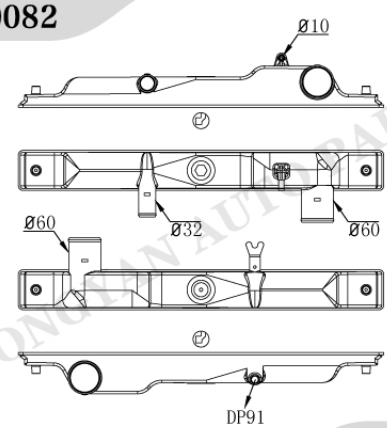

IS-0083

Tank size :(R9×5×4.5×75×686)
OEM :
DPI :
NISSENS :
APPLICATION :
ISUZU BUS

HONGYAN AUTO PARTS

IS-13

IS-0084

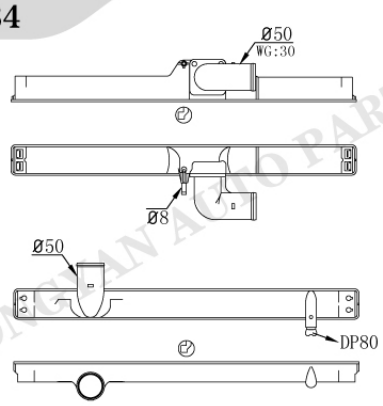

IS-0085

Tank size :(R8×5×4×57×648)
OEM :
DPI :
NISSENS :
APPLICATION :
ISUZU

IS-0086

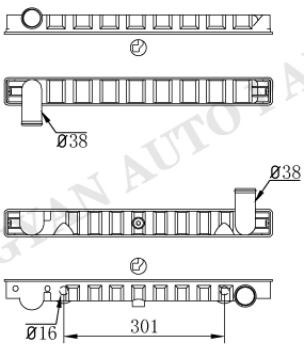

IS-0087AT/MT

Tank size :(R6×4.8×4×52×503)
OEM :
DPI :
NISSENS :
APPLICATION :
ISUZU

IS-0086

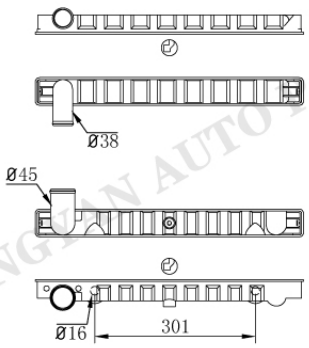

IS-0088AT/MT

Tank size :(R6×4.8×4×52×503)
OEM :
DPI :
NISSENS :
APPLICATION :
ISUZU

IS-0089

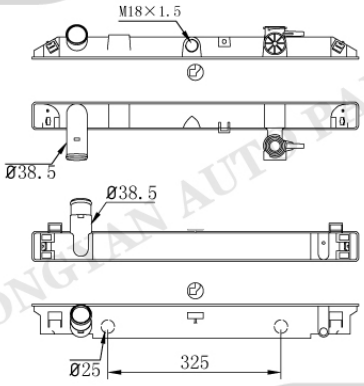

IS-0066AT/MT

Tank size :(R8×5×4×52/57×613)
OEM :
DPI :
NISSENS :
APPLICATION :
ISUZU ELF

HONGYAN AUTO PARTS

ISUZU

IS-0090

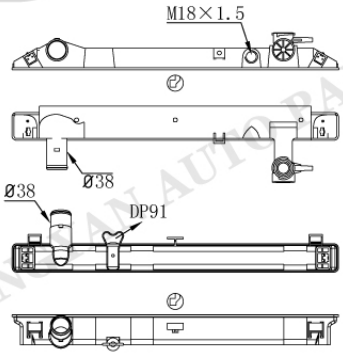

IS-0063

Tank size :(R8.5×5×4×53.4×613)
OEM :
DPI :
NISSENS :
APPLICATION :
09- ISUZU NPR

IS-0091

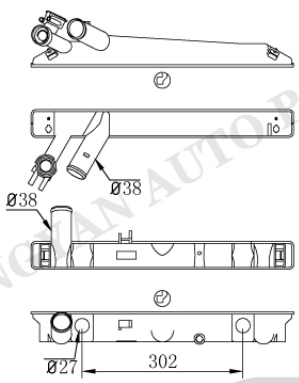

IS-0044AT/MT

Tank size :(R8.5×5×4×52×493)
OEM :8972403132
DPI :
NISSENS :
APPLICATION :
ISUZU ELF

IS-0092

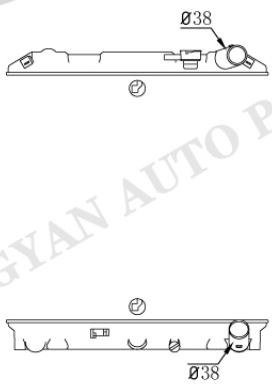

IS-0093

Tank size :(R8.5×5×5×63.5×492)
OEM :
DPI :
NISSENS :
APPLICATION :
ISUZU ELF

IS-0094

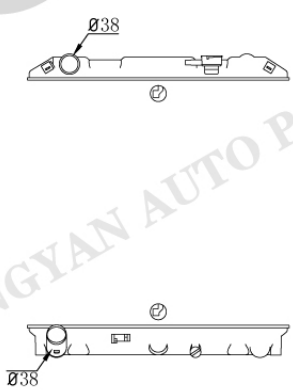

IS-0095

Tank size :(R8.5×5×5×63.5×492)
OEM :
DPI :
NISSENS :
APPLICATION :
ISUZU ELF

HONGYAN AUTO PARTS

IS-15

IS-0096

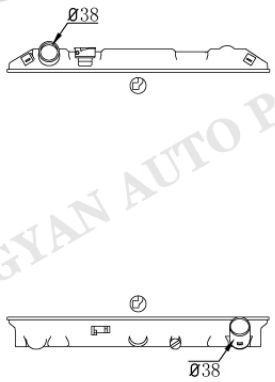

IS-0093

Tank size :(R8.5×5×5×63.5×492)
OEM :
DPI :
NISSENS :
APPLICATION :
ISUZU ELF

IS-0096

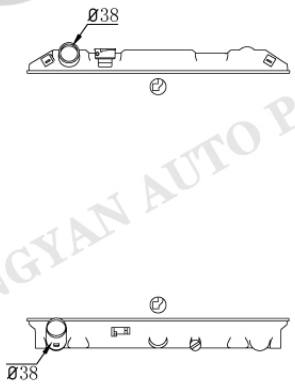

IS-0095

Tank size :(R8.5×5×5×63.5×492)
OEM :
DPI :
NISSENS :
APPLICATION :
ISUZU ELF

IS-0097

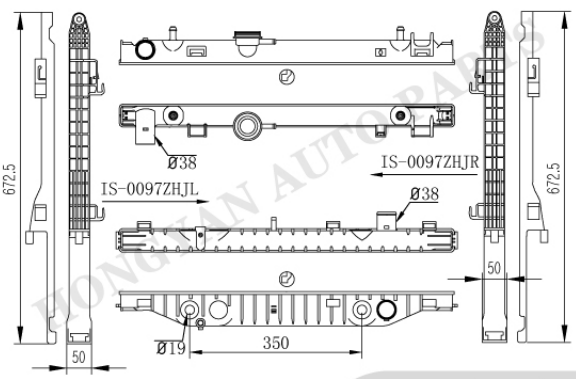

IS-0098AT/MT

Tank size :(R8×4.5×5.5×48×680)
OEM :
DPI :
NISSENS :
APPLICATION :
15- ISUZU D-MAX

IS-0097

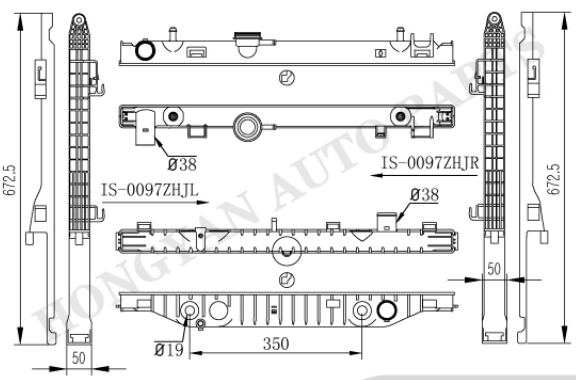

IS-0099AT/MT

Tank size :(R8×4.5×5.5×48×680)
OEM :
DPI :
NISSENS :
APPLICATION :
15- ISUZU D-MAX

HONGYAN AUTO PARTS

ISUZU

IS-0100

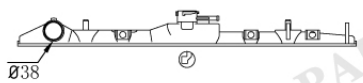

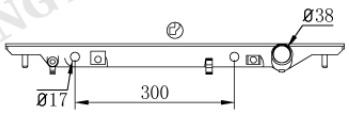

IS-0101AT/MT

Tank size :(R10.5×5×5×50×637)
OEM :
DPI :
NISSENS :
APPLICATION :
98-04 ISUZU AXIOM

IS-0102

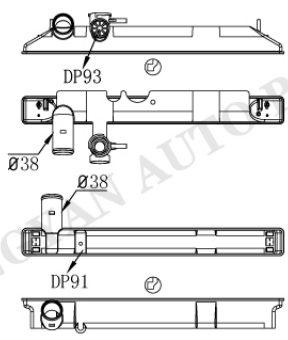

IS-0103

Tank size :(R8.5×5×4×52×493)
OEM :
DPI :
NISSENS :
APPLICATION :
ISUZU

IS-0104

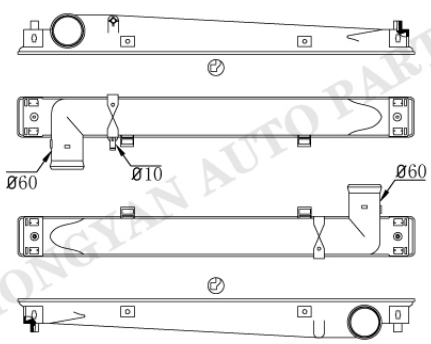

IS-0105

Tank size :(R8.5×5×4.8×75×745.5)
OEM :1214109323
DPI :
NISSENS :
APPLICATION :
GXZ GIGA

IS-0106

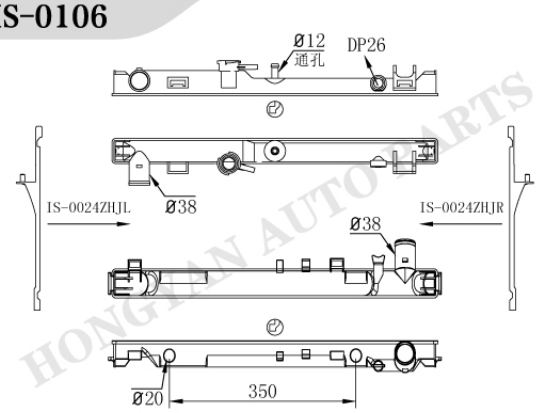

IS-0107AT/MT

Tank size :(R7×4.5×5×47.5×612.5)
OEM :
DPI :
NISSENS :
APPLICATION :
07-10 ISUZU D-MAX 3.0L
07-10 ISUZU RODEO 3.0L

HONGYAN AUTO PARTS

IS-0108 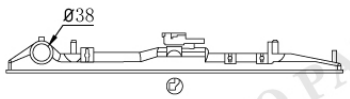 	Tank size :(R9×5×4.5×50×632) OEM : DPI : NISSENS : APPLICATION :
IS-0110 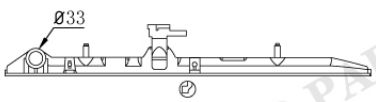 	Tank size :(R8.5×4.5×4.5×40×686.5) OEM : DPI :1300 NISSENS : APPLICATION : 92- ISUZU IMPULSE 1.8L 92- ISUZU STYLUS 1.8L
	Tank size : OEM : DPI : NISSENS : APPLICATION :
	Tank size : OEM : DPI : NISSENS : APPLICATION :

HONGYAN AUTO PARTS

	Tank size : OEM : DPI : NISSENS : APPLICATION :
	Tank size : OEM : DPI : NISSENS : APPLICATION :
	Tank size : OEM : DPI : NISSENS : APPLICATION :
	Tank size : OEM : DPI : NISSENS : APPLICATION :

HONGYAN AUTO PARTS

IV-0001

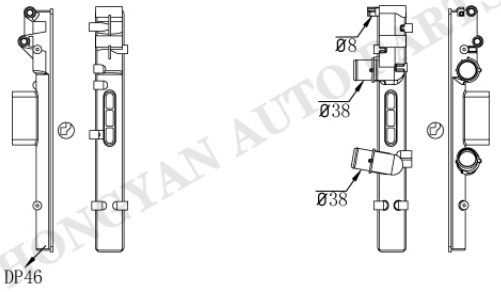

IV-0002

Tank size :(R9.5×4.5×4.5×53.5×456)
OEM :500303392 500396428/9
DPI :
NISSENS :61985
APPLICATION :
99- IVECO DAILY

IV-0003

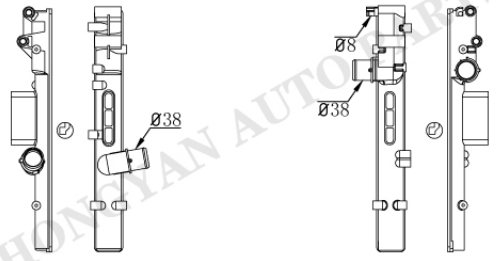

IV-0004

Tank size :(R9.5×4.5×4.5×53.5×456)
OEM :504045489 504084141
DPI :
NISSENS :61981
APPLICATION :
99- IVECO DAILY

IV-0005



IV-0006

Tank size :(R6.5×4.5×5×63×446)
OEM :93818439 93822628/82
DPI :
NISSENS :61975
APPLICATION :
96- IVECO DAILY

IV-0005



IV-0007

Tank size :(R6.5×4.5×5×63×446)
OEM :
DPI :
NISSENS :
APPLICATION :
96- IVECO DAILY

HONGYAN AUTO PARTS

IVECO

IV-0008



IV-0009

Tank size :(R6.5×4.5×5×63×448.5)
OEM :
DPI :
NISSENS :
APPLICATION :
96- IVECO DAILY

IV-0008



IV-0010

Tank size :(R6.5×4.5×5×63×448.5)
OEM :
DPI :
NISSENS :
APPLICATION :
96- IVECO DAILY

IV-0011

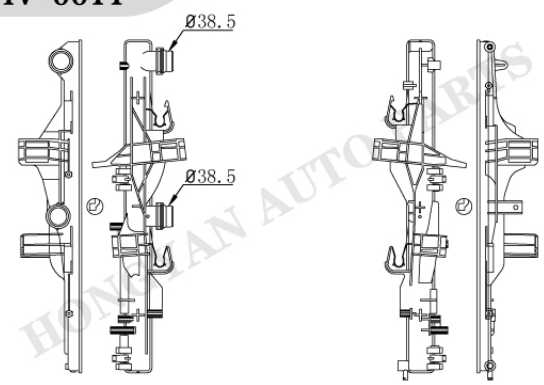

IV-0012

Tank size :(R9×4.5×5×52×625)
OEM :
DPI :
NISSENS :
APPLICATION :

IV-0013

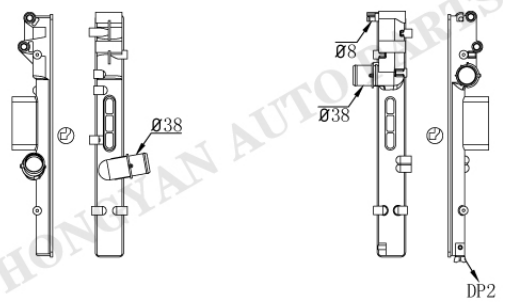

IV-0014

Tank size :(R9.5×4.5×4.5×53.5×456)
OEM :
DPI :
NISSENS :
APPLICATION :

HONGYAN AUTO PARTS

IV-2

IV-0015

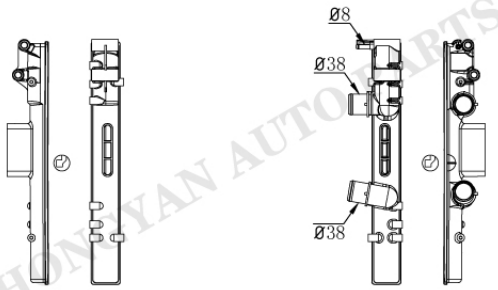

IV-0016

Tank size :(R5.5×4×5.3×55×457)
OEM :
DPI :
NISSENS :
APPLICATION :
99- IVECO DAILY

IV-0017

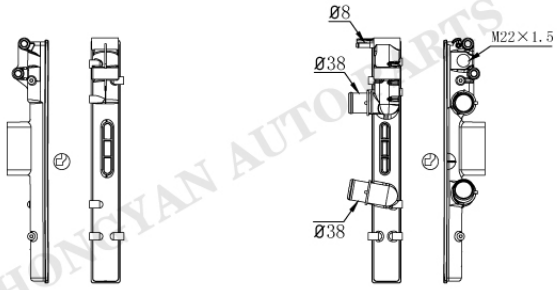

IV-0018

Tank size :(R5.5×4×5.3×55×457)
OEM :
DPI :
NISSENS :
APPLICATION :
99- IVECO DAILY

IV-0019

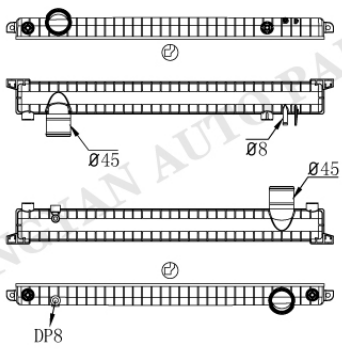

IV-0020

Tank size :(R5.5×4.5×5×61×580)
OEM :504289350
DPI :
NISSENS :61967
APPLICATION :
01- IVECO EUROCARGO E18/21/22/24/25/28 (DIESEL)

IV-0021

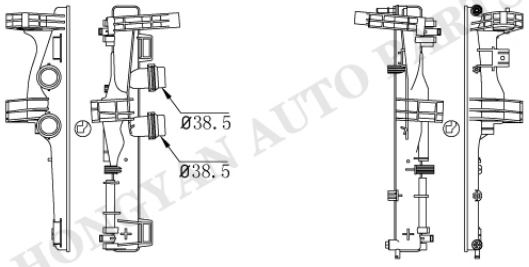

IV-0022

Tank size :(R9×4.5×5×52×461.5)
OEM :
DPI :
NISSENS :
APPLICATION :

HONGYAN AUTO PARTS

IVECO

	Tank size : OEM : DPI : NISSENS : APPLICATION :
	Tank size : OEM : DPI : NISSENS : APPLICATION :
	Tank size : OEM : DPI : NISSENS : APPLICATION :
	Tank size : OEM : DPI : NISSENS : APPLICATION :

HONGYAN AUTO PARTS

JAGUAR

JA-0001AT/MT

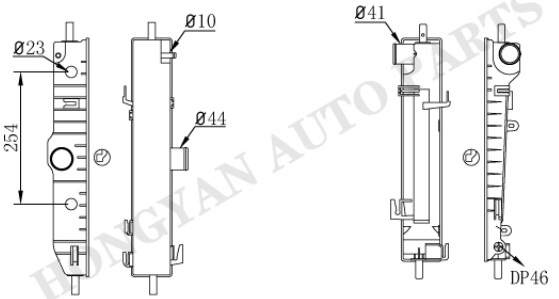

JA-0002

Tank size :(R6.5×5×5×81.5×447.5)
OEM :MJB4190AD/AE/AF
DPI :2567
NISSENS :66701
APPLICATION :
98-07 JAGUAR XK8 4.0L

JA-0003AT/MT

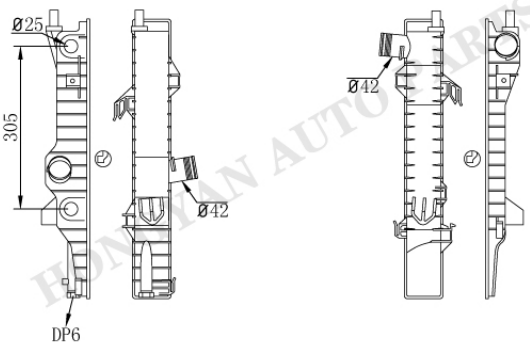

JA-0004

Tank size :(R6.5×5×5×72.5×524.5)
OEM :C2C1448 C2C36506 XR847964
DPI :13148
NISSENS :66708
APPLICATION :
00-08 JAGUAR S-TYPE 3.0L
04-09 JAGUAR VANDEN PLAS 3.0L
08-15 JAGUAR XF 3.0L
03-15 JAGUAR XJ6 3.0L

JA-0005

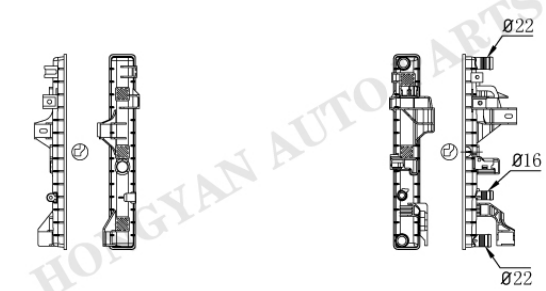

JA-0006

Tank size :(R7×5×5.3×49×366)
OEM :
DPI :
NISSENS :
APPLICATION :
JAGUAR

JA-0005

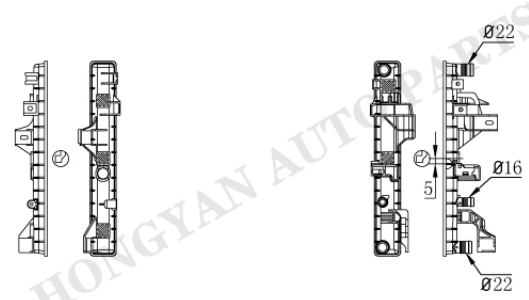

JA-0006-1

Tank size :(R7×5×5.3×49×366)
OEM :
DPI :
NISSENS :
APPLICATION :
JAGUAR

HONGYAN AUTO PARTS

JAGUAR

JA-0007

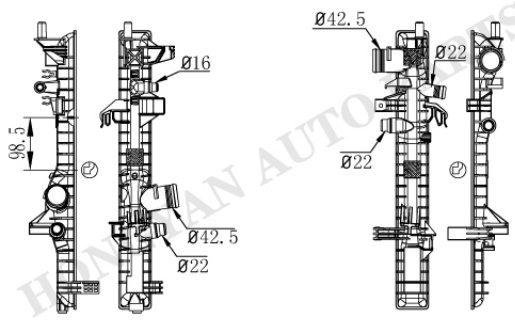

JA-0008

Tank size :(R6.5×5×5×63.5×524)
OEM :
DPI :
NISSENS :
APPLICATION :
JAGUAR 3.0L

JA-0009

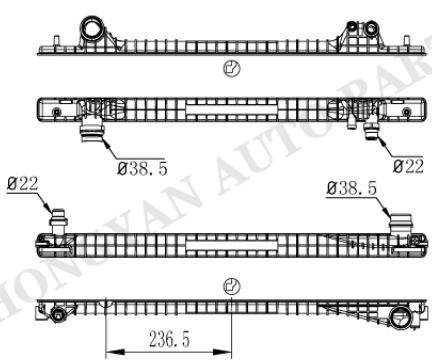

JA-0010

Tank size :(R9×4.5×4×43.5×732)
OEM :
DPI :
NISSENS :
APPLICATION :
JAGUAR F-PACE XFL/XE

JA-0011

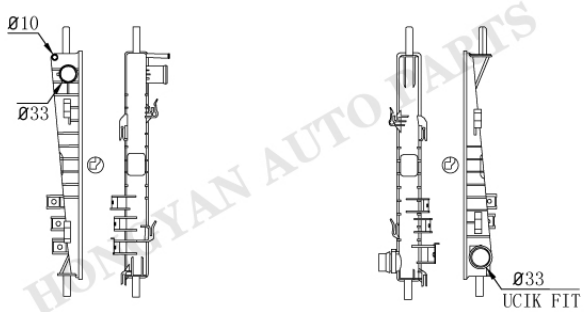

JA-0012

Tank size :(R6.5×5×5×45.6×430)
OEM :
DPI :2622
NISSENS :
APPLICATION :
02-08 JAGUAR X-TYPE 2.5/3.0L

JA-0013

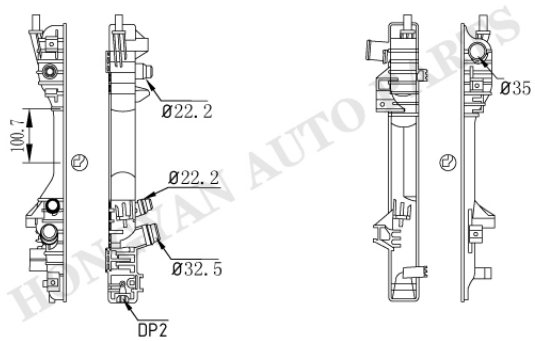

JA-0014

Tank size :(R6.5×5×5.2×63.2×523)
OEM :
DPI :
NISSENS :
APPLICATION :

JA-2

	Tank size : OEM : DPI : NISSENS : APPLICATION :
	Tank size : OEM : DPI : NISSENS : APPLICATION :
	Tank size : OEM : DPI : NISSENS : APPLICATION :
	Tank size : OEM : DPI : NISSENS : APPLICATION :

HONGYAN AUTO PARTS

KIA

KI-0001

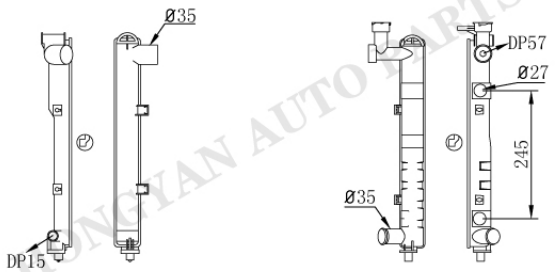

KI-0002AT/MT

Tank size :(R6.5×5×5×49.5×392)
OEM :0K9B015200 0K9B015200
DPI :
NISSENS :66615 66616
APPLICATION :
96-03 KIA CLARUS 1.8/2.0L
96-01 KIA CREDOS 1.8/2.0L

KI-0001

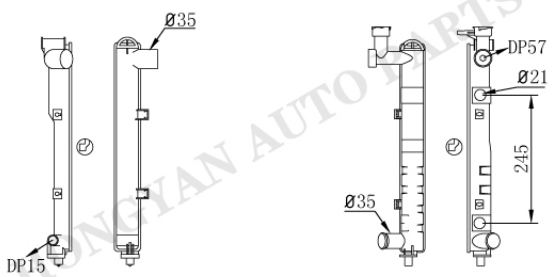

KI-0002-1AT

Tank size :(R6.5×5×5×49.5×392)
OEM OK9B015200
DPI :
NISSENS :66615 66616
APPLICATION :
96-03 KIA CLARUS 1.8/2.0L
96-01 KIA CREDOS 1.8/2.0L

KI-0003

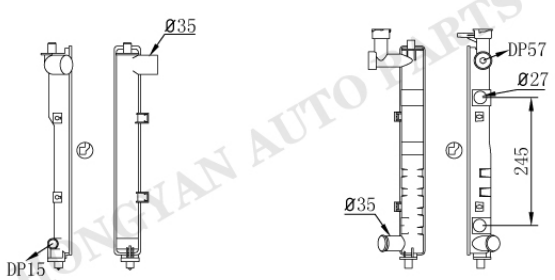

KI-0004AT/MT

Tank size :(R6.5×5×5×49.5×392)
OEM :0K9A215200
DPI :
NISSENS :66656
APPLICATION :
96-03 KIA CLARUS 1.8/2.0L
96-01 KIA CREDOS 1.8/2.0L

KI-0003

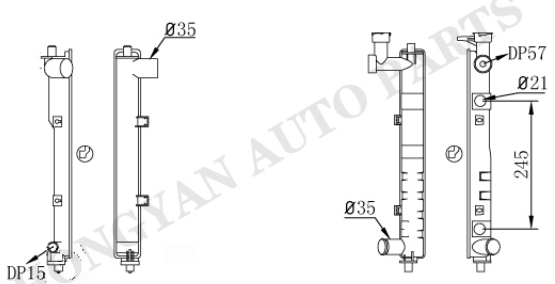

KI-0004-1AT

Tank size :(R6.5×5×5×49.5×392)
OEM :0K9A215200
DPI :
NISSENS :66656
APPLICATION :
96-03 KIA CLARUS 1.8/2.0L
96-01 KIA CREDOS 1.8/2.0L

RONGYAN AUTO PARTS

KI-0005

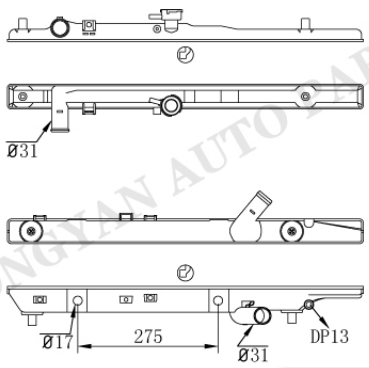

KI-0006AT/MT

Tank size :(R8×5×4×47×669)
OEM :0K20115200AB/B 0K20415200AB
DPI :2056
NISSENS :66602 66603
APPLICATION :
95-97 KIA SEPHIA 1.6/1.8L

KI-0007

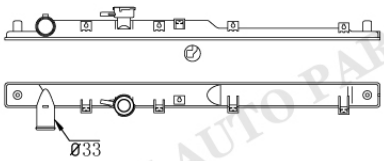

Tank size :(R6×4×5×46.5×705.5)
OEM :0K2A115200/B K2A115200
DPI :
NISSENS :66604
APPLICATION :
96-01 KIA SEPHIA 1.6L
96-01 KIA MENTOR 1.6L

KI-0009

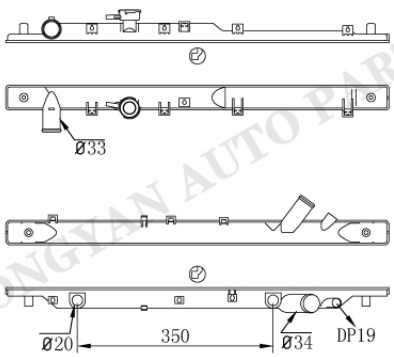

KI-0010AT/MT

Tank size :(R6×5×5×46.5×720)
OEM :0K24215200A/B/E 0K2A11520XA
0K2A615200C/G/J
DPI :2269 2441
NISSENS :
APPLICATION :
98-01 KIA SEPHIA 1.8L
00-04 KIA SPECTRA 1.8L

KI-0011

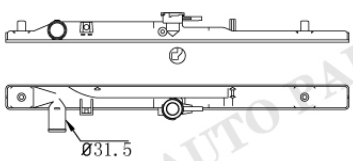

Tank size :(R8×5×4.5×47×645)
OEM :0K20115200B
DPI :
NISSENS :63390
APPLICATION :
93-97 KIA SEPHIA 1.5L
93-97 KIA MENTOR 1.5L

HONGYAN AUTO PARTS

KIA

KI-0013

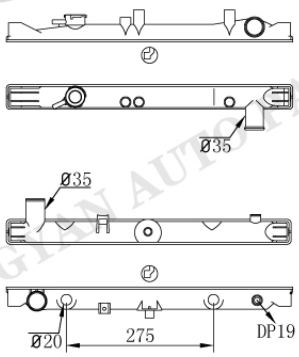

KI-0014AT/MT

Tank size :(R8×5×4×46.5×538)
OEM :0K01115200A 0K01215200
0K01215200A 0K01515200A
DPI :2057
NISSENS :66642 66607
APPLICATION :
95-01 KIA SPORTAGE 2.0L

KI-0015

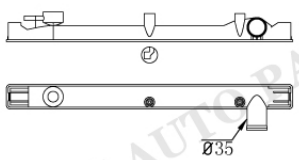

Tank size :(R8×5×4×46.5×538)
OEM :
DPI :
NISSENS :
APPLICATION :

KI-0017

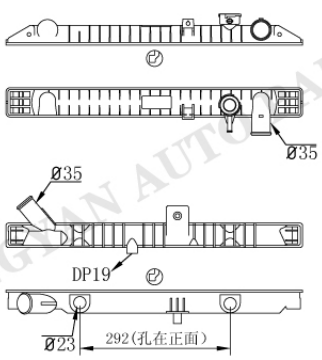

KI-0018AT/MT

Tank size : (R7×5×5×55×557.5)
OEM :0K60B15200 0K60A15200
DPI :
NISSENS :66645 66646 66622 66623
APPLICATION :
01-04 KIA K-SERIE 2.5L(DIESEL)
97-02 KIA PREGIO 2.7L(DIESEL)
97-02 KIA BESTA 2.7L(DIESEL)

KI-0017

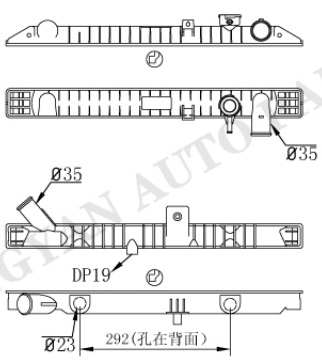

KI-0019AT

Tank size : (R7×5×5×55×557.5)
OEM :
DPI :
NISSENS :
APPLICATION :
01-04 KIA K-SERIE 2.5L(DIESEL)
97-02 KIA PREGIO 2.7L(DIESEL)
97-02 KIA BESTA 2.7L(DIESEL)

HONGYAN AUTO PARTS

KI-0020

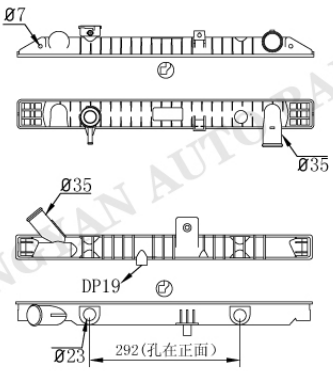

KI-0018AT/MT

Tank size :(R7×5×5×55×557.5)
OEM :
DPI :
NISSENS :
APPLICATION :
97-02 KIA PREGIO 2.7L(DIESEL)

KI-0021

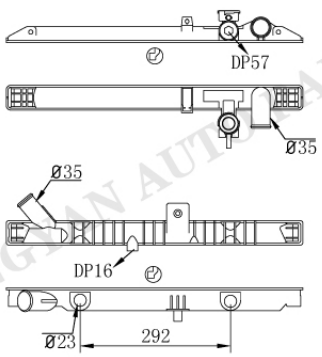

KI-0022AT/MT

Tank size :(R8×5×4×46.5×557.6)
OEM :72B15200 74A15200
DPI :
NISSENS :66612 66611
APPLICATION :
95-04 KIA PREGIO 2.5L(DIESEL)

KI-0023

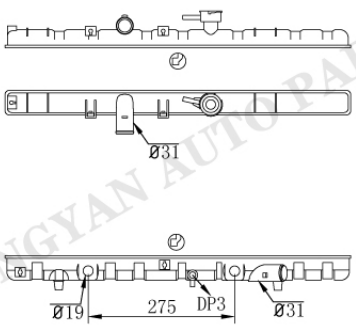

KI-0024AT/MT

Tank size :(R6.5×5×4.5×46×649)
OEM :0K31A15200A 0K31F15200E
25310FD000 25310FD010
DPI :2392
NISSENS :
APPLICATION :
01-02 KIA RIO 1.5L

KI-0025

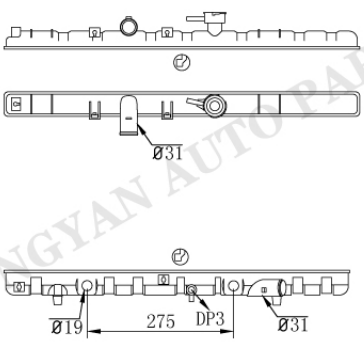

KI-0026AT/MT

Tank size :(R6.5×5×4.5×46×668)
OEM :0K31F15200 0K31F15200E
0K31F15200F 0K31H15200C
DPI :
NISSENS :66625
APPLICATION :
00-02 KIA RIO 1.3/1.5L

HONGYAN AUTO PARTS

KIA

KI-0027

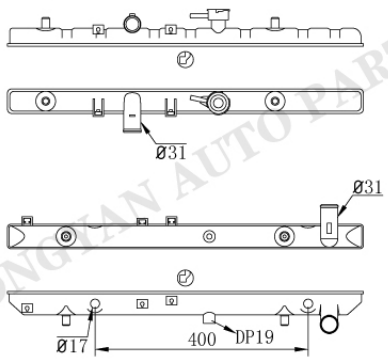

KI-0028AT/MT

Tank size :(R6.5×5×4.5×46×668)
OEM :0K31F15200E 25310FD000
DPI :2701
NISSENS :66663 66665
APPLICATION :
03-05 KIA RIO 1.3/1.5/1.6L

KI-0029

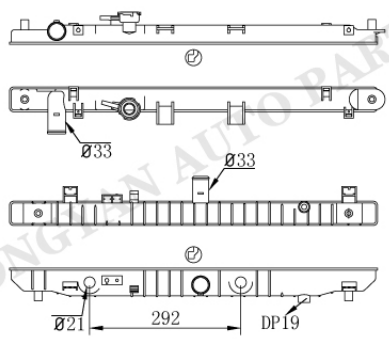

KI-0030AT/MT

Tank size :(R8×4.5×5×46.5×691)
OEM :
DPI :
NISSENS :
APPLICATION :
02- KIA CARENS 2.0L

KI-0029

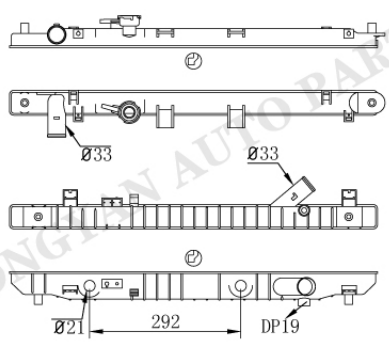

KI-0031AT/MT

Tank size :(R8×4.5×5×46.5×691)
OEM :OKAFA15200 OKAFB15200
DPI :
NISSENS :66634 66637
APPLICATION :
02- KIA CARENS 2.0L

KI-0032

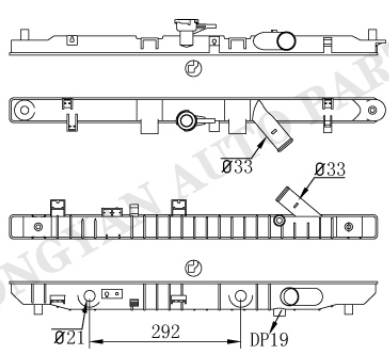

KI-0033AT/MT

Tank size :(R8×4.5×5×46.5×691)
OEM :OK2KC15200 OK2KB15200
DPI :
NISSENS :66636 66639
APPLICATION :
02- KIA CARENS 2.0L(DIESEL)

HONGTAN AUTO PARTS

KI-0034

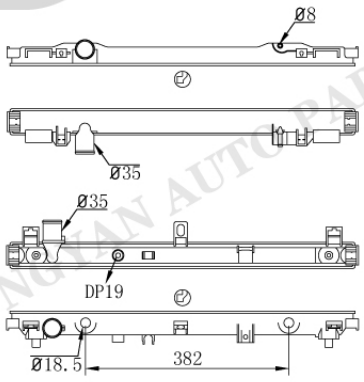

KI-0035AT/MT

Tank size :(R6.5×5×5×49.5×648.5)
OEM :253113E250 253113E170
DPI :2585
NISSENS :66659
APPLICATION :
03-06 KIA SORENTO 3.5L

KI-0036

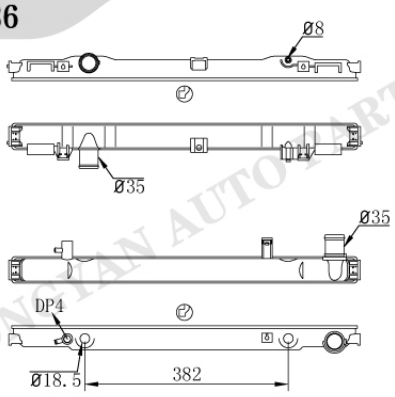

KI-0037AT/MT

Tank size :(R6.5×5×5×49.5×649.5)
OEM :
DPI :
NISSENS :
APPLICATION :
02- KIA SORENTO 2.5/3.5L

KI-0038

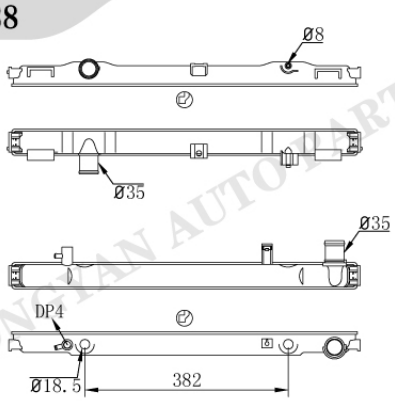

KI-0037AT/MT

Tank size :(R6.5×5×5×49.5×649.5)
OEM :253103E350 253113E170
DPI :
NISSENS :66658 66659
APPLICATION :
02- KIA SORENTO 2.5/3.5L

KI-0039AT/MT

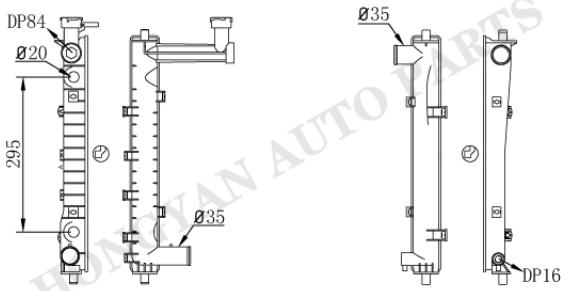

KI-0040

Tank size :(R4×4×6×55.5×443)
OEM :0K52Y15200C 0K52Y15200D
DPI :2442
NISSENS :
APPLICATION :
02-05 KIA SEDONA 3.5L

HONGTIAN AUTO PARTS

KIA

KI-0041

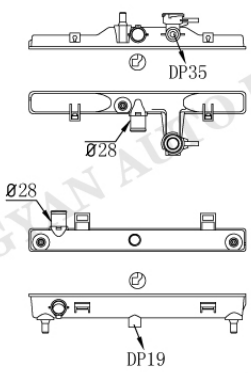

Tank size :(R8.5×5×5×44×407)
OEM :2531007000/10/11
DPI :
NISSENS :66654 66655
APPLICATION :
04-07 KIA PICANTO 1.0/1.1L

KI-0042

KI-0043

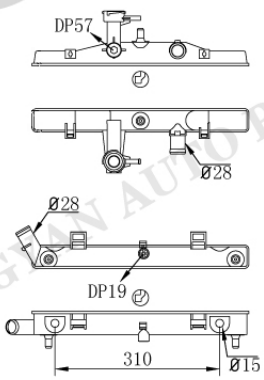

Tank size : (R8.5×5×5×44×407)
OEM :2531007500/10
2531007800/10
DPI :
NISSENS :66760
APPLICATION :
07-14 KIA PICANTO 1.1L

KI-0044AT/MT

KI-0045

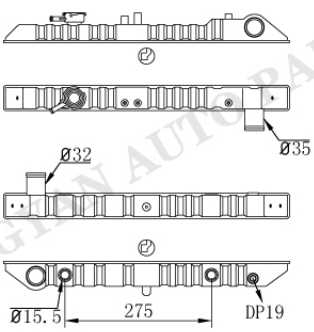

Tank size :(R5.5×5×4.5×47.5×537)
OEM :0K03815200 0K04815200
DPI :2561
NISSENS :
APPLICATION :
02- KIA SPORTAGE 2.0L

KI-0046AT/MT

KI-0047

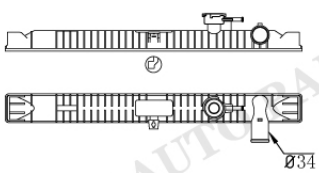

Tank size :(R7×5×5×55×557.5)
OEM :
DPI :
NISSENS :
APPLICATION :
97-02 KIA PREGIO 2.7L(DIESEL)

HONGYAN AUTO PARTS

KI-7

KI-0049

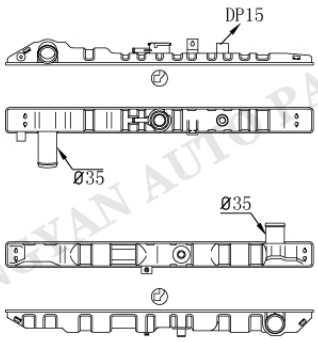

KI-0050

Tank size :(R8×4×4.5×48×578)
OEM : 0K71E15200A/B/C 0K71E15208
0K71E15208A
DPI :
NISSENS :66667
APPLICATION :
96-01 KIA BESTA 2.2L

KI-0051

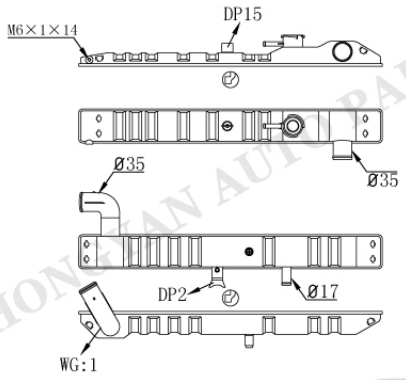

KI-0052

Tank size :(R8×5×5×64×569.5)
OEM :
DPI :
NISSENS :
APPLICATION :
KIA LIGHT TRUCK

KI-0053

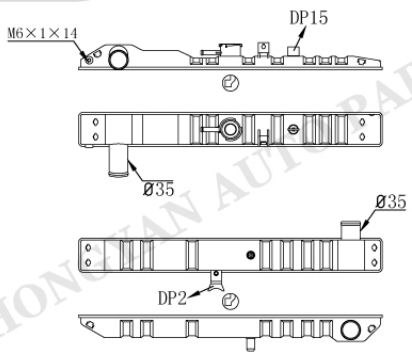

KI-0054

Tank size :(R8×5×5×64×569.5)
OEM :
DPI :
NISSENS :
APPLICATION :
KIA LIGHT TRUCK

KI-0055

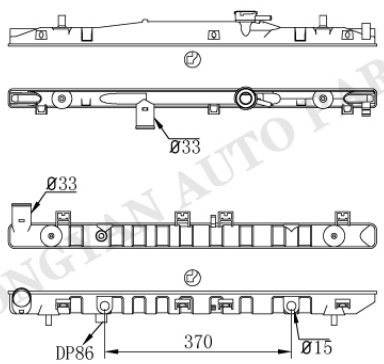

KI-0056AT/MT

Tank size :(R8.5×5×4×36/47×692)
OEM :253102F020/30
253102F061/71
DPI :2784
NISSENS :
APPLICATION :
04-09 KIA SPECTRA 2.0L

KIA

KI-0057

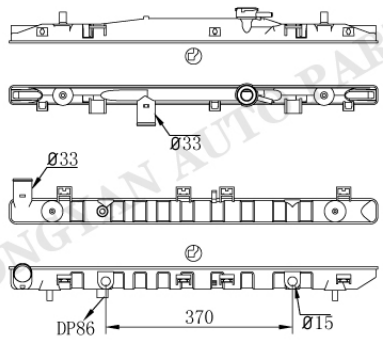

KI-0056AT/MT

Tank size :(R8.5×5×4×36/47×692)
OEM :
DPI :
NISSENS :
APPLICATION :
04-09 KIA SPECTRA 2.0L

KI-0058

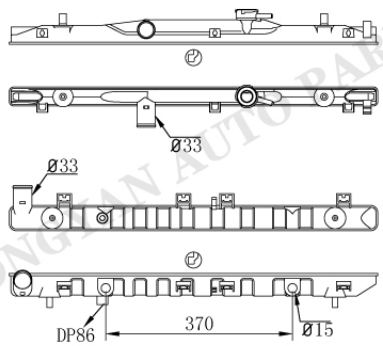

KI-0056AT/MT

Tank size :(R8.5×5×4×36/47×692)
OEM :
DPI :
NISSENS :
APPLICATION :
04-09 KIA SPECTRA 2.0L

KI-0059

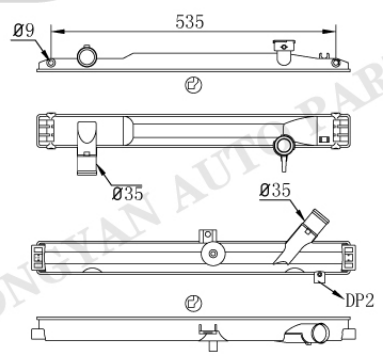

KI-0060

Tank size :(R6.5×5×5×62×588)
OEM :
DPI :
NISSENS :
APPLICATION :
10- KIA BONGO

KI-0061

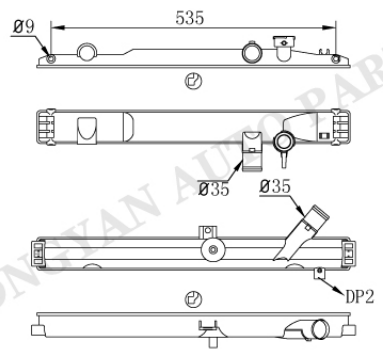

KI-0060

Tank size :(R6.5×5×5×62×588)
OEM :
DPI :
NISSENS :
APPLICATION :
10- KIA BONGO

HONGYAN AUTO PARTS

KIA

KI-0062

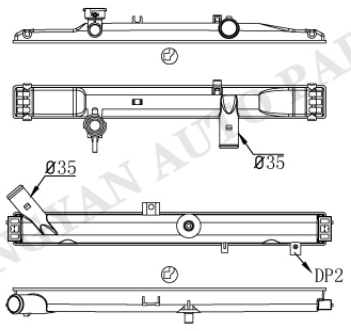

KI-0063

Tank size :(R6.5×5×5×62×588)
OEM :
DPI :
NISSENS :
APPLICATION :
09- KIA PICK UP

KI-0064

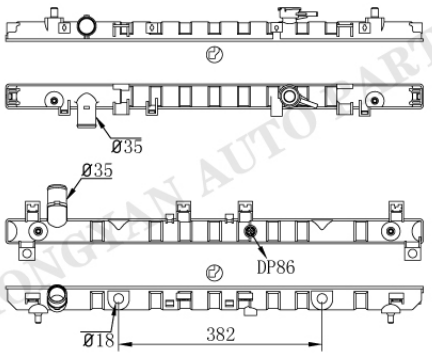

KI-0065AT/MT

Tank size :(R7×5×4.5×46.5×784)
OEM :
DPI :
NISSENS :
APPLICATION :
06- KIA GRAND CARNIVAL

KI-0066AT/MT

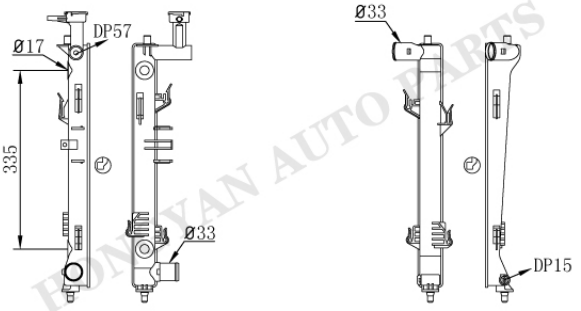

KI-0067

Tank size :(R8×5×4.5×44×457.5)
OEM :253101M100 253101M120
DPI :13133 13132
NISSENS :
APPLICATION :
10-13 KIA FORTE 2.0/2.4L

KI-0068AT/MT

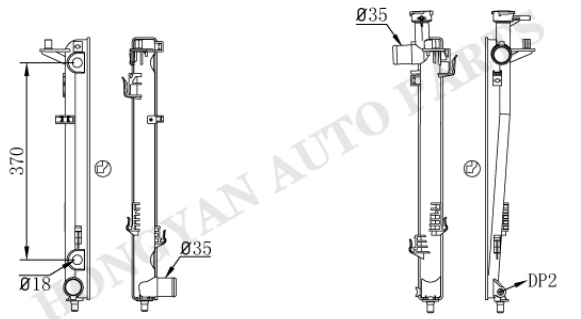

KI-0069

Tank size :(R7.5×5×4.5×46.3×492)
OEM :253102P500 253102P800
DPI :
NISSENS :66693 66696
APPLICATION :
09-15 KIA SORENTO 2.4L

KIA

KI-0070AT/MT

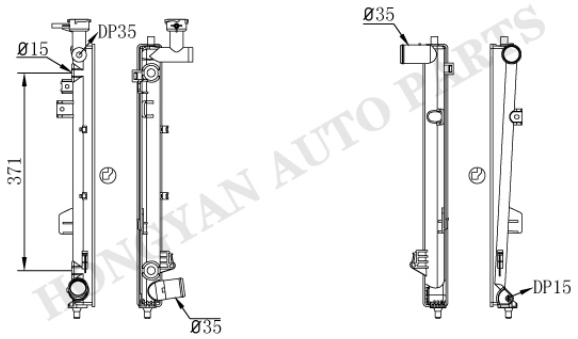

KI-0071

Tank size :(R8×5×4.5×46.3×493)
OEM :253101D110 253101D120
DPI :2961 2960
NISSENS :66685
APPLICATION :
07-12 KIA RONDO 2.4/2.7L
06-11 KIA CARENS 2.0L

KI-0072AT/MT

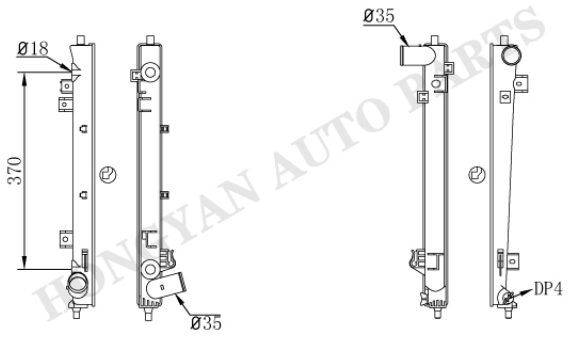

KI-0073

Tank size :(R8×5×4.5×46.3×493)
OEM :253101D200/30
DPI :
NISSENS :66684 66686
APPLICATION :
06-15 KIA CARENS 2.0L(DIESEL)

KI-0074

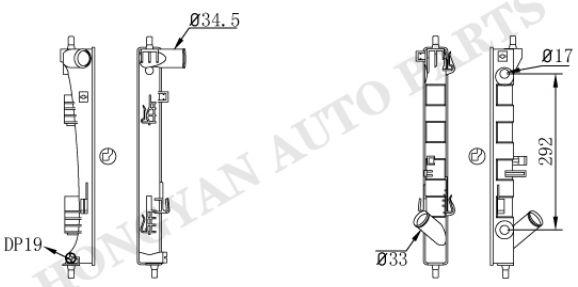

KI-0075AT/MT

Tank size :(R7×5×5×46.5×409)
OEM :
DPI :
NISSENS :
APPLICATION :
KIA K3

KI-0076

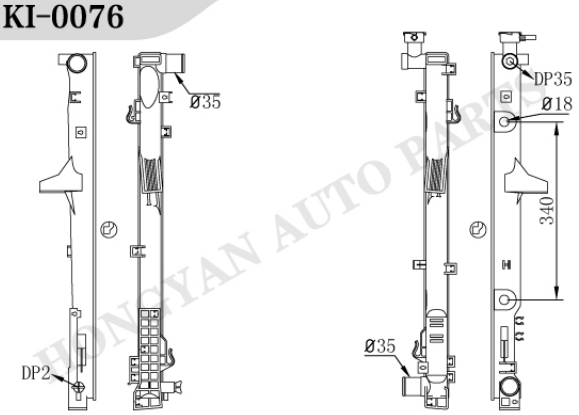

KI-0077AT/MT

Tank size :(R8×5×4.5×47×666)
OEM :
DPI :
NISSENS :
APPLICATION :
07-09 KIA SORENTO 2.5L

HUNGYAN AUTO PARTS

KI-0078

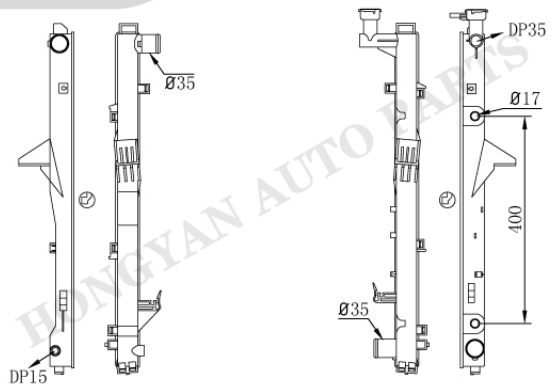

KI-0079AT/MT

Tank size :(R7.5×5×5×46.3×646)
OEM :253103E930
DPI :2962
NISSENS :
APPLICATION :
07-09 KIA SORENTO 3.3/3.8L

KI-0078

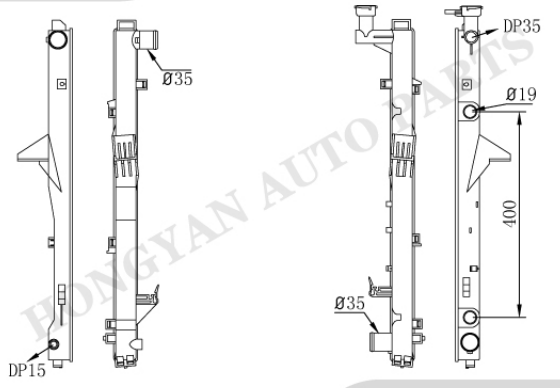

KI-0079-1AT

Tank size :(R7.5×5×5×46.3×646)
OEM :253103E930
DPI :2962
NISSENS :
APPLICATION :
07-09 KIA SORENTO 3.3/3.8L

KI-0080

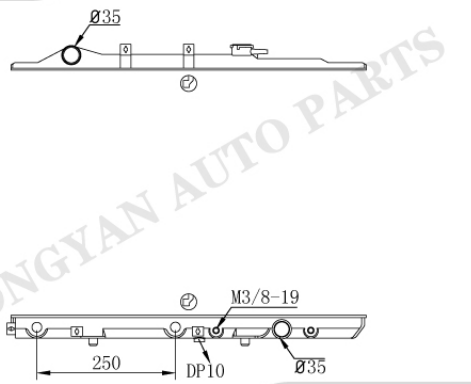

KI-0081AT/MT

Tank size :(R8×5×4×47×667)
OEM :
DPI :
NISSENS :
APPLICATION :

KI-0080

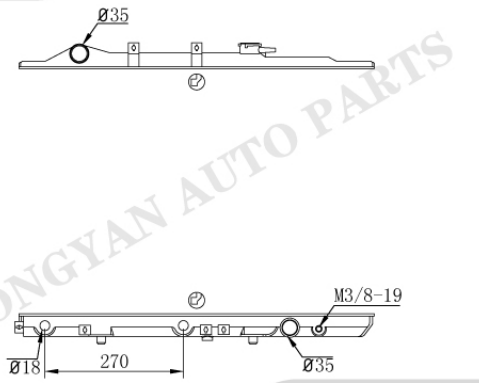

KI-0082AT/MT

Tank size :(R8×5×4×47×667)
OEM :
DPI :
NISSENS :
APPLICATION :

HONGYAN AUTO PARTS

KIA

KI-0083

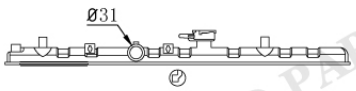

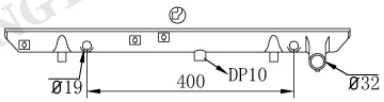

Tank size :(R6.5×5×5×46×648)
OEM :
DPI :
NISSENS :
APPLICATION :

KI-0084AT/MT

KI-0085

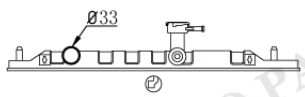

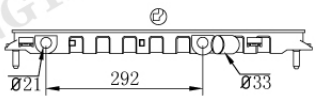

Tank size : (R7.5×5×4.5×46.4×549.5)
OEM :
DPI :
NISSENS :
APPLICATION :

KI-0086AT/MT

KI-0087

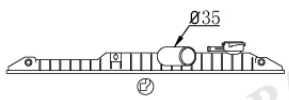

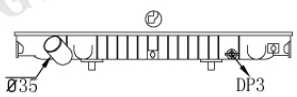

Tank size :(R7×5×5×69.2×521.5)
OEM :
DPI :
NISSENS :
APPLICATION :

KI-0088AT/MT

KI-0089

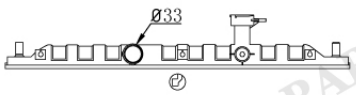

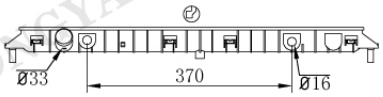

Tank size : (R7.5×5×4.5×46.5×647)
OEM :253101G150 253101G151
DPI :2820 2821
NISSENS :66687
APPLICATION :
06-11 KIA RIO 1.6L

KI-0090AT/MT

HONGYAN AUTO PARTS

KI-0089

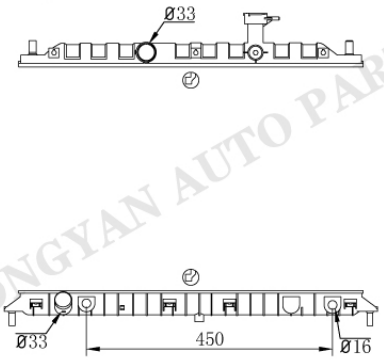

KI-0090-1AT

Tank size : (R7.5×5×4.5×46.5×647)
OEM :253101G150 253101G151
DPI :2820 2821
NISSENS :66687
APPLICATION :
06-11 KIA RIO 1.6L

KI-0091AT/MT



KI-0092

Tank size :(R8.5×5×4×47×442.5)
OEM :0K58815200A
DPI :
NISSENS :66640 66641
APPLICATION :
01- KIA CARNIVAL 2.5L
01- KIA SEDONA 2.5L

KI-0093AT/MT

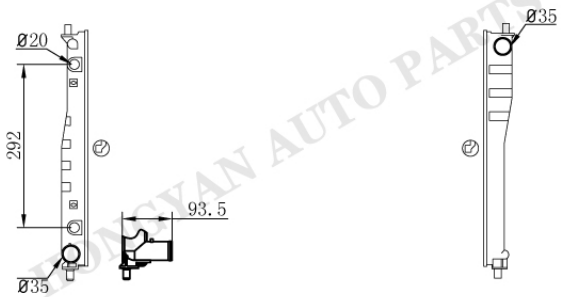

KI-0092

Tank size :(R8.5×5×4×47×442.5)
OEM :0K55215200A 0K55215200D
DPI :
NISSENS :66618 66619
APPLICATION :
99-06 KIA CARNIVAL 2.9L
99-06 KIA SEDONA 2.9L

KI-0094AT/MT

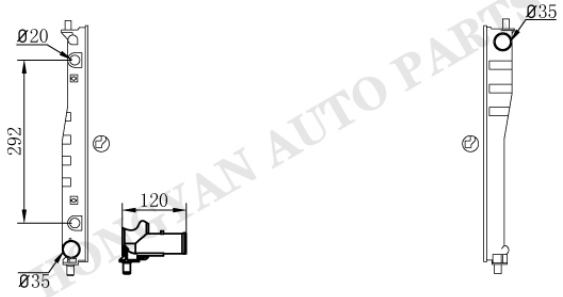

KI-0092

Tank size :(R8.5×5×4×47×442.5)
OEM :
DPI :
NISSENS :
APPLICATION :
99-06 KIA CARNIVAL 2.9L
99-06 KIA SEDONA 2.9L

HONGYAN AUTO PARTS

KIA

KI-0095

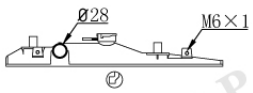

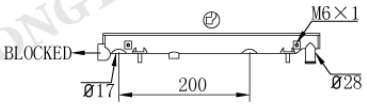

KI-0096AT/MT

Tank size :(R7.5×5×4×46×407)
OEM :B10215200 B11315200
KK13915200A KK15015200/A
DPI :
NISSENS :62505
APPLICATION :
90-04 KIA PRIDE 1.1L

KI-0095

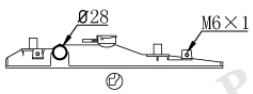

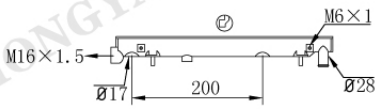

KI-0097AT/MT

Tank size : (R7.5×5×4×46×407)
OEM :18015200
DPI :315 263
NISSENS :66600
APPLICATION :
90-01 KIA PRIDE 1.3L

KI-0095

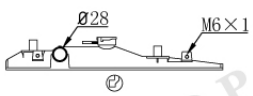

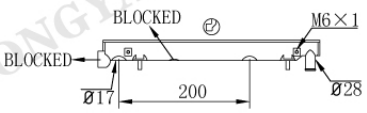

KI-0098AT/MT

Tank size :(R7.5×5×4×46×407)
OEM :
DPI :
NISSENS :
APPLICATION :
90-04 KIA PRIDE 1.1L

KI-0099AT/MT

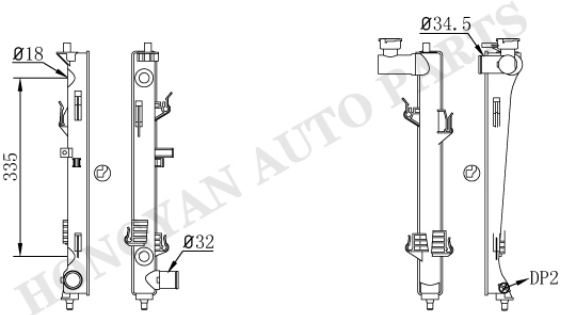

KI-0100

Tank size :(R8×5×4.5×46.5×458)
OEM :
DPI :
NISSENS :
APPLICATION :
10- KIA FORTE 2.0L

HONGYAN AUTO PARTS

KI-0101AT/MT



KI-0102

Tank size : (R8×5×5×46.5×425)
OEM :253102K050
DPI :13135
NISSENS :
APPLICATION :
10-11 KIA SOUL 1.6L

KI-0103AT/MT

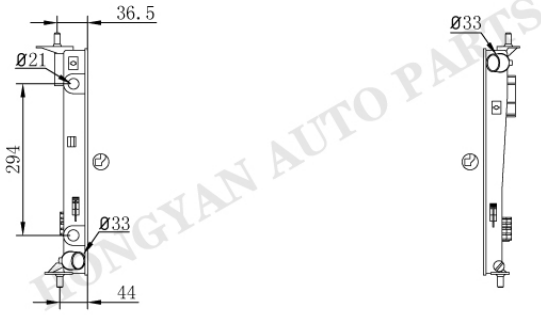

KI-0102

Tank size : (R8×5×5×46.5×425)
OEM :253102K000
DPI :
NISSENS :66742
APPLICATION :
09-15 KIA SOUL 1.6L

KI-0104AT/MT



KI-0105

Tank size : (R8×5×5×46.5×425)
OEM :253102K150
DPI :13134
NISSENS :
APPLICATION :
10-11 KIA SOUL 2.0L

KI-0104-1AT



KI-0105

Tank size :(R8×5×5×46.5×425)
OEM :253102K150
DPI :13134
NISSENS :
APPLICATION :
10-11 KIA SOUL 2.0L

HONGYAN AUTO PARTS

KIA

KI-0106

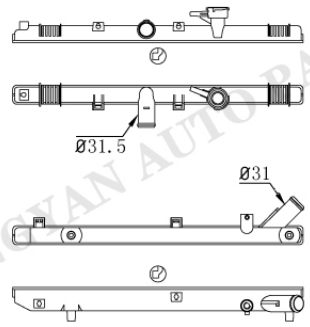

KI-0107

Tank size :(R6×6×4.5×35.5×546)
OEM :0K30A15200D/E 0K30C15200B
0K31A15200 0K31A15200A
DPI :
NISSENS :66624
APPLICATION :
00-02 KIA RIO 1.3/1.5L

KI-0108

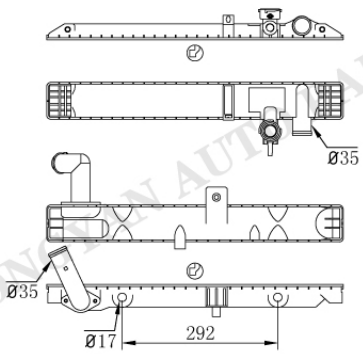

KI-0109AT/MT

Tank size :(R8.5×5×4×69.5×558)
OEM :
DPI :
NISSENS :
APPLICATION :
KIA PREGIO

KI-0108

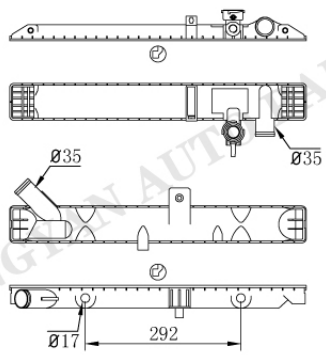

KI-0110AT/MT

Tank size :(R8.5×5×4×69.5×558)
OEM :
DPI :
NISSENS :
APPLICATION :
KIA PREGIO

KI-0111

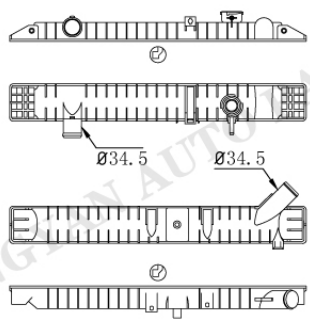

KI-0112

Tank size :(R7.5×5×4×70×558)
OEM : 9KA002418
DPI :
NISSENS :
APPLICATION :
02-07 KIA K2500

HONGYAN AUTO PARTS

KI-0113

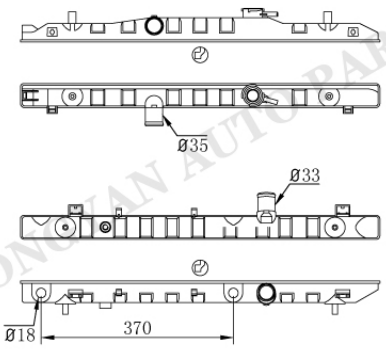

KI-0114AT/MT

Tank size :(R8×5×4.5×46.5×692)
OEM :
DPI :
NISSENS :
APPLICATION :
KIA CERATO

KI-0115

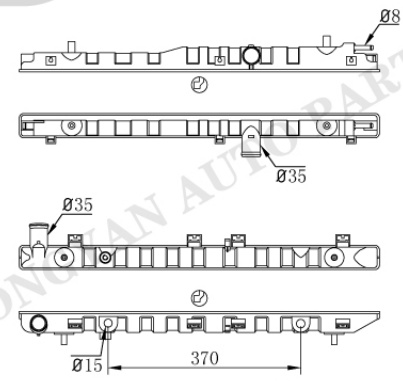

KI-0116AT/MT

Tank size :(R8×5×5×46.5×692)
OEM :253102F500
DPI :
NISSENS :66681
APPLICATION :
05-10 KIA CERATO 1.5L(DIESEL)

KI-0115

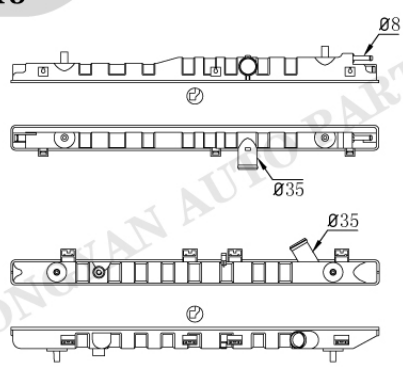

KI-0117

Tank size :(R8×5×5×46.5×692)
OEM :253102F300
DPI :
NISSENS :66680
APPLICATION :
05-10 KIA CERATO 2.0L(DIESEL)

KI-0118

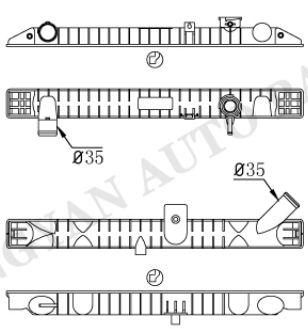

KI-0119

Tank size :(R7×5×5×55×557.5)
OEM :
DPI :
NISSENS :
APPLICATION :
01-04 KIA K-SERIE 2.5L(DIESEL)
97-02 KIA PREGIO 2.7L(DIESEL)

HONGJIAN AUTO PARTS

KIA

KI-0120

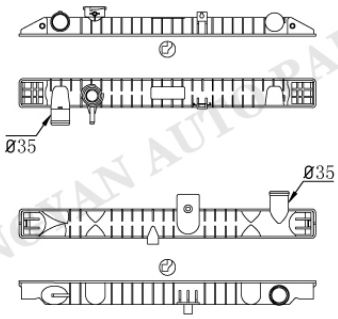

KI-0121

Tank size :(R7×5×5×55×557.5)
OEM :
DPI :
NISSENS :
APPLICATION :
01-04 KIA K-SERIE 2.5L(DIESEL)
97-02 KIA PREGIO 2.7L(DIESEL)

KI-0122

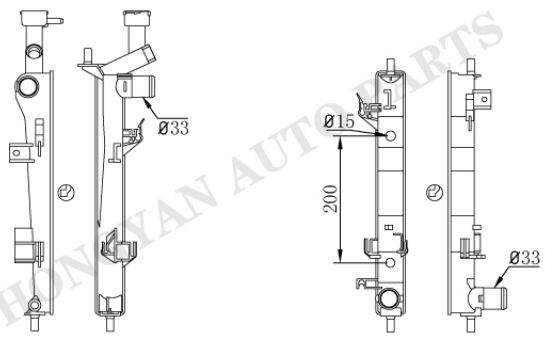

KI-0123AT/MT

Tank size :(R7×5×4.5×46.5×383)
OEM :253101Y000/100 253101Y050
DPI :
NISSENS :66746 66747
APPLICATION :
11-15 KIA PICANTO 1.2L
11-15 KIA MORNING 1.2L

KI-0124

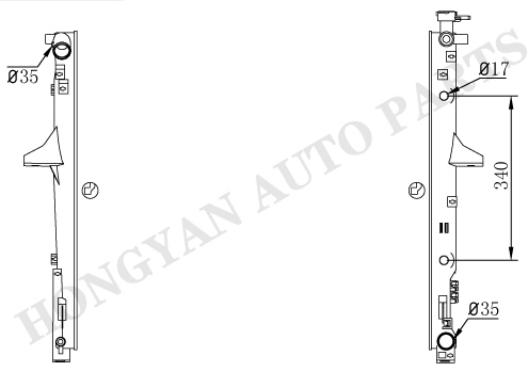

KI-0125AT/MT

Tank size :(R8.5×5×4.5×57×659)
OEM :
DPI :
NISSENS :
APPLICATION :
KIA SORENTO

KI-0126

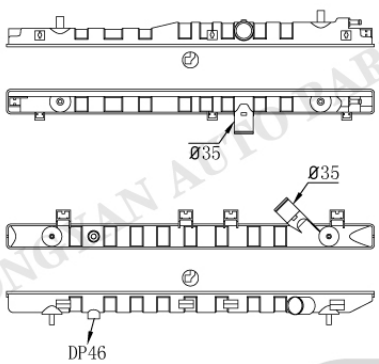

KI-0127

Tank size :(R8×5×4.5×46.5×692)
OEM :253102F300
DPI :
NISSENS :66680
APPLICATION :
04- KIA CERATO 2.0L(DIESEL)

HONGYAN AUTO PARTS

KI-0128

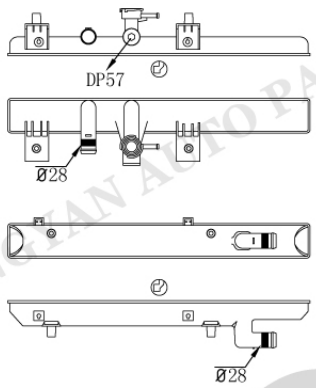

KI-0129

Tank size :(R6.5×5×5×59×569)
OEM :
DPI :
NISSENS :
APPLICATION :
KIA EIS

KI-0130

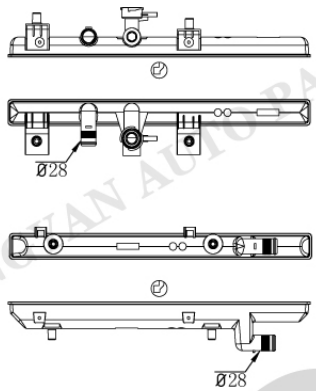

KI-0131

Tank size :(R6.5×5×4.5×47×568)
OEM :
DPI :
NISSENS :
APPLICATION :

KI-0132

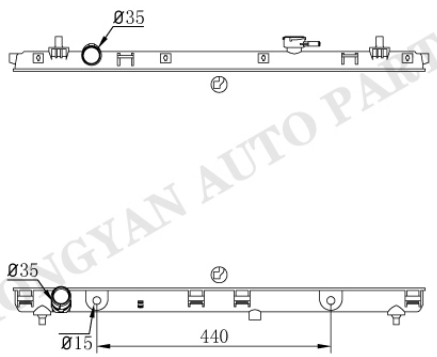

KI-0133AT/MT

Tank size :(R8.5×5.5×5×48×774)
OEM :253104D900/1/2
DPI :2898
NISSENS :
APPLICATION :
06-10 KIA SEDONA 3.8L
07-10 HYUNDAI ENTOURAGE 3.8L

KI-0134AT/MT



KI-0135

Tank size :(R9×5.5×5×55.5×442.5)
OEM :
DPI :
NISSENS :
APPLICATION :
02-05 KIA SEDONA 3.5L

HONGYAN AUTO PARTS

KIA

KI-0136

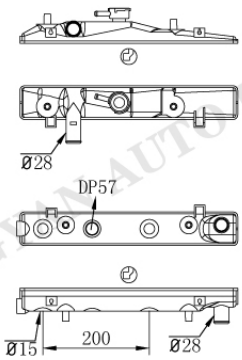

KI-0137AT/MT

Tank size :(R8.5×5×4.5×63×409)
OEM :
DPI :
NISSENS :
APPLICATION :
93- KIA PRIDE 1.1/1.3L (加宽型)

KI-0138

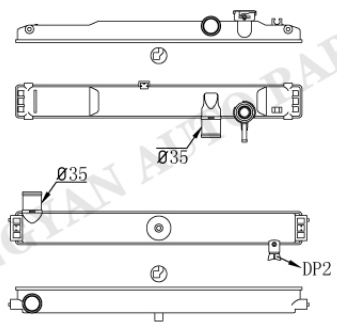

KI-0139

Tank size :(R7×5×5×62×538)
OEM :
DPI :
NISSENS :
APPLICATION :
KIA BONGO

KI-0140

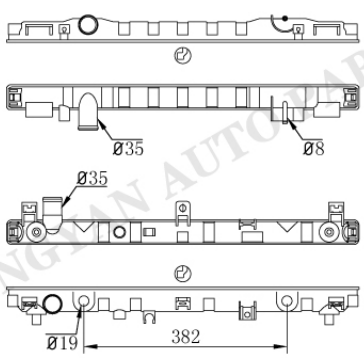

KI-0141AT/MT

Tank size :(R9.5×5×4.8×46.5×662)
OEM :
DPI :
NISSENS :
APPLICATION :
KIA SORENTO

KI-0142

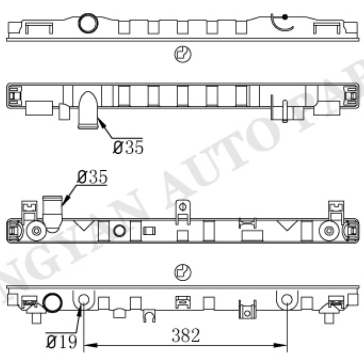

KI-0141AT/MT

Tank size :(R9.5×5×4.8×46.5×662)
OEM :
DPI :
NISSENS :
APPLICATION :
KIA SORENTO

HONGYAN AUTO PARTS

KI-0143

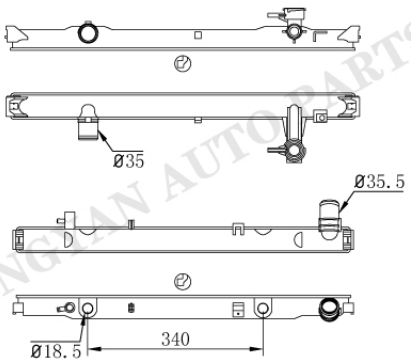

KI-0144AT/MT

Tank size :(R6.5×5×5×49.5×648)
OEM :
DPI :
NISSENS :
APPLICATION :
KIA SORENTO

KI-0145

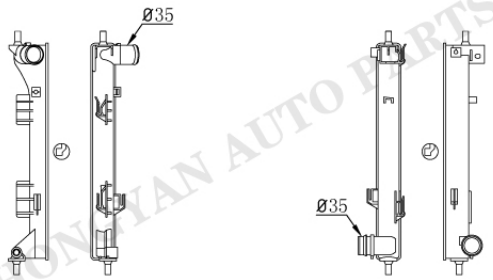

KI-0146

Tank size :(R8×5×4.8×46.5×408)
OEM :
DPI :
NISSENS :
APPLICATION :
15- KIA KX3

KI-0147AT/MT

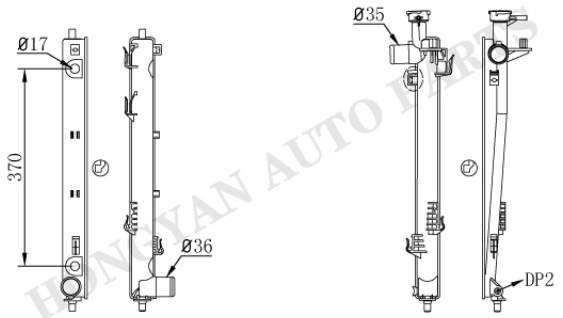

KI-0069

Tank size :(R7.5×5×4.5×46.3×492)
OEM :
DPI :
NISSENS :
APPLICATION :
KIA SORENTO 2.2D

KI-0068AT/MT

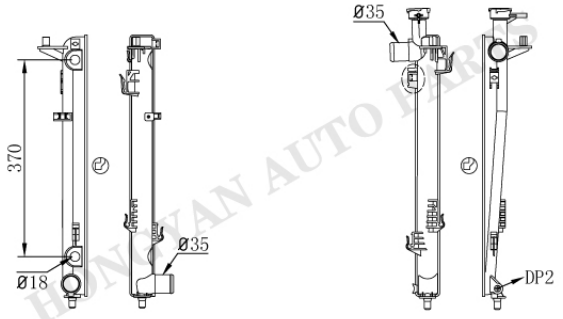

KI-0069-1

Tank size :(R7.5×5×4.5×46.3×492)
OEM :
DPI :
NISSENS :
APPLICATION :

HONGYAN AUTO PARTS

KIA

KI-0089

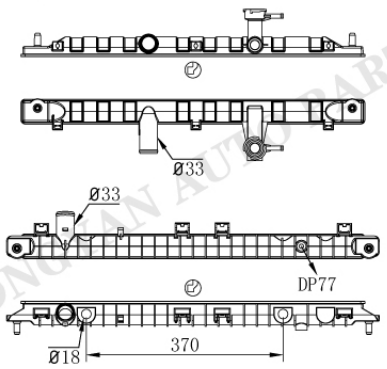

Tank size :(R8×5×4.5×46.5×647)
OEM :
DPI :
NISSENS :66687
APPLICATION :
06- KIA RIO 1.6L

KI-0148AT/MT

KI-0149AT/MT

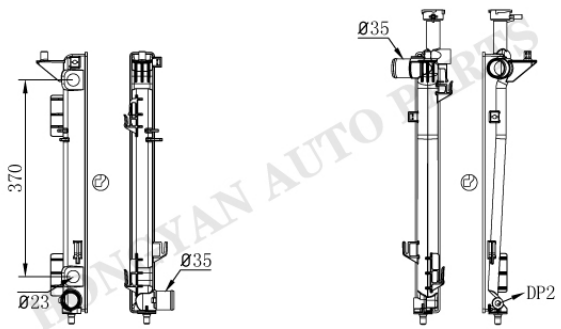

Tank size :(R7.5×5×4.5×46×490)
OEM :25310A9050
DPI :13508
NISSENS :
APPLICATION :
15-16 KIA SEDONA 3.3L

KI-0150

KI-0145

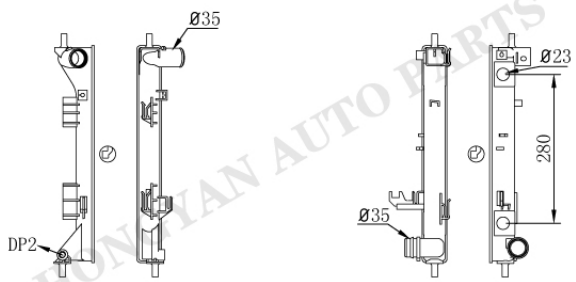

Tank size :(R6.5×4.8×4.8×46.5×408)
OEM :25310A2000
DPI :
NISSENS :66775
APPLICATION :
12- KIA CEE'D 1.6L

KI-0151AT/MT

KI-0020

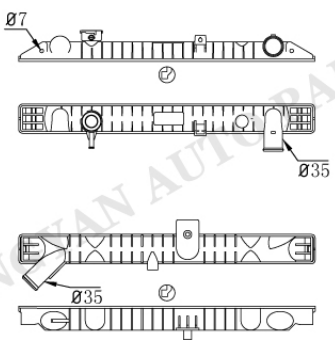

Tank size :(R7×5×5×55×557.5)
OEM :
DPI :
NISSENS :
APPLICATION :
97-02 KIA PREGIO 2.7L(DIESEL)

KI-0152

HONGYAN AUTO PARTS

KI-0029

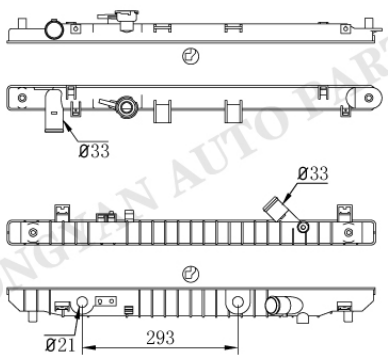

KI-0153AT/MT

Tank size :(R8×4.5×5×46.5×691)
OEM :
DPI :
NISSENS :
APPLICATION :
02- KIA CARENS 2.0L

KI-0154

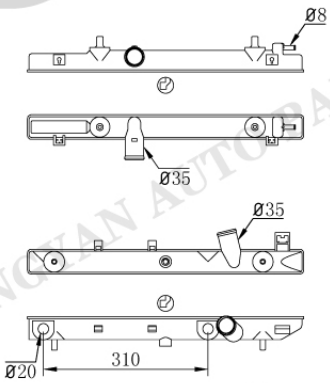

KI-0155AT/MT

Tank size :(R8×5×4.5×46.5×520)
OEM :
DPI :
NISSENS :
APPLICATION :

KI-0156AT/MT

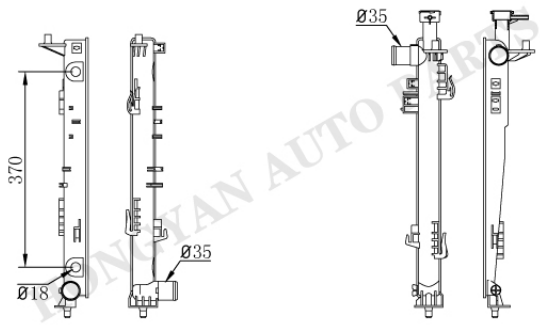

KI-0157

Tank size :(R8×5×4.5×46.5×490.5)
OEM :
DPI :
NISSENS :
APPLICATION :
15- KI SORENTO

KI-0158AT/MT

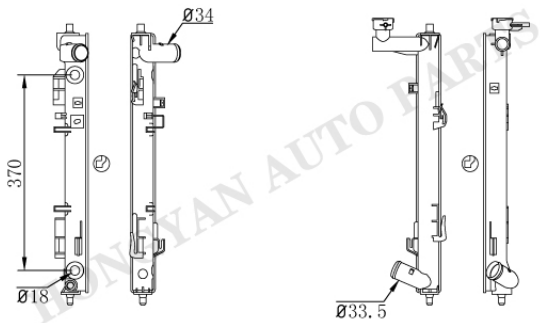

KI-0159

Tank size :(R7×5×4.5×46.5×490.5)
OEM :
DPI :
NISSENS :
APPLICATION :
12- K4

HONGYAN AUTO PARTS

KIA

KI-0160AT/MT

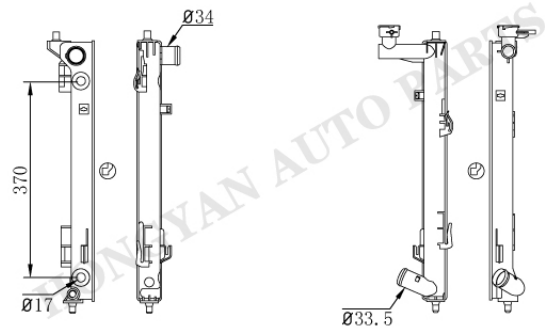

KI-0159

Tank size :(R7×5×4.5×46.5×490.5)
OEM :
DPI :
NISSENS :
APPLICATION :
12- K4

KI-0161AT/MT

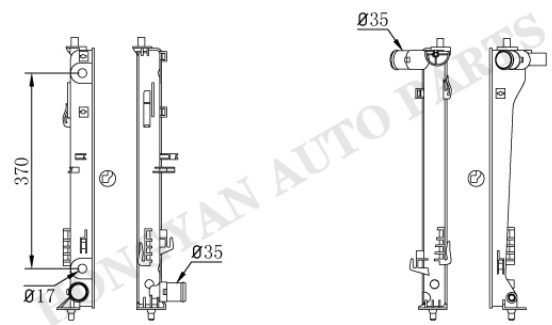

KI-0162

Tank size :(R8×5×4.5×46.5×490.5)
OEM :
DPI :
NISSENS :
APPLICATION :
16- KX5

KI-0145

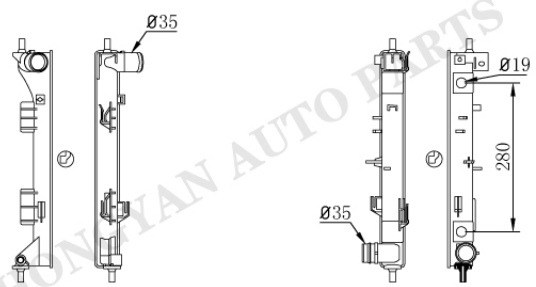

KI-0163AT/MT

Tank size :(R6.5×4.8×4.8×46.5×408)
OEM :25310A5800 25310A5850
DPI :13518
NISSENS :67607 67608
APPLICATION :
14-16 KIA FORTE KOUP 1.6L
14-16 KIA FORTE5 1.6L

KI-0164

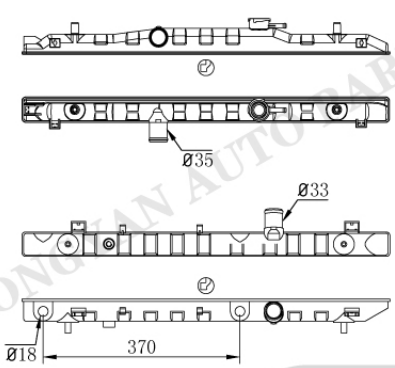

KI-0114AT/MT

Tank size :(R8×5×4.5×46.5×692)
OEM :
DPI :
NISSENS :
APPLICATION :
KIA CERATO

HONGYAN AUTO PARTS

KI-0165

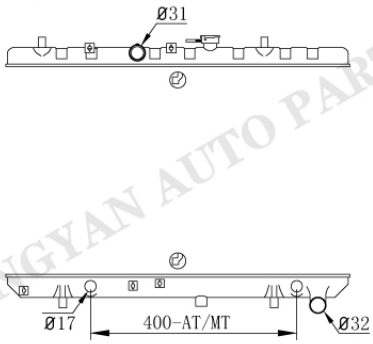

KI-0166AT/MT

Tank size :(R6.5×5×5×46×647)
OEM :
DPI :
NISSENS :
APPLICATION :
03-05 KIA RIO 1.3/1.5/1.6L

KI-0167

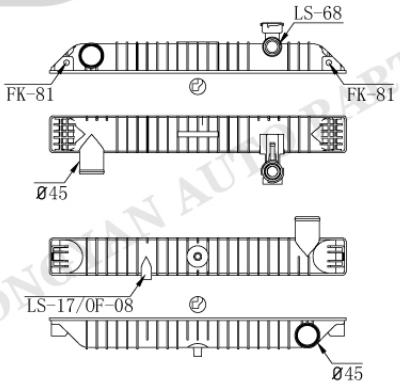

KI-0168

Tank size :(R7.5×5×5×70×558)
OEM :
DPI :
NISSENS :
APPLICATION :
KIA BONGO

KI-0169

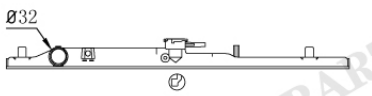

Tank size :(R8×5×4.5×47×645)
OEM :
DPI :
NISSENS :
APPLICATION :
93-97 KIA SEPHIA

KI-0171

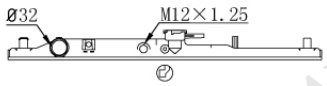

Tank size :(R7×5×4.5×47×590)
OEM :
DPI :
NISSENS :
APPLICATION :
93-97 KIA SEPHIA

HONGYAN AUTO PARTS

KIA

KI-0171-1

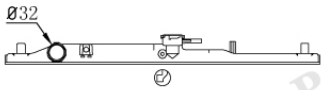

Tank size :(R7×5×4.5×47×590)
OEM :
DPI :
NISSENS :
APPLICATION :
93-97 KIA SEPHIA

Tank size :
OEM :
DPI :
NISSENS :
APPLICATION :

Tank size :
OEM :
DPI :
NISSENS :
APPLICATION :

Tank size :
OEM :
DPI :
NISSENS :
APPLICATION :

HONGYAN AUTO PARTS

	Tank size : OEM : DPI : NISSENS : APPLICATION :
	Tank size : OEM : DPI : NISSENS : APPLICATION :
	Tank size : OEM : DPI : NISSENS : APPLICATION :
	Tank size : OEM : DPI : NISSENS : APPLICATION :

HONGYAN AUTO PARTS

KIA

	Tank size : OEM : DPI : NISSENS : APPLICATION :
	Tank size : OEM : DPI : NISSENS : APPLICATION :
	Tank size : OEM : DPI : NISSENS : APPLICATION :
	Tank size : OEM : DPI : NISSENS : APPLICATION :

HONGYAN AUTO PARTS

LADA

LA-0001



HONGYAN AUTO PARTS

LA-0002

Tank size :(R4×4.5×6×47×342)
OEM :
DPI :
NISSENS :
APPLICATION :
LADA

LA-0003



HONGYAN AUTO PARTS

LA-0004

Tank size :(R5×4×6×47.5×342)
OEM :
DPI :
NISSENS :
APPLICATION :
LADA

LA-0005



HONGYAN AUTO PARTS

LA-0006

Tank size :(R5×4×6×47×342)
OEM :
DPI :
NISSENS :
APPLICATION :
LADA

LA-0007



HONGYAN AUTO PARTS

LA-0008

Tank size :(R5×4×6×47×342)
OEM :
DPI :
NISSENS :
APPLICATION :
LADA

LADA

LA-0009



LA-0010

Tank size :(R6.5×5×5×46×331)
OEM :
DPI :
NISSENS :
APPLICATION :
LADA

LA-0011



LA-0012

Tank size :(R7×5×5×58×402)
OEM :
DPI :
NISSENS :
APPLICATION :
LADA

LA-0013



LA-0014

Tank size :(R5×4.5×5×47×342)
OEM :
DPI :
NISSENS :
APPLICATION :
LADA

LA-0015



LA-0016

Tank size :(R5×4.5×5×47×342)
OEM :
DPI :
NISSENS :
APPLICATION :
LADA

HONGYAN AUTO PARTS

LADA

LA-0015



LA-0017

Tank size :(R5×4.5×5×47×342)
OEM :
DPI :
NISSENS :
APPLICATION :
LADA

LA-0018



LA-0019

Tank size :(R6.5×5×5×46×331)
OEM :
DPI :
NISSENS :
APPLICATION :
LADA

LA-0020



LA-0021

Tank size :(R5×4.5×5×47×342)
OEM :
DPI :
NISSENS :
APPLICATION :
LADA

LA-0022



LA-0023

Tank size :(R5×4.5×5×47×342)
OEM :
DPI :
NISSENS :
APPLICATION :
LADA

HONGYAN AUTO PARTS

LADA

LA-0024

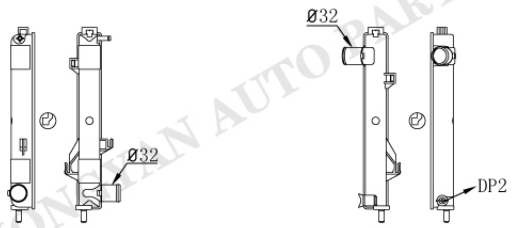

Tank size :(R6.5×5×5×46×331)
OEM :
DPI :
NISSENS :
APPLICATION :
LADA GRANTA

LA-0025

LA-0026

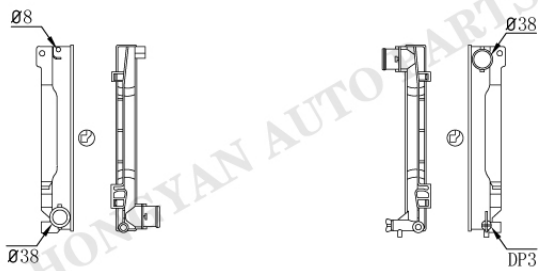

Tank size :(R5×4×4.8×47×350.3)
OEM :
DPI :
NISSENS :
APPLICATION :

LA-0027

Tank size :
OEM :
DPI :
NISSENS :
APPLICATION :

Tank size :
OEM :
DPI :
NISSENS :
APPLICATION :

HONGYAN AUTO PARTS

MASERATI

MAS-0001

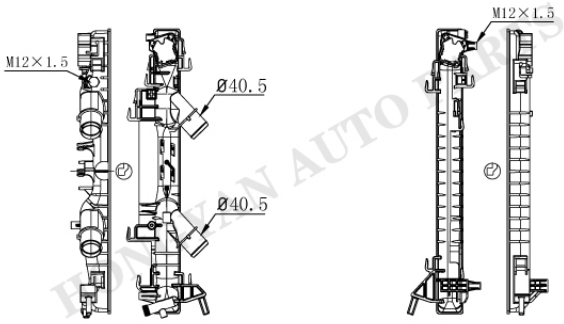

MAS-0002

Tank size :(R5×3.5×5×52×535.5)
OEM :
DPI :
NISSENS :
APPLICATION :
MASERATI

Tank size :
OEM :
DPI :
NISSENS :
APPLICATION :

Tank size :
OEM :
DPI :
NISSENS :
APPLICATION :

Tank size :
OEM :
DPI :
NISSENS :
APPLICATION :

HONGYAN AUTO PARTS

MAZDA

MA-0001

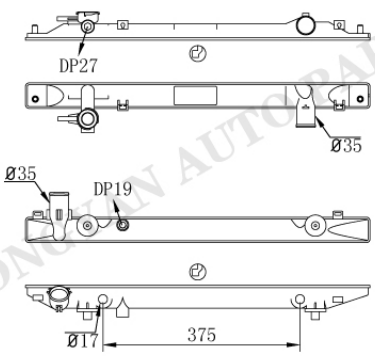

MA-0002AT/MT

Tank size :(R7×5×4.5×48×647)
OEM :
DPI :
NISSENS :
APPLICATION :
99-05 MAZDA B2500 2.5L(DIESEL)
99-07 MAZDA BOUNTY
06-11 MAZDA BT-50
96-07 MAZDA DRIFTER
96-07 MAZDA FROCEED

MA-0001

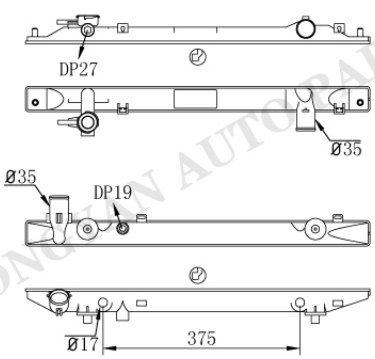

MA-0003AT/MT

Tank size :(R7×5×4.5×48×647)
OEM :
DPI :
NISSENS :
APPLICATION :
99-05 MAZDA B2500 2.5L(DIESEL)
99-07 MAZDA BOUNTY
06-11 MAZDA BT-50
96-07 MAZDA DRIFTER
96-07 MAZDA FROCEED

MA-0001

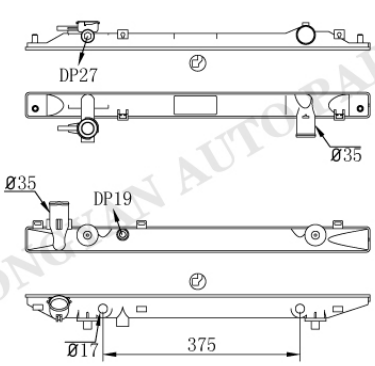

MA-0004AT/MT

Tank size :(R7×5×4.5×48×647)
OEM :1378035 1455864/9241
1481508
DPI :
NISSENS :62246A
APPLICATION :
99-05 MAZDA B2500 2.5L(DIESEL)
99-07 MAZDA BOUNTY
06-11 MAZDA BT-50
96-07 MAZDA DRIFTER
96-07 MAZDA FROCEED

MA-0001

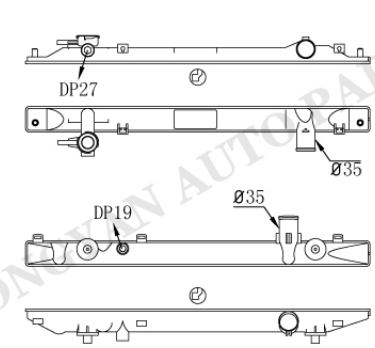

MA-0005MT

Tank size :(R7×5×4.5×48×647)
OEM :
DPI :
NISSENS :
APPLICATION :

HONGYAN AUTO PARTS

MA-0006

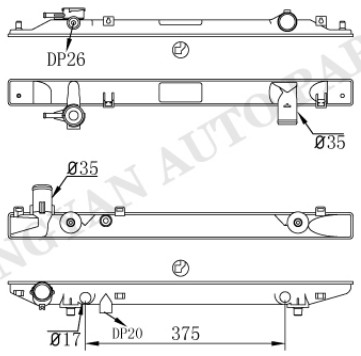

MA-0007AT/MT

Tank size :(R6.5×5×5×49.5×648.5)
OEM :
DPI :
NISSENS :
APPLICATION :
99-05 MAZDA B2500 2.5L(DIESEL)
99-07 MAZDA BOUNTY
06-11 MAZDA BT-50
96-07 MAZDA DRIFTER
96-07 MAZDA FROCEED

MA-0008

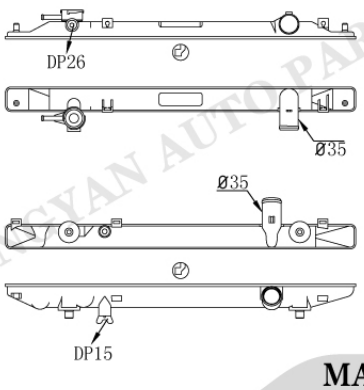

MA-0009

Tank size :(R10×4×5×46×658)
OEM :
DPI :
NISSENS :
APPLICATION :
99-05 MAZDA B2500 2.5L(DIESEL)
99-07 MAZDA BOUNTY
06-11 MAZDA BT-50
96-07 MAZDA DRIFTER
96-07 MAZDA FROCEED

MA-0008

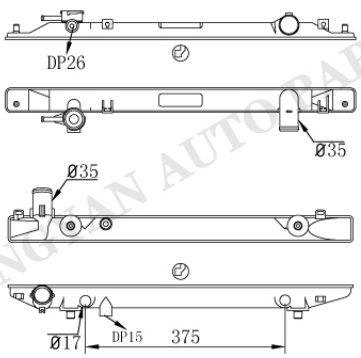

MA-0010AT/MT

Tank size :(R10×4×5×46×658)
OEM :
DPI :
NISSENS :
APPLICATION :
99-05 MAZDA B2500 2.5L(DIESEL)
99-07 MAZDA BOUNTY
06-11 MAZDA BT-50
96-07 MAZDA DRIFTER
96-07 MAZDA FROCEED

MA-0011

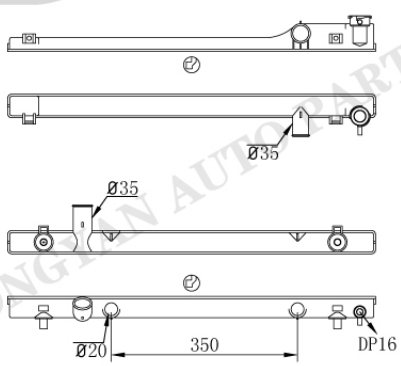

MA-0012AT/MT

Tank size :(R8×4.5×4×46.5×691)
OEM :JE48152000 JE4915200
JE49152000 MA3010213
DPI :1307
NISSENS :
APPLICATION :
92-95 MAZDA 929 3.0L

HONGYAN AUTOPARTS

MAZDA

MA-0013

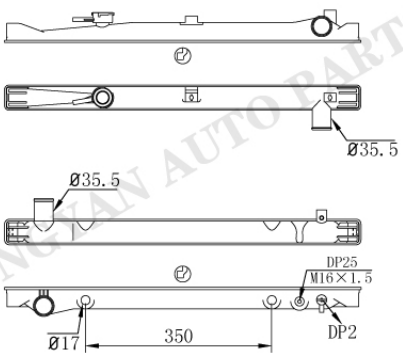

MA-0014AT/MT

Tank size :(R8×5×5×47×669)
OEM :252187 8601081 G601152000 G602152000/A/B JE1515200A/B JE1615200A/C/D/E
DPI :1244 2179 2063 2178
NISSENS :
APPLICATION :
89-98 MAZDA MPV 2.6/3.0L

MA-0015

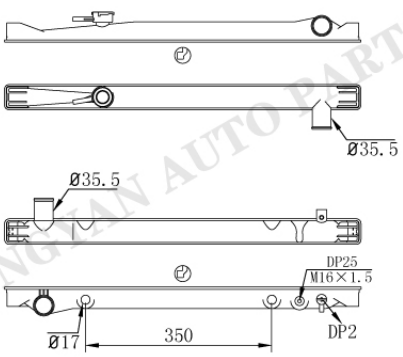

MA-0014AT/MT

Tank size :(R8×5×5×47×669)
OEM :G60715200A G61315200A
DPI :1424 1560
NISSENS :
APPLICATION :
89-93 MAZDA B2600 2.6L

MA-0016

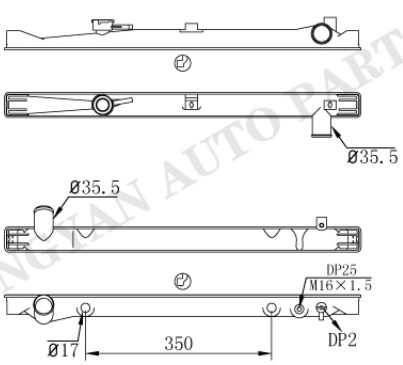

MA-0017AT/MT

Tank size :(R8×5×5×47×669)
OEM :
DPI :
NISSENS :
APPLICATION :
91-98 MAZDA MPV

MA-0018

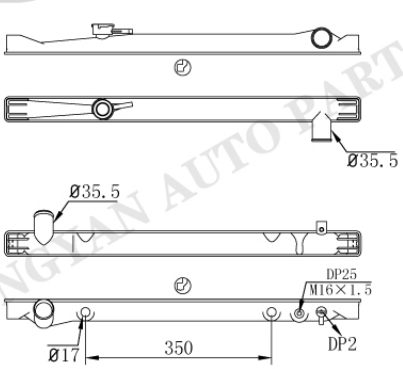

MA-0017AT/MT

Tank size :(R8×5×5×47×669)
OEM :
DPI :
NISSENS :
APPLICATION :
91-98 MAZDA MPV

HONGYAN AUTO PARTS

MA-0016

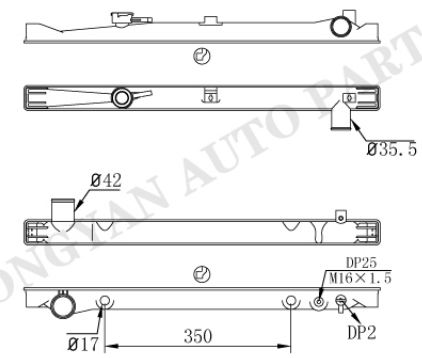

MA-0019AT/MT

Tank size :(R8×5×5×47×669)
OEM :
DPI :
NISSENS :
APPLICATION :
91-98 MAZDA MPV

MA-0020

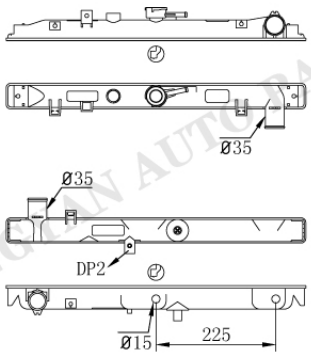

MA-0021AT/MT

Tank size :(R8.5×4×5×48×563)
OEM :
DPI :
NISSENS :
APPLICATION :
96-99 MAZDA 323
96-99 MAZDA BONGO

MA-0022

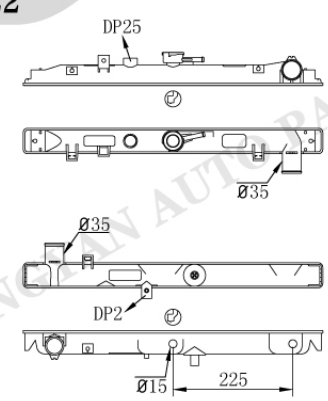

MA-0021AT/MT

Tank size :(R8.5×4×5×48×563)
OEM :
DPI :
NISSENS :
APPLICATION :
96-99 MAZDA 323
96-99 MAZDA BONGO

MA-0023

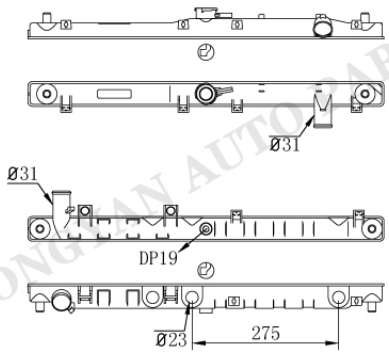

MA-0024AT/MT

Tank size :(R8×5×4×47×669)
OEM :BP4W15200A BP4X15200A
BP6H15200 BP8J15200A
DPI :2268 2277
NISSENS :62467
APPLICATION :
99-05 MAZDA MIATA/MX-5 1.8L

MAZDA

MA-0025

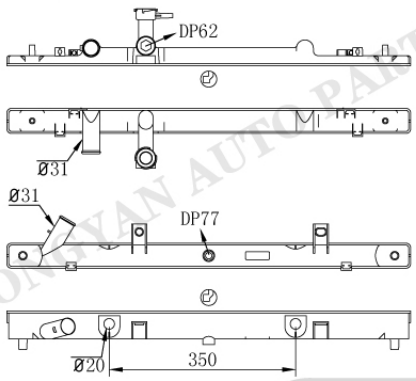

MA-0026AT/MT

Tank size :(R8×5×4×47×758)
OEM :L32115200C
DPI :
NISSENS :69466
APPLICATION :
02-08 MAZDA 6 2.3L

MA-0027

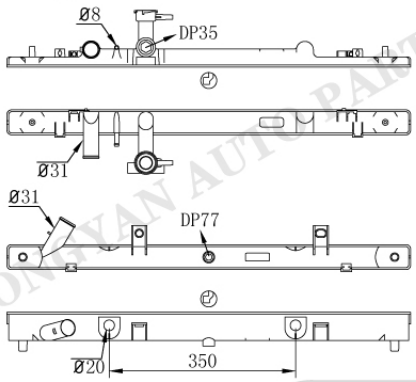

MA-0026AT/MT

Tank size :(R8×5×4×47×758)
OEM :L32115200D/E L32215200E
L3K915200C/D L3R115200A
DPI :2673
NISSENS :62465A 62464A
APPLICATION :
03-08 MAZDA 6 2.3L
03-08 MAZDA ATENZA 2.3L

MA-0028

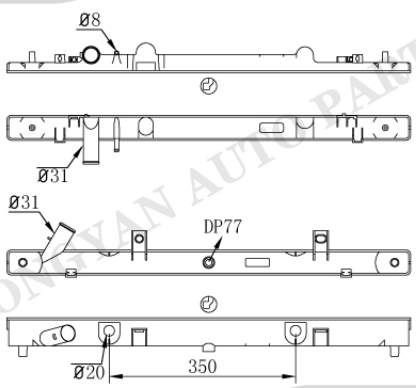

MA-0026AT/MT

Tank size :(R8×5×4×47×758)
OEM :
DPI :
NISSENS :
APPLICATION :
03-08 MAZDA 6 2.3L

MA-0029

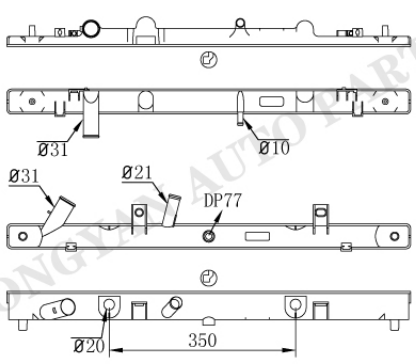

MA-0030AT/MT

Tank size :(R8×5×4×47×758)
OEM :AJ5715200E AJ5815200E/G/A
DPI :2672
NISSENS :
APPLICATION :
03-08 MAZDA 6 3.0L

MA-0031

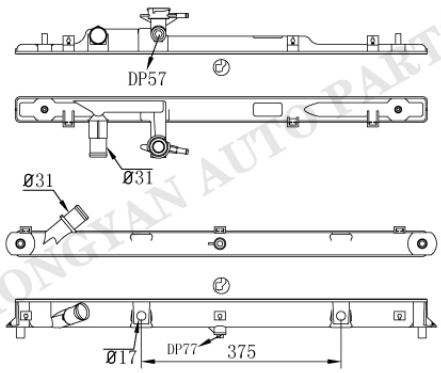

MA-0032AT/MT

Tank size :(R9×4×5×48×774)
OEM :L33L15200
DPI :2918
NISSENS :68524
APPLICATION :
07-12 MAZDA CX-7 2.3L

MA-0033

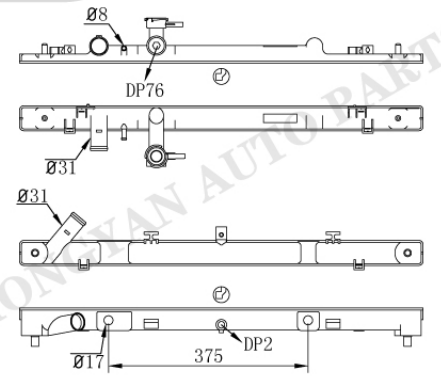

MA-0034AT/MT

Tank size :(R8×5×4×47×758)
OEM :LF4J15200/B LFY115SB0
DPI :
NISSENS :68507 68508
APPLICATION :
07-13 MAZDA 6 1.8L

MA-0033

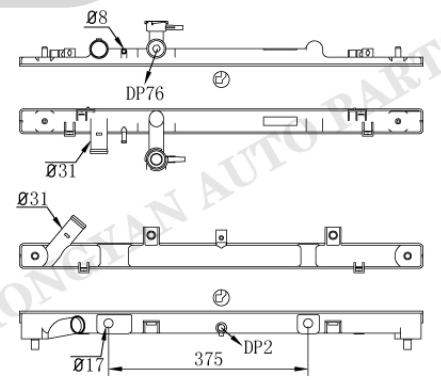

MA-0035AT/MT

Tank size :(R8×5×4×47×758)
OEM :
DPI :
NISSENS :
APPLICATION :
07-13 MAZDA 6 1.8L

Tank size :
OEM :
DPI :
NISSENS :
APPLICATION :

HONGYAN AUTO PARTS

MAZDA

MA-0038

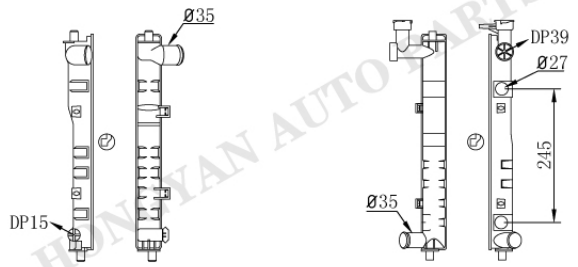

MA-0039AT/MT

Tank size :(R8×5×4.5×48×405)
OEM :
DPI :
NISSENS :
APPLICATION :

MA-0040

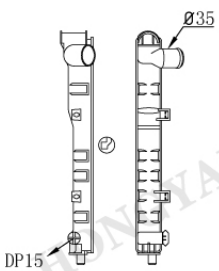

Tank size :(R8×5×4.5×48×405)
OEM :
DPI :
NISSENS :
APPLICATION :

MA-0042

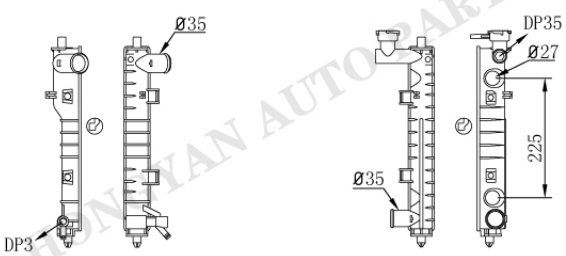

MA-0043AT/MT

Tank size :(R6.5×5×5×50×346.5)
OEM :FP5915200 FS2015200D/E/F/G/H
DPI :1323 1509
NISSENS :62392A 62393A
APPLICATION :
93-97 MAZDA 626 2.0L
92-97 MAZDA MX-6 2.0/2.2L

MA-0044

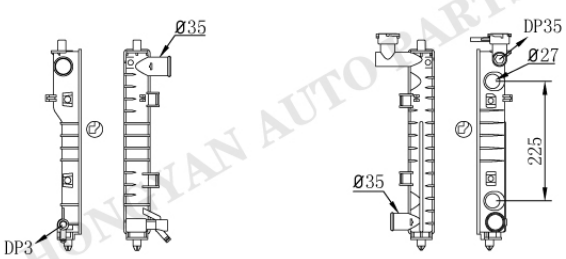

MA-0043AT/MT

Tank size :(R6.5×5×5×50×346.5)
OEM :
DPI :1324
NISSENS :
APPLICATION :
93-97 MAZDA 626 2.0L
92-97 MAZDA MX-6 2.0/2.2L

HUNYAN AUTO PARTS

MA-0046

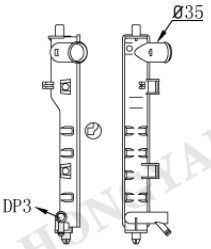

Tank size :(R6.5×5×5×47×361)
OEM :FSD15200/A FSD715200/A
DPI :2008
NISSENS :
APPLICATION :
98-00 MAZDA 626 2.0L

MA-0048

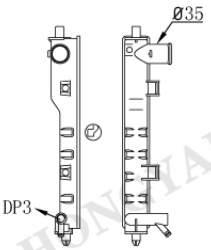

Tank size :(R6.5×5×5×47×361)
OEM :
DPI :
NISSENS :
APPLICATION :
98-00 MAZDA 626 2.0L

MA-0050

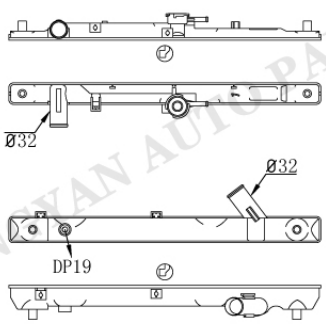

Tank size :(R8×5×5×40/50×586)
OEM :
DPI :
NISSENS :
APPLICATION :
90-95 MAZDA 323 1.3L
90-94 MAZDA PROTEGE 1.3L

MA-0051

MA-0050

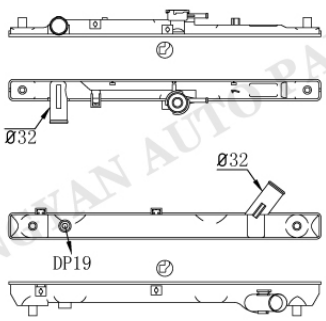

Tank size :(R8×5×5×40/50×586)
OEM :
DPI :
NISSENS :624091
APPLICATION :
90-95 MAZDA 323 1.3L
90-94 MAZDA PROTEGE 1.3L

MA-0052

HONGYAN AUTO PARTS

MAZDA

MA-0053AT/MT

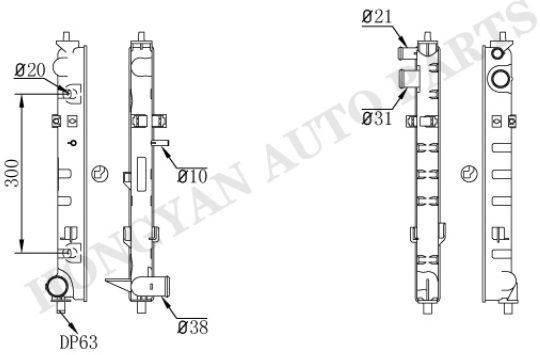

MA-0054

Tank size :(R8×5×4×46×481)
OEM :GY0115200D GY01152300B
GY0315200B
DPI :2330
NISSENS :
APPLICATION :
00-01 MAZDA MPV 2.5L

MA-0055AT/MT

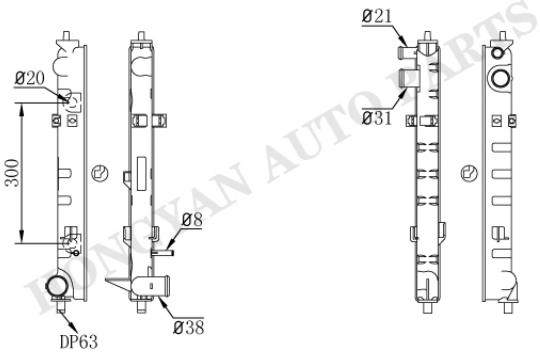

MA-0054

Tank size :(R8×5×4×46×481)
OEM :AJ5115200B AJ5215200A
DPI :2456 2768 2844
NISSENS :
APPLICATION :
02-06 MAZDA MPV 3.0L

MA-0056AT/MT

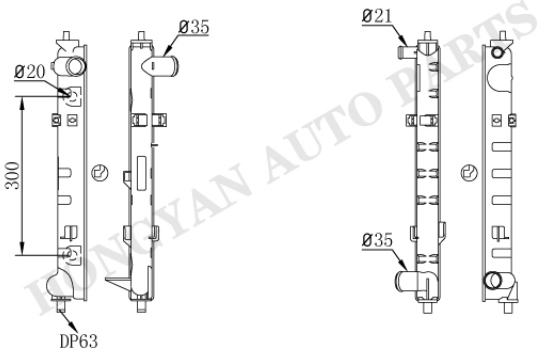

MA-0057

Tank size :(R8×5×4×46×481)
OEM :
DPI :
NISSENS :
APPLICATION :
02-06 MAZDA MPV 3.0L

MA-0058AT/MT

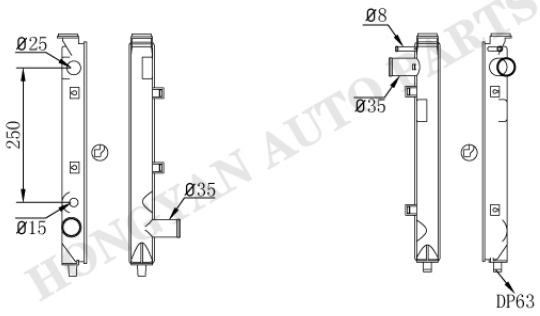

MA-0059

Tank size :(R7×5×5×47×416)
OEM :KL4715200A KL8115200/A
N3A115200/ N3A215200A
DPI :2065
NISSENS :
APPLICATION :
95-02 MAZDA MILLENIA 2.3/2.5L

HUNGYAN AUTO PARTS

MA-0060

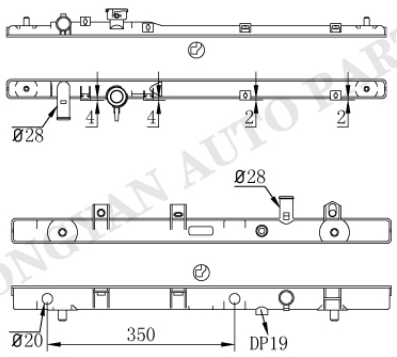

MA-0061AT/MT

Tank size :(R8.5×5×4.5×47×713)
OEM : B35S15200C FS7P15200A/B/C
FS8M15200A/B ZL0115200A
DPI :2303
NISSENS :
APPLICATION :
99-03 MAZDA PROTÉGÉ 1.6/2.0L

MA-0060

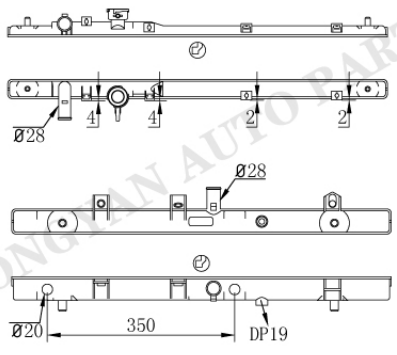

MA-0062AT/MT

Tank size :(R8.5×5×4.5×47×713)
OEM :
DPI :
NISSENS :
APPLICATION :
99-03 MAZDA PROTÉGÉ 1.6/2.0L

MA-0063

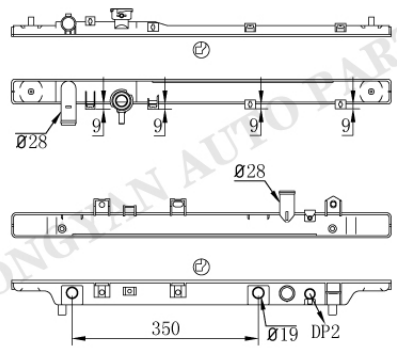

MA-0064AT/MT

Tank size :(R8.5×5×4.5×47×713)
OEM :B68F15200G/J B68G15200F
B6DA15200A B8BG15200F
BPD315200H BPD415200G/H
DPI :1704 1832
NISSENS :62384
APPLICATION :
95-98 MAZDA PROTEGE 1.5/1.8L

MA-0065

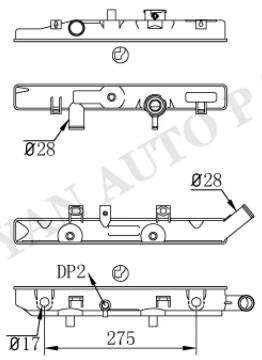

MA-0066AT/MT

Tank size :(R9×4×5×48×400)
OEM :B5C715200A/B B5C815200C
DPI :
NISSENS :62455A
APPLICATION :
98-99 MAZDA 121 1.3/1.5L
98-99 MAZDA DEMIO 1.3/1.5L

HONGYAN AUTO PARTS

MAZDA

MA-0067

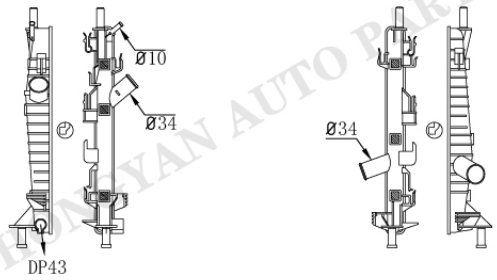

MA-0068

Tank size :(R12×4×5×37×390.5)
OEM :L33X15200 Z60215200/C
DPI :2696
NISSENS :
APPLICATION :
04-09 MAZDA 3 2.0/2.3L

MA-0069

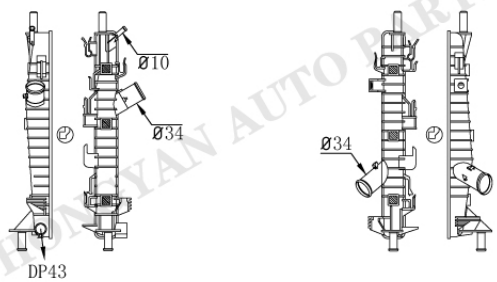

MA-0070

Tank size :(R12×3.5×5×43.8×389)
OEM :1305492 1309414
1318177 30665934/6
3M5H8005RG/H/J/K
DPI :
NISSENS :69256
APPLICATION :
03-09 MAZDA 3 1.4/1.6L
04-09 MAZDA AXELA 1.4/1.6L
04-15 FORD FOCUS 1.6L
06-12 VOLVO S40 1.6L

MA-0071AT/MT

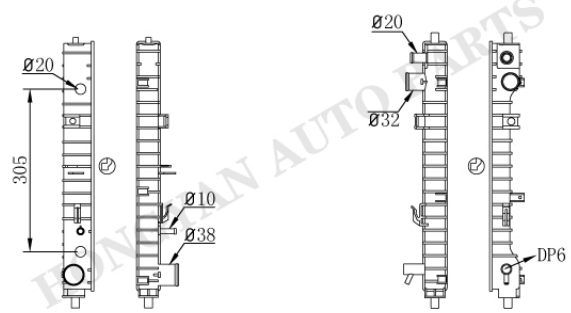

MA-0072

Tank size :(R6.5×5×5×46×469)
OEM :4L8Z8005KA/LA AJ0315200/A
YL8Z8005KB/LB ZZC215200
DPI :2307
NISSENS :
APPLICATION :
01-06 MAZDA TRIBUTE 3.0L
01-08 FORD ESCAPE 3.0L
05-08 MERCURY MARINER 3.0L

MA-0073AT/MT

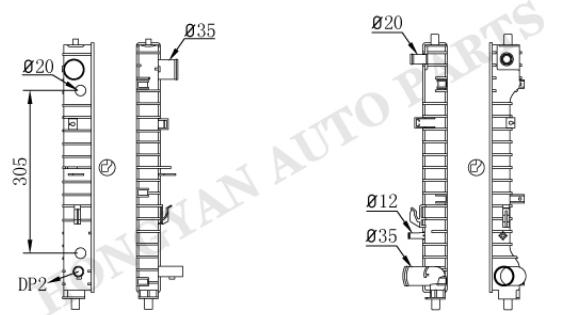

MA-0074

Tank size :(R6.5×5×5×46×469)
OEM :4L8Z8005JA/KA 5L8Z8005AA
6L8Z8005AA/BA YF0915200/A
DPI :2306
NISSENS :
APPLICATION :
01-06 MAZDA TRIBUTE 2.0L
01-08 FORD ESCAPE 2.0L

HUNGYAN AUTO PARTS

MA-11

MA-0075

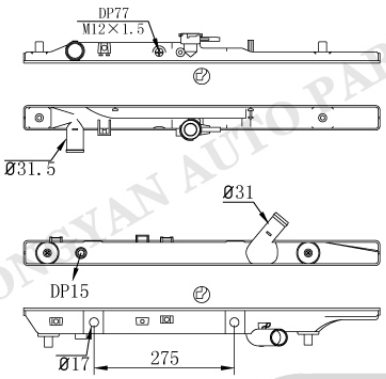

MA-0076AT/MT

Tank size :(R8×5×4×47×669)
OEM :B55715200B/C/D
DPI :
NISSENS :62378
APPLICATION :
90-95 MAZDA 323 1.6/1.8L
90-94 MAZDA PROTEGE 1.8L

MA-0077

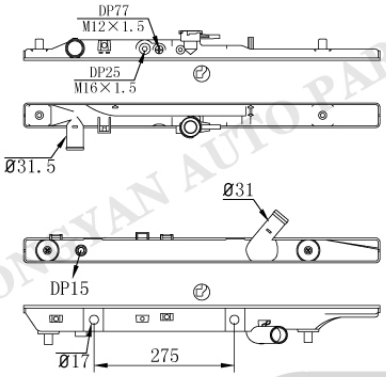

MA-0076AT/MT

Tank size :(R8×5×4×47×669)
OEM :0K20115200A/B 0K20415200A
0K20615200A B38815200C
DPI :1135
NISSENS :
APPLICATION :
90-95 MAZDA 323 1.6/1.8L
90-94 MAZDA PROTEGE 1.8L

MA-0078

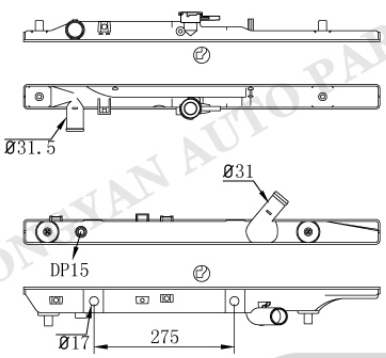

MA-0076AT/MT

Tank size :(R8×5×4×47×669)
OEM :
DPI :1134
NISSENS :
APPLICATION :
90-95 MAZDA 323 1.6/1.8L
90-94 MAZDA PROTEGE 1.8L

MA-0079

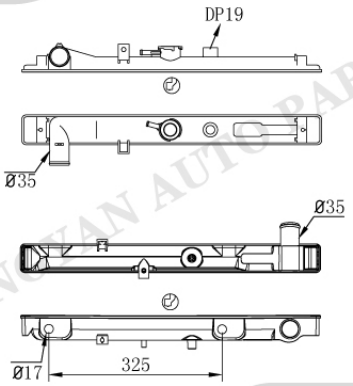

MA-0080AT/MT

Tank size :(R9×4×5×55×563)
OEM :25215I00B
DPI :
NISSENS :
APPLICATION :
96-99 MAZDA BONGO

HONGYAN AUTO PARTS

MAZDA

MA-0081

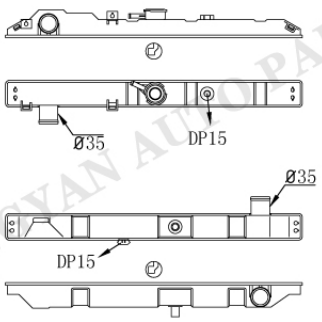

MA-0082

Tank size :(R7×5×5×50×557.5)
OEM :R2LI15200A R2M115200A
DPI :
NISSENS :
APPLICATION :
87- MAZDA E2000

MA-0083

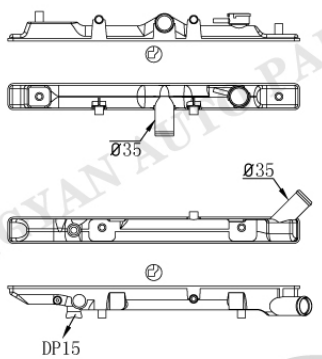

MA-0084

Tank size :(R10×4.5×5×49.5×548)
OEM :
DPI :
NISSENS :
APPLICATION :
86-89 MAZDA 323

MA-0085

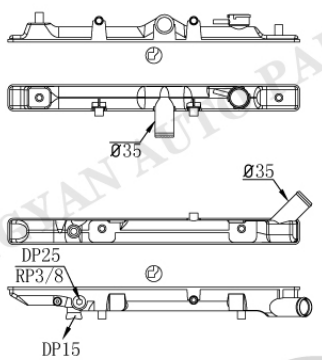

MA-0086

Tank size :(R10×4.5×5×49.5×548)
OEM :E7GZ8005A
DPI :243 242
NISSENS :62504
APPLICATION :
86-89 MAZDA 323

MA-0085

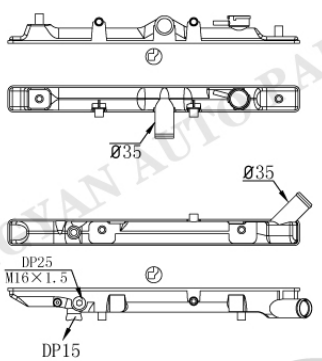

MA-0087

Tank size :(R10×4.5×5×49.5×548)
OEM :E7GZ8005A
DPI :243 242
NISSENS :
APPLICATION :
86-89 MAZDA 323

HONGYAN AUTO PARTS

MA-0088

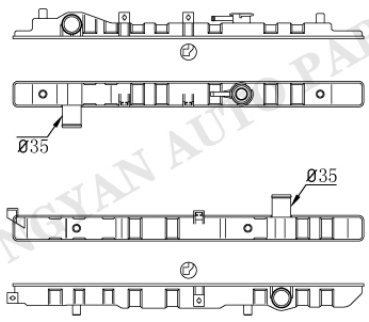

MA-0089

Tank size :(R9×4×5×48×660)
OEM :
DPI :
NISSENS :
APPLICATION :
96-02 MAZDA BANTAM

MA-0088

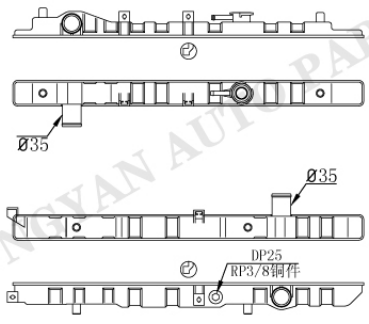

MA-0090

Tank size :(R9×4×5×48×660)
OEM :
DPI :
NISSENS :
APPLICATION :
96-02 MAZDA BANTAM

MA-0091

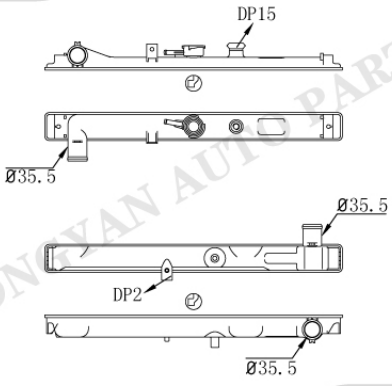

MA-0092

Tank size :(R8.5×5×5×52.5×559)
OEM :R2S215200B/C/D S20715200
DPI :
NISSENS :67358
APPLICATION :
97-03 MAZDA E2200 2.2L(DIESEL)

MA-0093

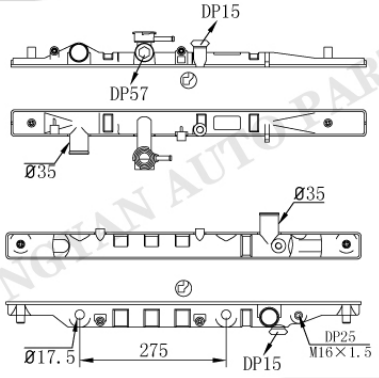

MA-0094AT/MT

Tank size :(R7.5×5×5×50×667)
OEM : AL02152009 AL0280059
E92H8005AA F20115200A/B/D
DPI :248
NISSENS :
APPLICATION :
88-92 MAZDA 626 2.2L
88-92 MAZDA MX-6 2.2L
89-92 FORD PROBE 2.2L

HONGYAN AUTO PARTS

MAZDA

MA-0095

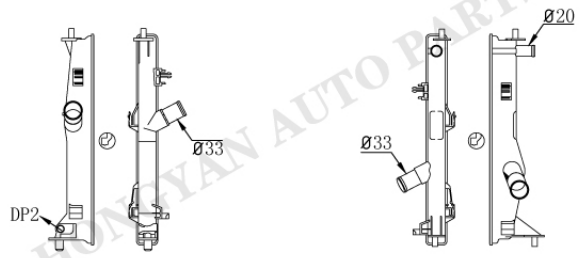

MA-0096

Tank size :(R9×4×5×40/33×400)
OEM :LFB715200A
DPI :2894
NISSENS :68503
APPLICATION :
06-10 MAZDA 5 2.3L

MA-0097

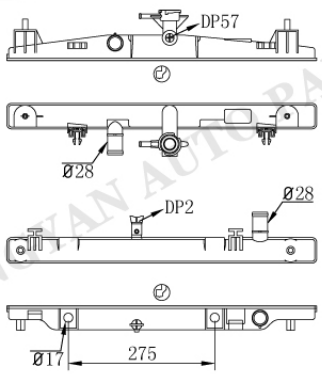

MA-0098AT/MT

Tank size :(R9×4×5×48×582)
OEM :ZJ3815200 ZJ3815200A
DPI :
NISSENS :68504 68505
APPLICATION :
07-15 MAZDA 2 1.3/1.5L
07-15 MAZDA DEMIO 1.3/1.5L

MA-0099

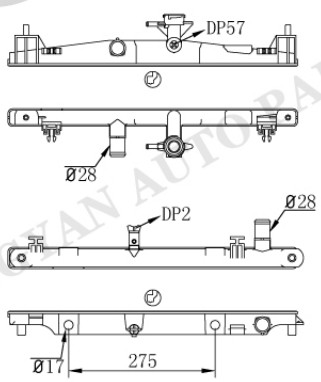

MA-0100AT/MT

Tank size :(R9×4×4.5×33/40×544)
OEM :ZJ3915200A
DPI :
NISSENS :68538
APPLICATION :
07-15 MAZDA 2 1.3/1.5L
07-15 MAZDA DEMIO 1.3/1.5L

MA-0101

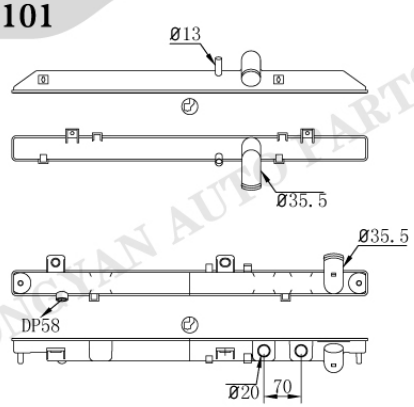

MA-0102AT/MT

Tank size :(R8×5×5×47×668)
OEM : N3H415200C/D N3H615200C/D
DPI :
NISSENS :62458
APPLICATION :
04-08 MAZDA RX-8 1.3L

HONGYAN AUTO PARTS

MA-0103

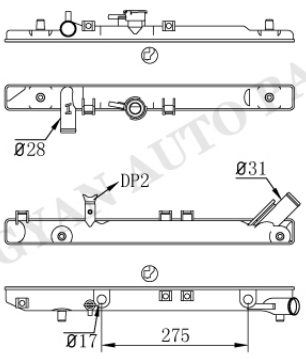

MA-0104AT/MT

Tank size :(R9×4×5×48×544)
OEM :B5C715200D/F
DPI :
NISSENS :
APPLICATION :
MAZDA

MA-0105

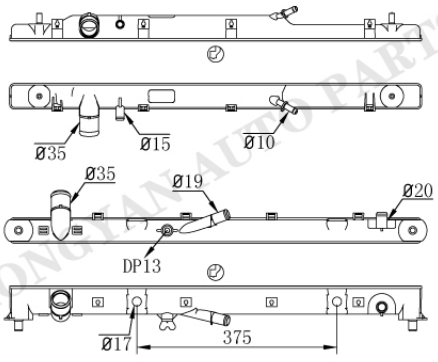

MA-0106AT/MT

Tank size :(R9×4×5×48×774)
OEM :CY0315200F
DPI :2986 2985
NISSENS :68525
APPLICATION :
07-15 MAZDA CX-9 3.7L

MA-0107

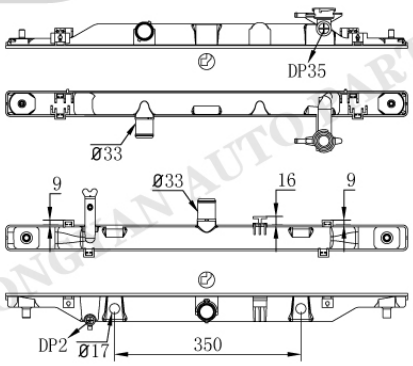

MA-0108AT/MT

Tank size :(R9×4×5×48×755)
OEM :PE0115200A
DPI :13317
NISSENS :68534
APPLICATION :
13-15 MAZDA CX-5 2.0L

MA-0109

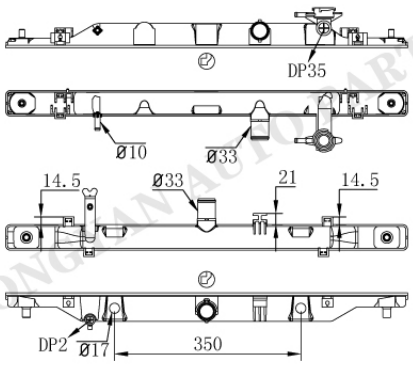

MA-0110AT/MT

Tank size :(R9×4×5×48×755)
OEM :SH0115200A
DPI :
NISSENS :68532
APPLICATION :
13-15 MAZDA CX-5 2.0L

MAZDA

MA-0111

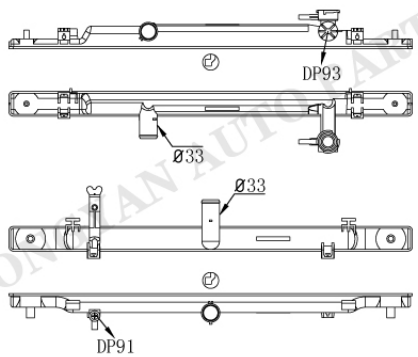

MA-0112

Tank size :(R8.5×5×4×46.5×757.8)
OEM :
DPI :13367
NISSENS :68539
APPLICATION :
14-15 MAZDA 6 2.5L

MA-0113

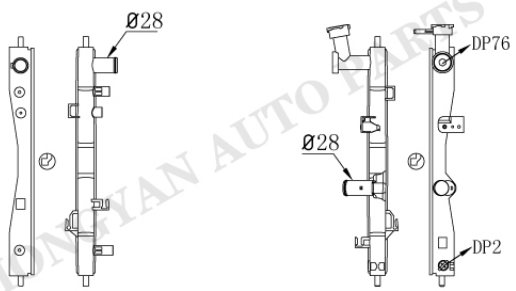

MA-0114

Tank size :(R7.5×4.5×5.5×35×426)
OEM :
DPI :
NISSENS :
APPLICATION :
HAINAN MAZDA

MA-0115

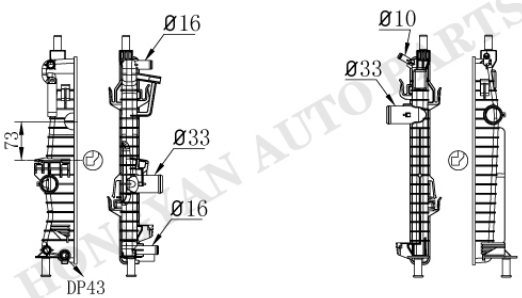

MA-0116

Tank size :(R12×4×5×37×390)
OEM :Z6811520YA
DPI :
NISSENS :68522
APPLICATION :
09-14 MAZDA 3 1.6L

MA-0117

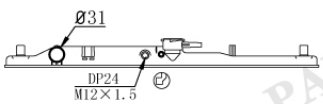

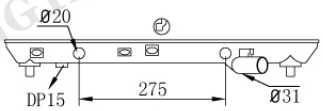

MA-0118AT/MT

Tank size :(R8×5×4.5×46×590)
OEM :
DPI :
NISSENS :
APPLICATION :
90-95 MAZDA 323 1.6/1.8L

HONGYAN AUTO PARTS

MA-17

MA-0119

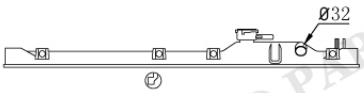

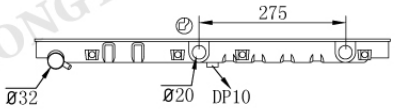

MA-0120AT/MT

Tank size :(R8×4.5×4×46.5×668.5)
OEM :B61P1520/00 B61P152000/B
B64J15200A/C BPE815200
DPI :1140
NISSENS :62447
APPLICATION :
90-97 MAZDA MX-5 MIATA 1.6/1.8L

MA-0121

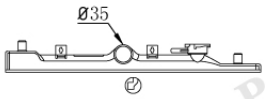

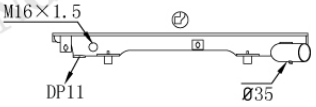

MA-0122

Tank size :(R8.5×5×4.5×36×480)
OEM :E35815200
DPI :
NISSENS :62512
APPLICATION :
85-90 MAZDA 323

MA-0123

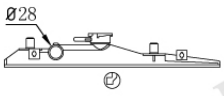

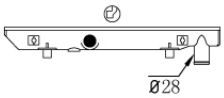

MA-0124

Tank size :(R9×4×5.5×36×406)
OEM :BJ0115200 BJ0415200
B10215200 B11315200
DPI :
NISSENS :62505
APPLICATION :
87-90 MAZDA 121 1.1/1.3L

MA-0125AT/MT

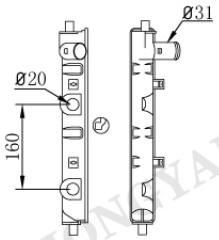

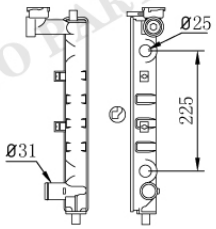

MA-0126AT/MT

Tank size :(R8×4×5×46×366)
OEM :B66T15200C
DPI :1558
NISSENS :
APPLICATION :
92-96 MAZDA MX-3 1.6L

MAZDA

MA-0127

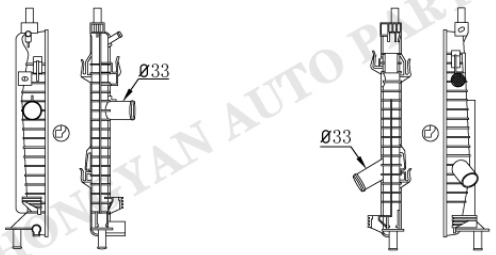

MA-0128

Tank size :(R12×4×5×37.2×388.5)
OEM :LF8B1520Y, Z6681520Y
DPI :
NISSENS :68521
APPLICATION :
10-13 MAZDA 3 2.0L

MA-0127

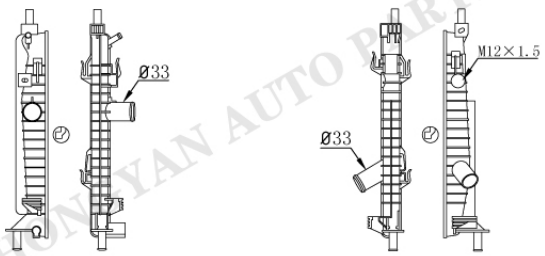

MA-0129

Tank size :(R12×4×5×37.2×388.5)
OEM :LF8M1520YD
DPI :13100
NISSENS :
APPLICATION :
10-13 MAZDA 3 2.0L

MA-0130

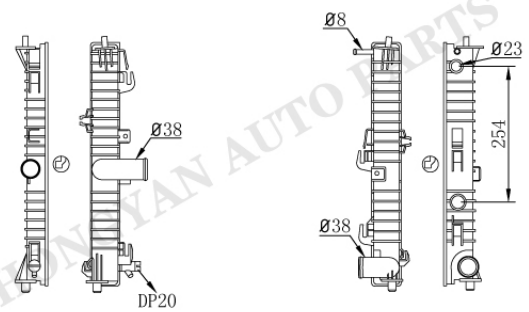

MA-0131AT/MT

Tank size :(R5.5×4×5×55×457.3)
OEM :CA0715200A
DPI :13089
NISSENS :
APPLICATION :
09-10 MAZDA 6 2.5/3.7L

MA-0132

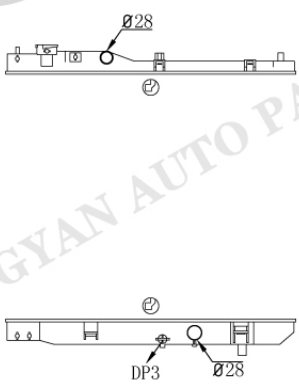

MA-0133

Tank size :(R9×4.1×5×47.9×544.9)
OEM :
DPI :
NISSENS :
APPLICATION :

HONGYAN AUTO PARTS

MA-0134

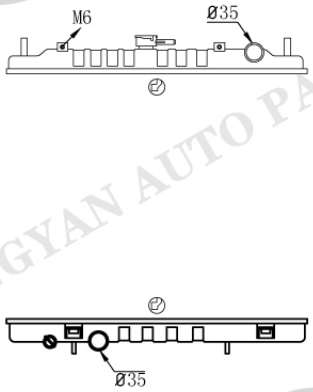

MA-0135

Tank size :(R12×4×4,.5×42×565)
OEM :
DPI :
NISSENS :
APPLICATION :
MAZDA PICKUP

MA-0136AT/MT



MA-0137

Tank size :(R6.5×5×5×50×346.5)
OEM :920W8005CF/DF FS1115200D
KL1115200D KL1215200D
DPI :1326 1510
NISSENS :62486A
APPLICATION :
93-97 MAZDA 626 2.5L
93-97 MAZDA MX-6 2.5L

MA-0138AT/MT



MA-0137

Tank size :(R6.5×5×5×50×346.5)
OEM :KLG415200
DPI :2010 2408
NISSENS :
APPLICATION :
98-02 MAZDA 626 2.5L

MA-0097

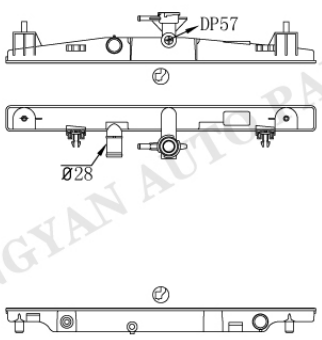

MA-0139

Tank size :(R9×4×5×48×582)
OEM :ZYE920015
DPI :13233
NISSENS :
APPLICATION :
11-15 MAZDA 2 2.5L

HONGYAN AUTO PARTS

MAZDA

MA-0140

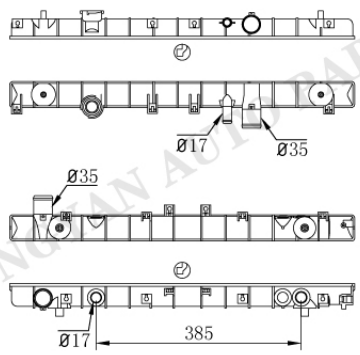

MA-0141AT/MT

Tank size :(R6×5×5×49.5×648.5)
OEM :WL0215200H
DPI :
NISSENS :
APPLICATION :
95-01 MAZDA BONGO

MA-0140

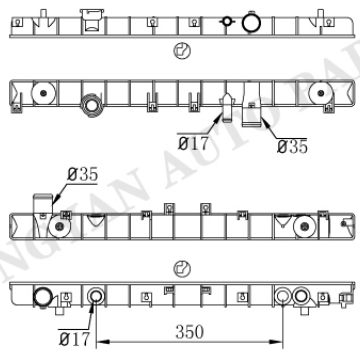

MA-0141-1AT

Tank size :(R6×5×5×49.5×648.5)
OEM :
DPI :
NISSENS :
APPLICATION :
95-01 MAZDA BONGO

MA-0142

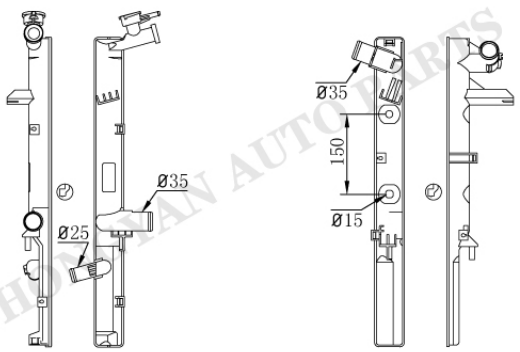

MA-0143AT/MT

Tank size :(R8.5×4×4.5×55×582)
OEM :WL6315200F/G
DPI :
NISSENS :
APPLICATION :
97-99 MAZDA BONGO

MA-0144

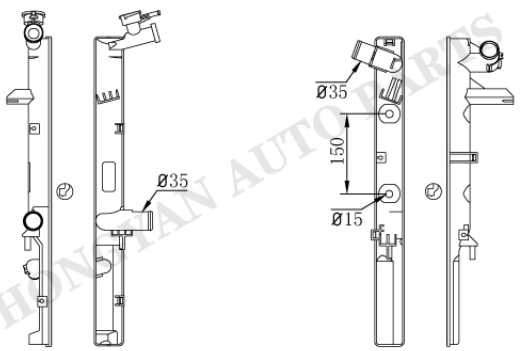

MA-0145AT/MT

Tank size :(R8.5×4×4.5×55×582)
OEM :WLA115200 WL6215200E
DPI :
NISSENS :
APPLICATION :
97-99 MAZDA BONGO

HONGYAN AUTO PARTS

MA-0146AT/MT

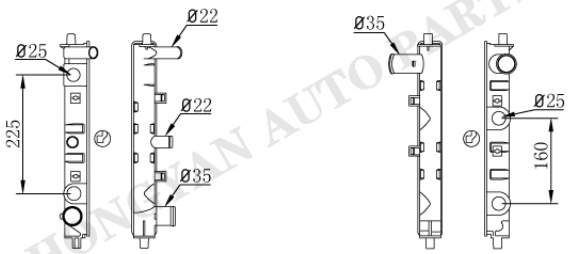

MA-0147AT/MT

Tank size :(R8.5×5×4×46×366)
OEM :K80115200D K80215200E
DPI :1559
NISSENS :
APPLICATION :
92-94 MAZDA MX-3 1.8L

MA-0148

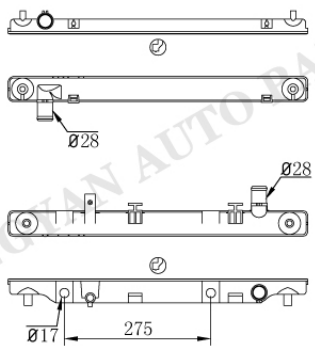

MA-0149AT/MT

Tank size :(R9×4×4.5×48×563)
OEM :ZJ0315200 ZJ0915200
DPI :
NISSENS :
APPLICATION :
04- MAZDA 2
04- MAZDA DEMIO

MA-0150

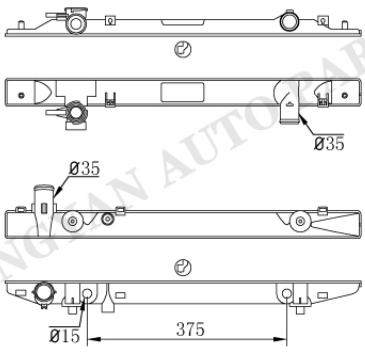

MA-0151AT/MT

Tank size :(R9×5×4×52×669)
OEM :WLVH15200
DPI :
NISSENS :
APPLICATION :
03- MAZDA DRIFTER

MA-0152

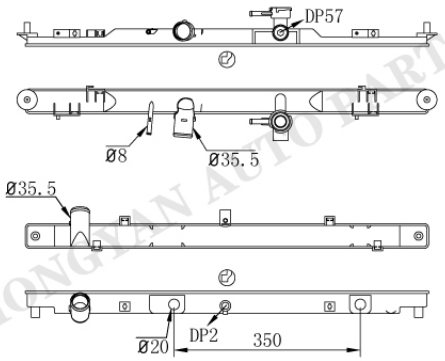

MA-0153AT/MT

Tank size :(R9×5×4.5×47×758)
OEM :L5A415200A
DPI :13389
NISSENS :
APPLICATION :
11-13 MAZDA M6 2.5L

HONGYAN AUTO PARTS

MAZDA

MA-0154

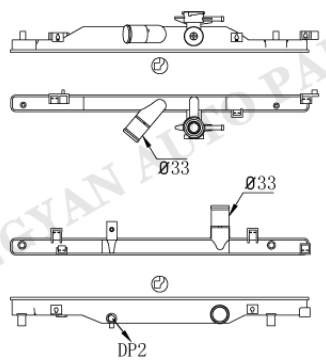

MA-0155

Tank size :(R9×4×5×31×560)
OEM :P31H15201
DPI :
NISSENS :
APPLICATION :

MA-0156

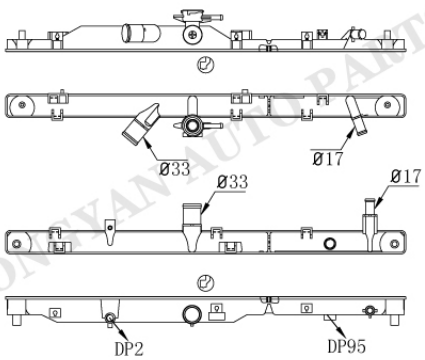

MA-0157

Tank size :(R9×4×5×44×752)
OEM :S55215200
DPI :
NISSENS :
APPLICATION :

MA-0158

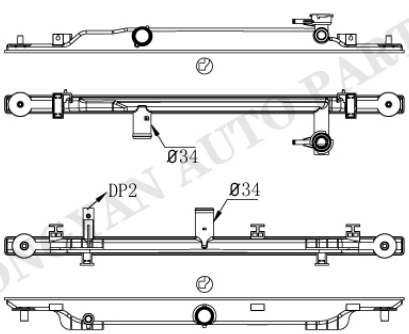

MA-0159

Tank size :(R6×5×4.5×34×750.5)
OEM :PE181520Y MA3010237
DPI :13404
NISSENS :
APPLICATION :
14-15 MAZDA 3 2.0/2.5L

MA-0113

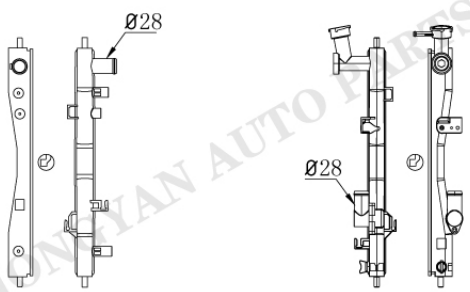

MA-0160

Tank size :(R7.5×4.5×5.5×35×426)
OEM :
DPI :
NISSENS :
APPLICATION :
HAINAN MAZDA

HONGYAN AUTO PARTS

MA-0161 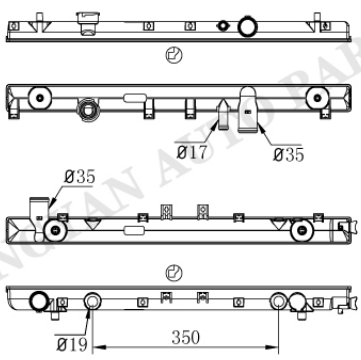 **MA-0162AT/MT**	Tank size :(R6×4.5×5×49.5×649) OEM : DPI : NISSENS : APPLICATION : 95-02 MAZDA BONGO FRENDY
MA-0161 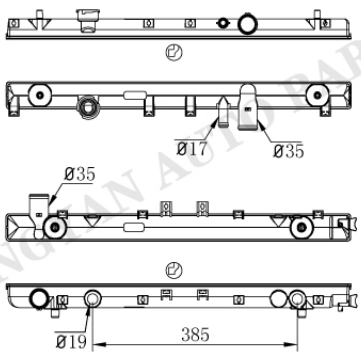 **MA-0163AT/MT**	Tank size :(R6×4.5×5×49.5×649) OEM : DPI : NISSENS : APPLICATION : 95-02 MAZDA BONGO FRENDY
MA-0164 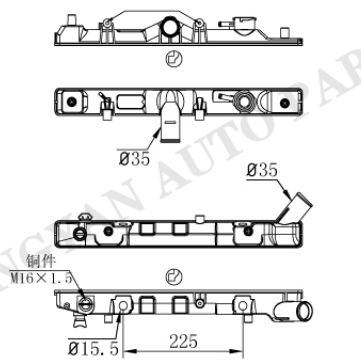 **MA-0165AT/MT**	Tank size :(R8.5×5×4.5×49.5×466) OEM :E35815200B DPI : NISSENS : APPLICATION : MAZDA 323
MA-0166 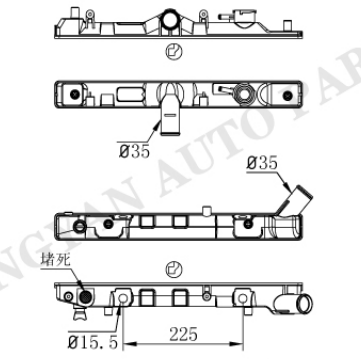 **MA-0167AT/MT**	Tank size :(R8.5×5×4.5×49.5×466) OEM : DPI : NISSENS : APPLICATION : MAZDA 323

HONGYAN AUTO PARTS

MAZDA

MA-0168

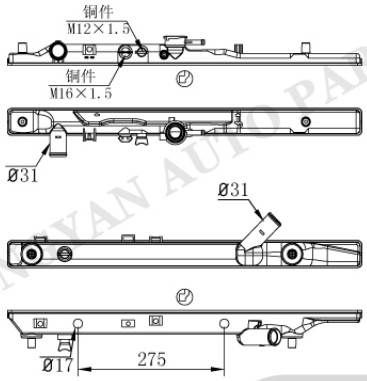

MA-0169AT/MT

Tank size :(R8×5×5×49.5×666)
OEM :
DPI :
NISSENS :
APPLICATION :
90-94 MAZDA 323

MA-0170

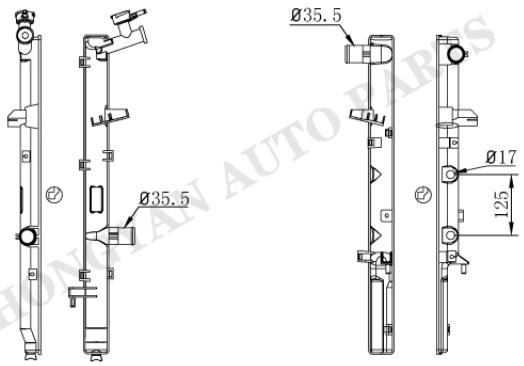

MA-0171AT/MT

Tank size :(R9×4×5×54.5×659)
OEM :
DPI :
NISSENS :
APPLICATION :
MAZDA

MA-0172

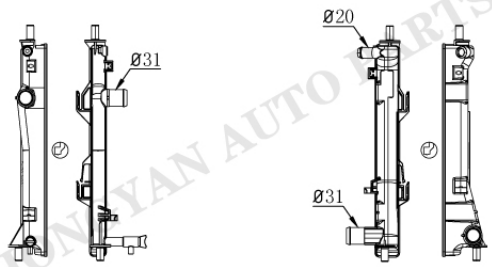

MA-0173

Tank size :(R9×4×4.5×33/48×400)
OEM :LFFM15200A/B LFYA15SB0
DPI :13220
NISSENS :68528
APPLICATION :
12-15 MAZDA 5 2.5L

MA-0174

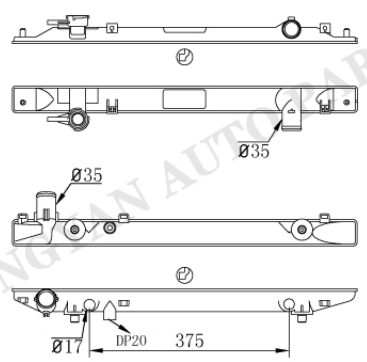

MA-0007AT/MT

Tank size :(R6.5×5×5×49.5×648.5)
OEM :
DPI :
NISSENS :
APPLICATION :

MA-0175

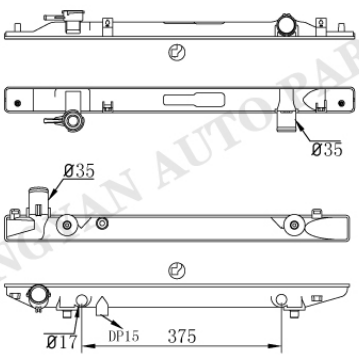

MA-0010AT/MT

Tank size :(R6.5×4×5×46×658)
OEM :
DPI :
NISSENS :
APPLICATION :

MA-0176

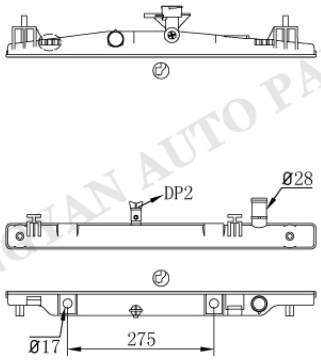

MA-0098AT/MT

Tank size :(R9×4×5×48×582)
OEM :
DPI :
NISSENS :
APPLICATION :
07- MAZDA 2 1.3/1.5L

MA-0177

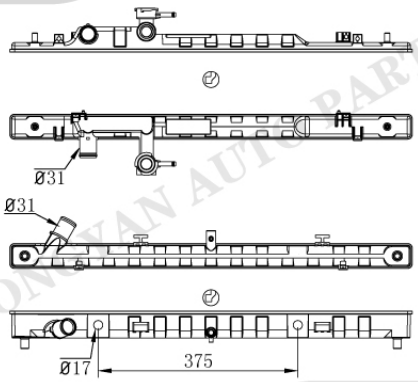

MA-0178AT/MT

Tank size :(R9×5×5.5×47×756)
OEM :
DPI :
NISSENS :
APPLICATION :

MA-0179

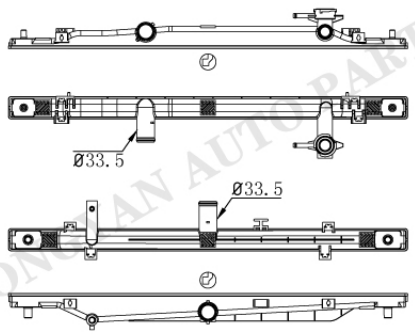

MA-0180

Tank size :(R5×4×5×42×750)
OEM :
DPI :
NISSENS :
APPLICATION :

HONGYAN AUTO PARTS

MAZDA

MA-0158

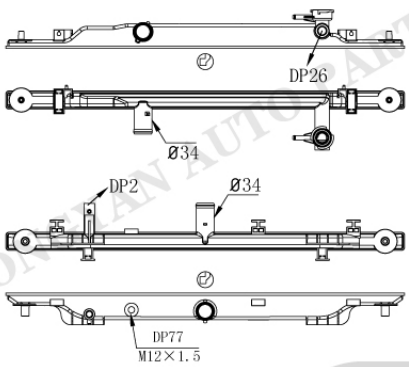

MA-0181

Tank size :(R6×5×4.5×34×750.5)
OEM :MA3010237 PE181520Y
DPI :13404
NISSENS :
APPLICATION :
14-15 MAZDA 3 2.0/2.5L

MA-0182

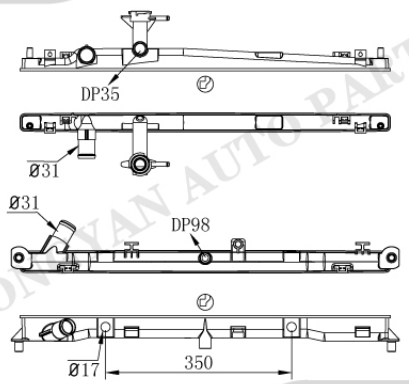

MA-0183AT/MT

Tank size :(R9×4×4.5×33/40×697)
OEM :LF2115200 LF2115200A
DPI :
NISSENS :
APPLICATION :
02-07 MAZDA 6/ATENZA

MA-0184

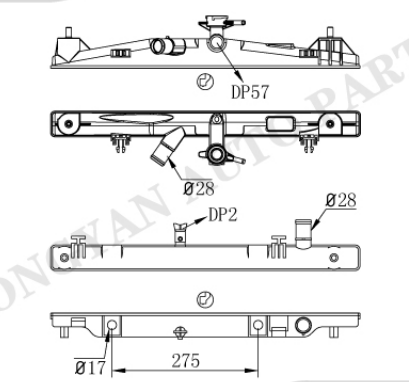

MA-0098AT/MT

Tank size :(R9×4×5×48×582)
OEM :P30115200
DPI :
NISSENS :
APPLICATION :
MAZDA 2 DEMIO

MA-0185

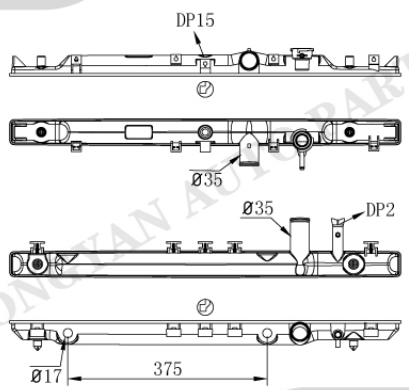

MA-0186AT/MT

Tank size :(R8.5X4X5X47.5X735.8)
OEM :
DPI :
NISSENS :
APPLICATION :
MAZDA

HONGYAN AUTO PARTS

MAZDA

MA-0187

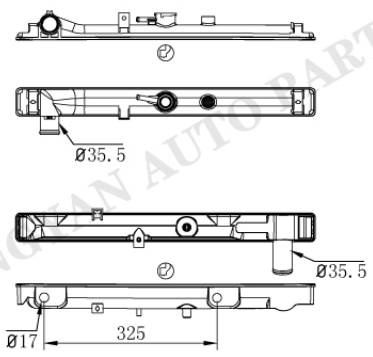

MA-0188AT/MT

Tank size :(R8.5×4×4.5×54×563)
OEM :
DPI :
NISSENS :
APPLICATION :

MA-0189

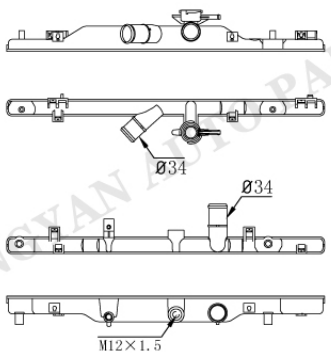

MA-0190

Tank size :(R9×4×4.5×31.2×598)
OEM :
DPI :
NISSENS :
APPLICATION :
MAZDA CX3

MA-0189

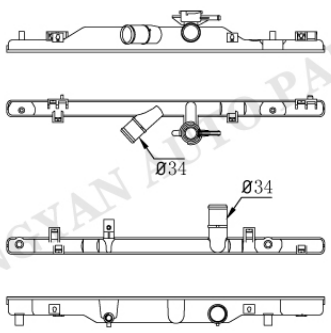

MA-0191

Tank size :(R9×4×4.5×31.2×598)
OEM :
DPI :
NISSENS :
APPLICATION :
MAZDA CX3

MA-0136AT/MT

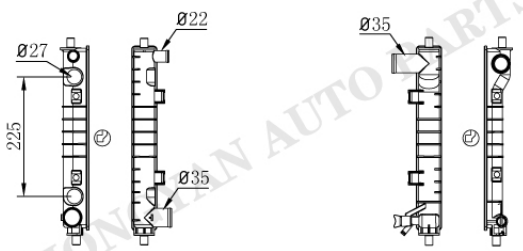

MA-0192

Tank size :(R6.5×5×5×50×346.5)
OEM :F32Z8005C/D
F32H8005CH/CJ/DH
F42Z8005A/KL1615200E
DPI :1325
NISSENS :
APPLICATION :
93-97 MAZDA 626 2.5L
93-97 MAZDA MX-6 2.5L

HONGYAN AUTO PARTS

MAZDA

MA-0193

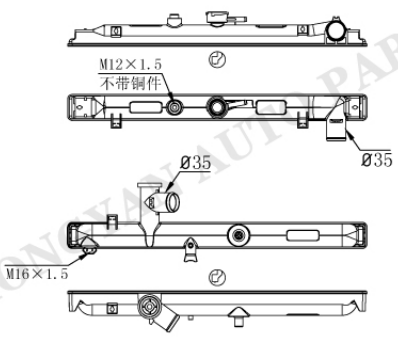

MA-0194

Tank size :(R9×4×5×47.5×563)
OEM :
DPI :
NISSENS :
APPLICATION :
MAZDA

MA-0195

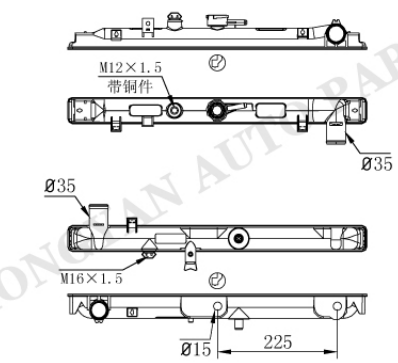

MA-0196AT/MT

Tank size :(R9×4×5×47.5×563)
OEM :B5D915200B B5D815200A
DPI :
NISSENS :
APPLICATION :
96-99 MAZDA BONGO SE888

MA-0195

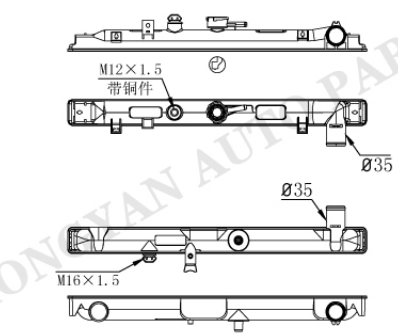

MA-0197

Tank size :(R9×4×5×47.5×563)
OEM :RF0115200E VS0115200B
DPI :
NISSENS :
APPLICATION :
88-96 MAZDA E2200

MA-0198

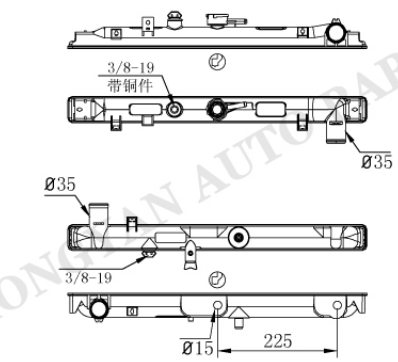

MA-0199AT/MT

Tank size :(R9×4×5×47.5×563)
OEM :F81F15200A
DPI :
NISSENS :
APPLICATION :
96-99 MAZDA BONGO SE88T

HONGYAN AUTO PARTS

MA-0200

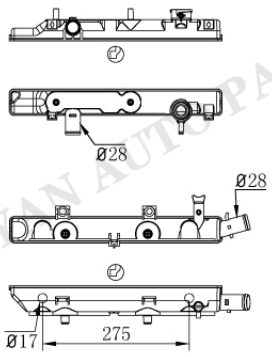

MA-0201AT/MT

Tank size :(R9×4×4×48×400)
OEM :
DPI :
NISSENS :
APPLICATION :
98- DEMIO PW3W

MA-0200

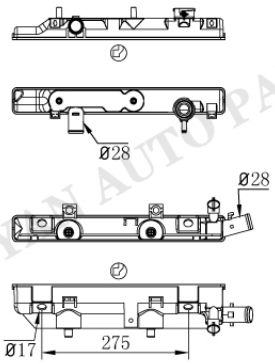

MA-0202AT/MT

Tank size :(R9×4×4×48×400)
OEM :B5D915200BA
DPI :
NISSENS :
APPLICATION :
96-11 METRO 5DR

MA-0203

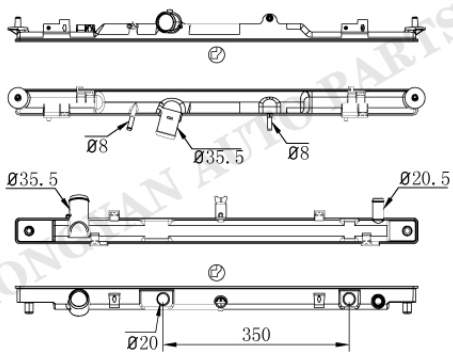

MA-0204AT/MT

Tank size : (R8.5×5.2×4.5×47×757)
OEM :
DPI :
NISSENS :
APPLICATION :
11-13 MAZDA 6 2.5L

MA-0205

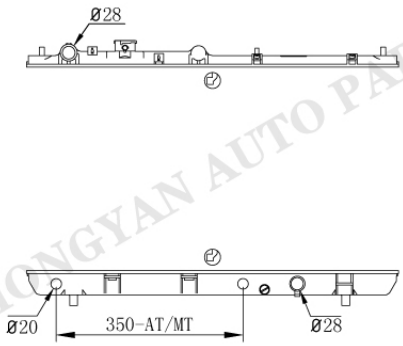

MA-0206AT/MT

Tank size :(R8×5×5×48×698)
OEM :
DPI :2303
NISSENS :
APPLICATION :
99-03 MAZDA PROTÉGÉ 1.6/2.0L

HONGYAN AUTO PARTS

MAZDA

MA-0207

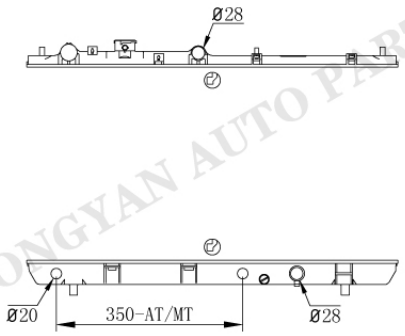

MA-0206AT/MT

Tank size :(R8×5×5×48×698)
OEM :RF1S15200A
DPI :
NISSENS :
APPLICATION :
98- MAZDA 323/323F 2.0L

MA-0208

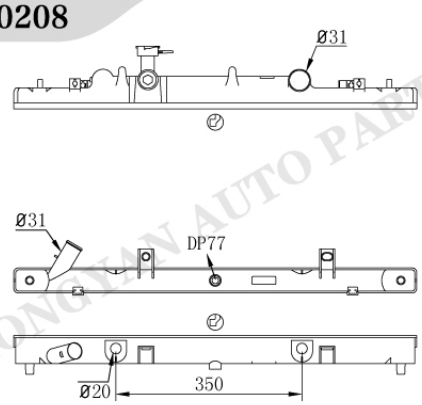

MA-0026AT/MT

Tank size :(R8×5×4×47×758)
OEM :
DPI :
NISSENS :
APPLICATION :
03-08 MAZDA 6 2.3L
03-08 MAZDA ATENZA 2.3L

Tank size :
OEM :
DPI :
NISSENS :
APPLICATION :

Tank size :
OEM :
DPI :
NISSENS :
APPLICATION :

HONGYAN AUTO PARTS

	Tank size : OEM : DPI : NISSENS : APPLICATION :
	Tank size : OEM : DPI : NISSENS : APPLICATION :
	Tank size : OEM : DPI : NISSENS : APPLICATION :
	Tank size : OEM : DPI : NISSENS : APPLICATION :

HONGYAN AUTO PARTS

	Tank size : OEM : DPI : NISSENS : APPLICATION :
	Tank size : OEM : DPI : NISSENS : APPLICATION :
	Tank size : OEM : DPI : NISSENS : APPLICATION :
	Tank size : OEM : DPI : NISSENS : APPLICATION :

HONGYAN AUTO PARTS

MERCEDES BENZ

ME-0001

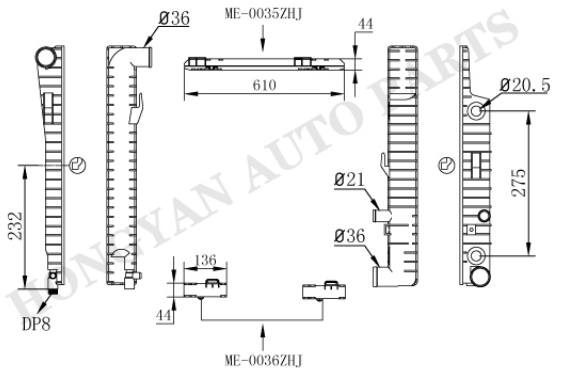

ME-0002AT/MT

Tank size :(R5×4×5×56.5×448.5)
OEM :2025002203 2025006703
A2025002203 A2025006703
DPI :1844
NISSENS :62756A
APPLICATION :
94-96 MERCEDES BENZ C220 2.2L
97-99 MERCEDES BENZ C280 2.8L

ME-0001-1

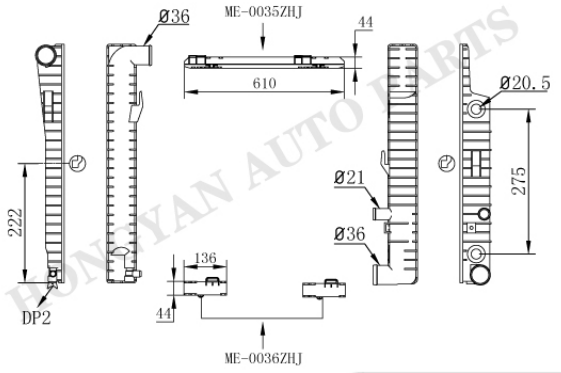

ME-0002AT/MT

Tank size :(R5×4×5×56.5×448.5)
OEM :
DPI :
NISSENS :
APPLICATION :
94-96 MERCEDES BENZ C220 2.2L
97-99 MERCEDES BENZ C280 2.8L

ME-0001-2

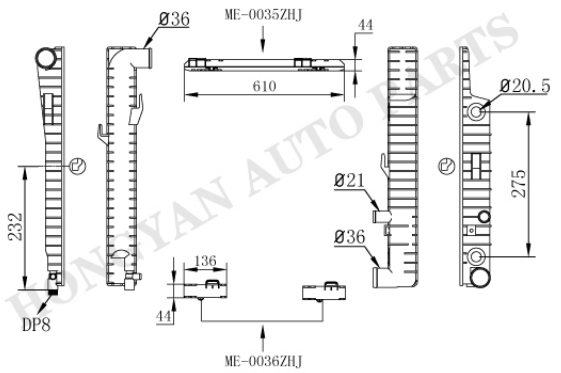

ME-0002AT/MT

Tank size :(R5×4×5×56.5×448.5)
OEM :
DPI :
NISSENS :
APPLICATION :
94-96 MERCEDES BENZ C220 2.2L
97-99 MERCEDES BENZ C280 2.8L

ME-0001-1

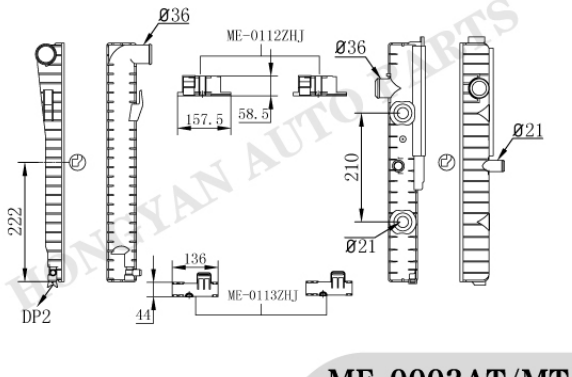

ME-0003AT/MT

Tank size :(R5×4×5×56.5×448.5)
OEM :2025005203
DPI :
NISSENS :62712 62712A
APPLICATION :
95-01 MERCEDES BENZ C200/230
97-00 MERCEDES BENZ CLK200/230

MERCEDES BENZ

ME-0004

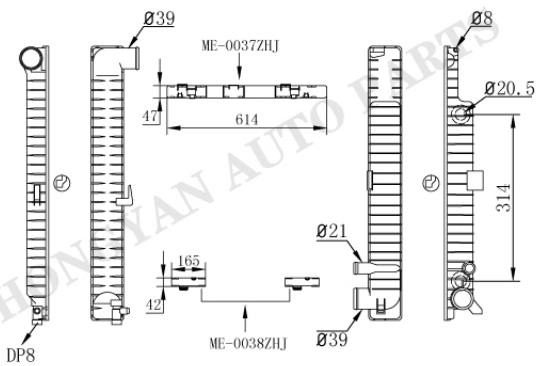

ME-0005AT/MT

Tank size :(R5×4×5.5×61×515.5)
OEM :2105000103
DPI :2069
NISSENS :
APPLICATION :
95-97 MERCEDES BENZ E300 3.0L

ME-0006

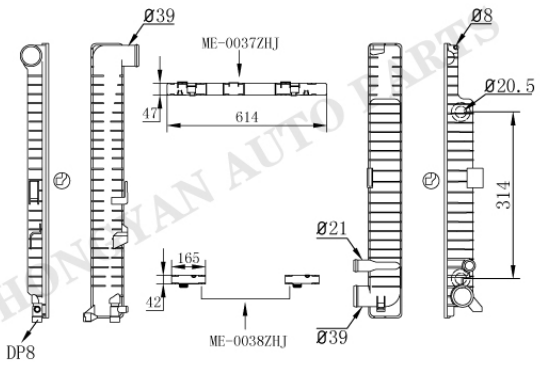

ME-0005AT/MT

Tank size :(R5×4×5.5×61×515.5)
OEM :2105003203 2105006603
DPI :
NISSENS :62612A
APPLICATION :
95-97 MERCEDES BENZ E300 3.0L

ME-0009

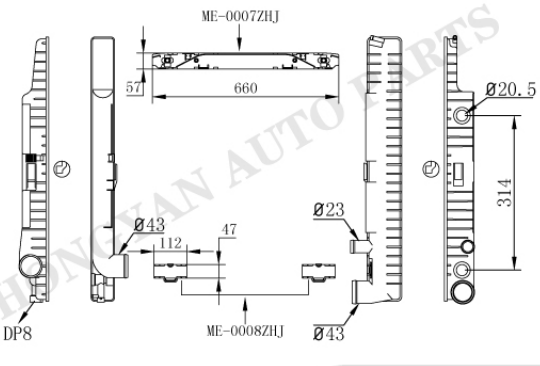

ME-0010AT/MT

Tank size :(R10×5×5×65×496)
OEM :1405001403
DPI :1313 1315
NISSENS :
APPLICATION :
98-99 MERCEDES BENZ CL500 5.0L
94-99 MERCEDES BENZ S420 4.2L
94-99 MERCEDES BENZ S500 5.0L

ME-0013

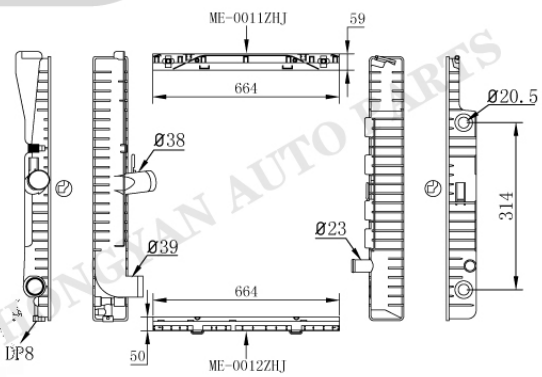

ME-0014AT/MT

Tank size :(R10×5×5×65×496)
OEM :1405002103
DPI :1847
NISSENS :
APPLICATION :
96-99 MERCEDES BENZ S320 3.2L

HONGYAN AUTO PARTS

MERCEDES BENZ

ME-0015

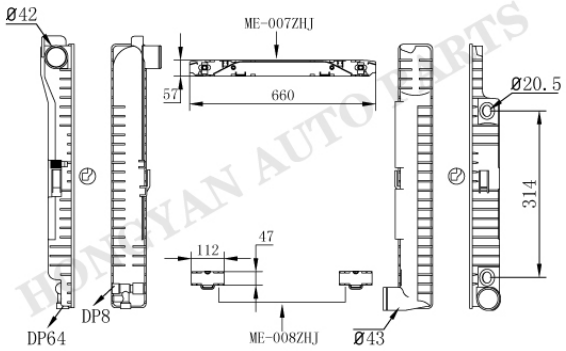

ME-0016AT/MT

Tank size :(R5×5×5×65×496)
OEM :1405001303/2303
DPI :1311
NISSENS :
APPLICATION :
94-95 MERCEDES BENZ S350 3.5L

ME-0017

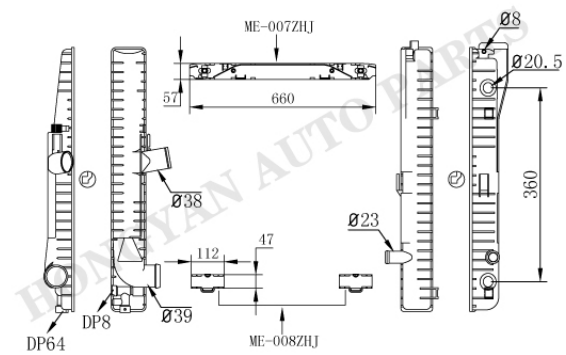

ME-0018AT/MT

Tank size :(R5×5×5×65×496)
OEM :1405000403
DPI :1312
NISSENS :
APPLICATION :
94-95 MERCEDES BENZ S320 3.2L

ME-0019

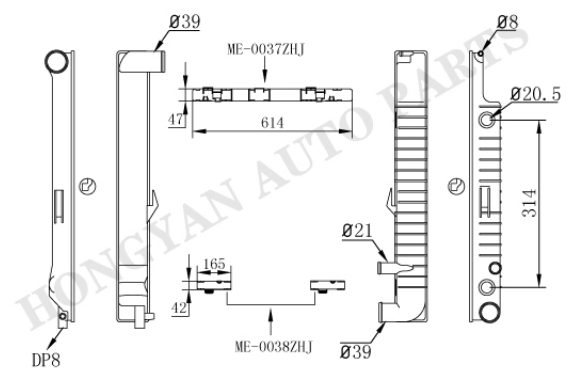

ME-0020AT/MT

Tank size :(R4.5×4×5×61×509)
OEM :2105002803/2923/3030/7102
DPI :
NISSENS :2290
APPLICATION :
98-02 MERCEDES BENZ E320 3.2L

ME-0021

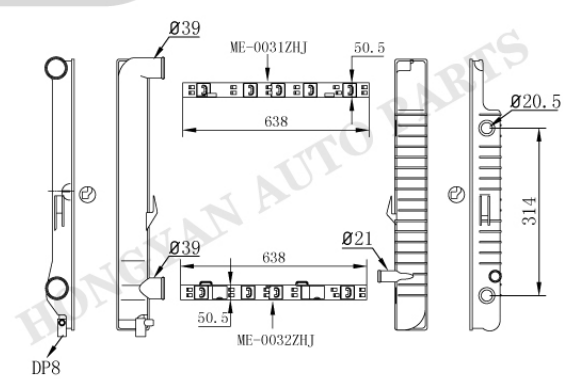

ME-0022AT/MT

Tank size :(R4.5×4×5×61×509)
OEM :2105000903
DPI :2189
NISSENS :
APPLICATION :
96-97 MERCEDES BENZ E320 3.2L

MERCEDES BENZ

ME-0023

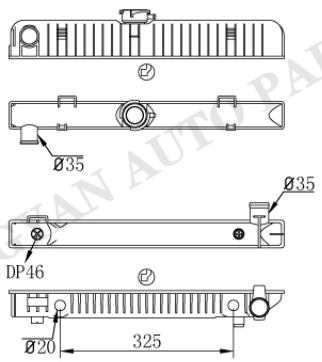

Tank size :(R5×5×5.5×52.2×516.5)
OEM :1235011001/201/401
1235012901 1235013803
DPI :670
NISSENS :62710 62740
APPLICATION :
76-78 MERCEDES BENZ 230 2.3L(GAS)
76-83 MERCEDES BENZ 240 2.4L(DISESL)

ME-0024AT/MT

ME-0025

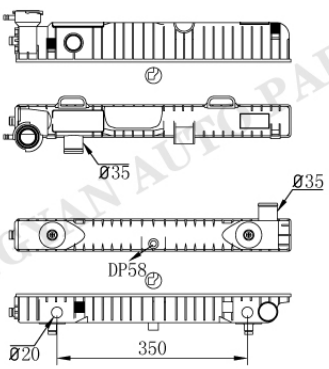

Tank size :(R5×4×5.5×61×515.5)
OEM :6015005503 6015008203
DPI :
NISSENS :62632
APPLICATION :
77- MERCEDES BENZ T1 207/209/309/407

ME-0026AT/MT

ME-0027

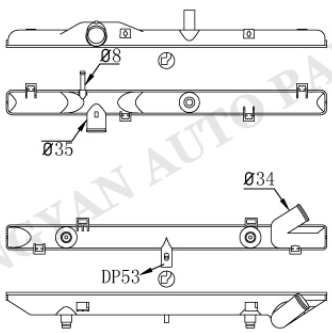

Tank size :(R8×5×4×46.5×602)
OEM :
DPI :
NISSENS :
APPLICATION :
MERCEDES BENZ MB100/140

ME-0028

ME-0029

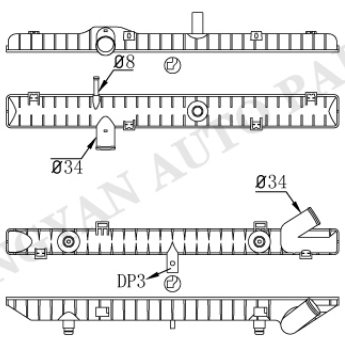

Tank size :(R8.5×5×4.5×61.5×624)
OEM :
DPI :
NISSENS :
APPLICATION :
MERCEDES BENZ MB100/140

ME-0030

HONGYAN AUTO PARTS

MERCEDES BENZ

ME-0033

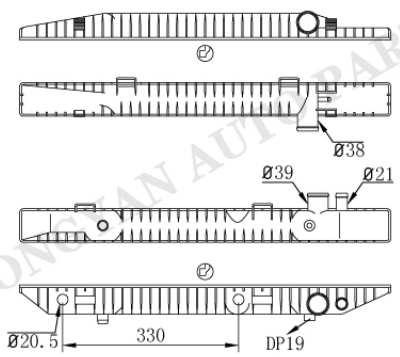

ME-0034AT/MT

Tank size :(R7×5×5×63×697)
OEM :1265001703
DPI :438
NISSENS :62727A
APPLICATION :
82-85 MERCEDES BENZ 380S 3.8L
86-91 MERCEDES BENZ 420S 4.2L
86-91 MERCEDES BENZ 560S 5.6L

ME-0039

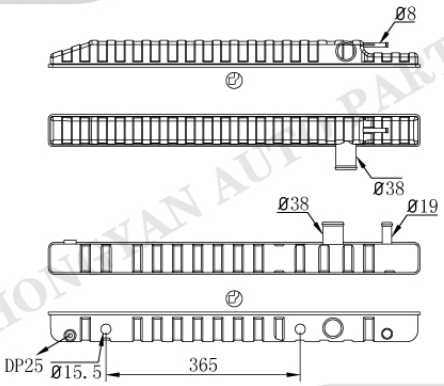

ME-0040AT/MT

Tank size :(R12×5×5×60×698)
OEM :1075002103
DPI :436
NISSENS :
APPLICATION :
82-85 MERCEDES BENZ 380S 3.8L

ME-0041

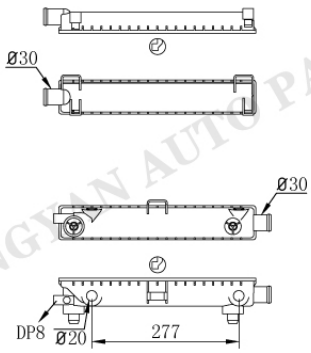

ME-0042AT/MT

Tank size :(R5×4.5×5.4×64×371)
OEM :2015000503/4003
DPI :
NISSENS :62551
APPLICATION :
92-95 MERCEDES BENZ E200/220

ME-0043

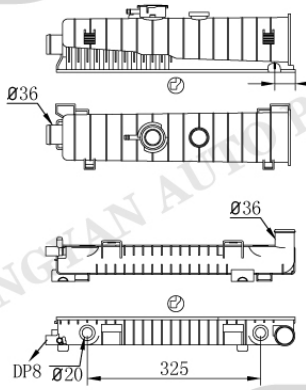

ME-0044AT/MT

Tank size :(R5×4×5×56×448.5)
OEM :2025006103
DPI :2286
NISSENS :
APPLICATION :
99-00 MERCEDES BENZ C230 2.3L

MERCEDES BENZ

ME-0045

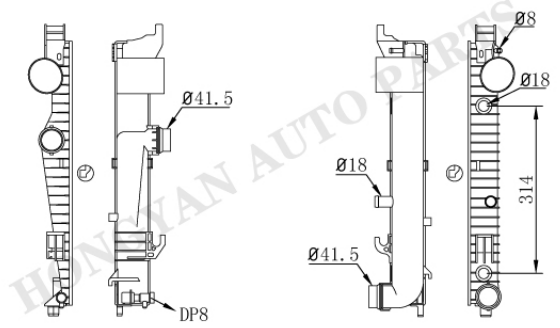

ME-0046AT/MT

Tank size :(R5×4×5×65×496)
OEM : 2205000103
DPI :
NISSENS :62772
APPLICATION :
98-00 MERCEDES BENZ S430 4.3L
98-00 MERCEDES BENZ S500 5.0L

ME-0045

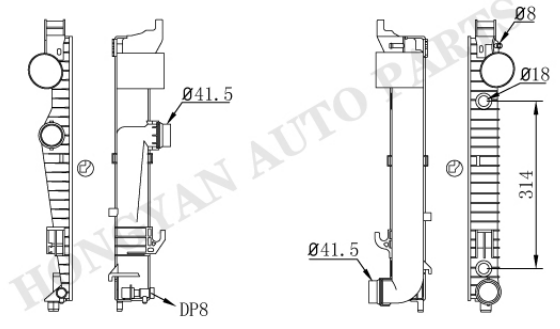

ME-0047AT/MT

Tank size :(R5×4×5×65×496)
OEM :2205000103
DPI :
NISSENS :
APPLICATION :
98-00 MERCEDES BENZ S430 4.3L
98-00 MERCEDES BENZ S500 5.0L

ME-0048

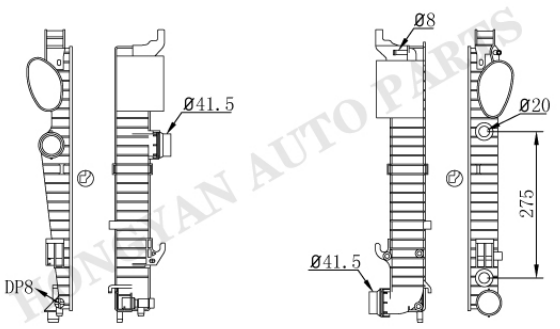

ME-0049AT/MT

Tank size :(R5×5×5×65×496)
OEM :2205000103/903/303
DPI :
NISSENS :
APPLICATION :
00-06 MERCEDES BENZ CL500 5.0L
00-06 MERCEDES BENZ S430 4.3L
00-06 MERCEDES BENZ S500 5.0L
00-08 MERCEDES BENZ SL55 5.5L
04-09 MERCEDES BENZ SL600 6.0L

ME-0048

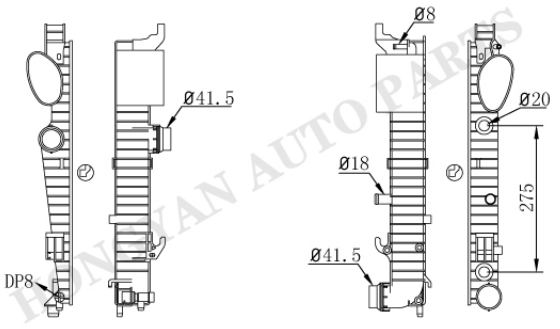

ME-0050AT/MT

Tank size :(R5×5×5×65×496)
OEM :2205000103/903/303
DPI :2652
NISSENS :62774A 62547A
APPLICATION :
00-06 MERCEDES BENZ CL500 5.0L
00-06 MERCEDES BENZ S430 4.3L
00-06 MERCEDES BENZ S500 5.0L
00-08 MERCEDES BENZ SL55 5.5L
04-09 MERCEDES BENZ SL600 6.0L

HONGYAN AUTO PARTS

MERCEDES BENZ

ME-0051

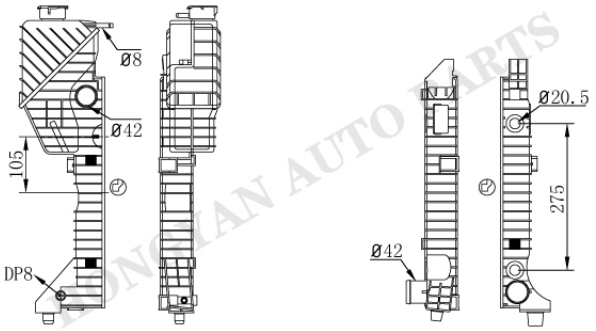

ME-0052AT/MT

Tank size :(R6×4.5×5×61×433.5)
OEM :9015002400/800/3300/3400
DPI :
NISSENS :62685A
APPLICATION :
95- MERCEDES SPRINTER 208D/210D/212D
95- MERCEDES SPRINTER 308D/310D/312D
95- MERCEDES SPRINTER 408D/410D/412D

ME-0053

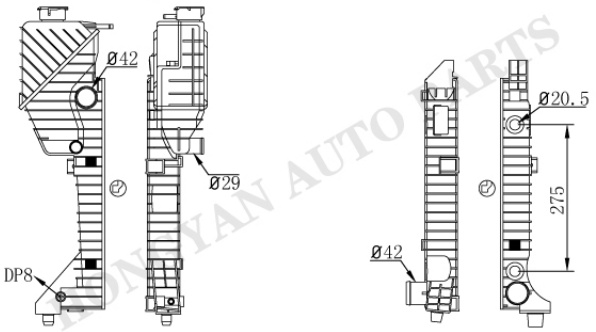

ME-0052AT/MT

Tank size :(R6×4.5×5×61×433.5)
OEM :9015003800/500/900
DPI :2796
NISSENS :62519A
APPLICATION :
95- MERCEDES SPRINTER 208D/210D/212D
95- MERCEDES SPRINTER 308D/310D/312D
95- MERCEDES SPRINTER 408D/410D/412D

ME-0054

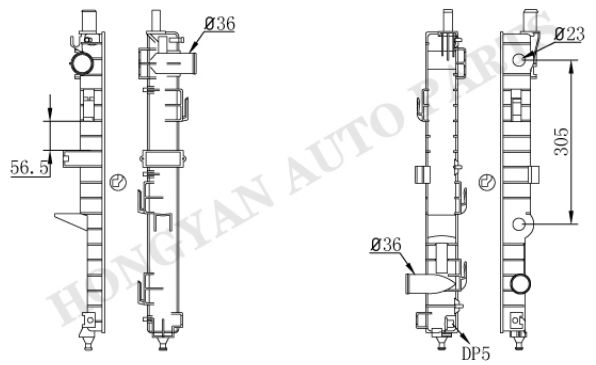

ME-0055AT/MT

Tank size :(R4×6.5×5×59.5×565)
OEM :163500003/404/2204
DPI :2190
NISSENS :
APPLICATION :
98-02 MERCEDES BENZ ML320 3.2L
99-01 MERCEDES BENZ ML430 4.3L
02-05 MERCEDES BENZ ML500 5.0L

ME-0056AT/MT

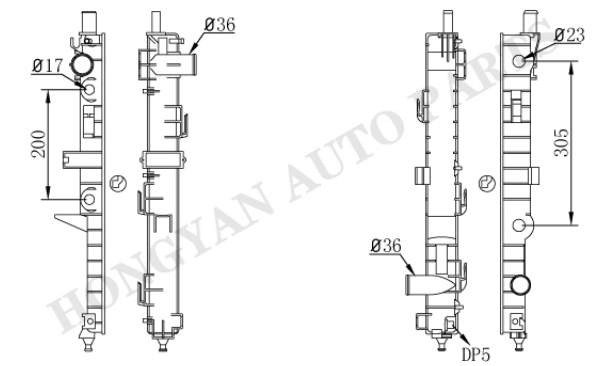

ME-0055AT/MT

Tank size :(R4×6.5×5×59.5×565)
OEM :163500303
DPI :2345
NISSENS :62788A
APPLICATION :
03-05 MERCEDES BENZ ML350 3.5L
00-03 MERCEDES BENZ ML550 5.5L

HONGYAN AUTO PARTS

MERCEDES BENZ

ME-0059

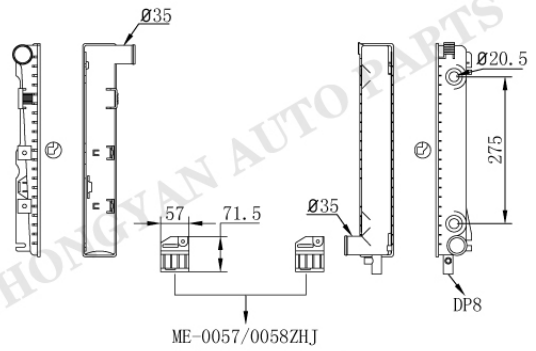

ME-0060AT/MT

Tank size :(R5.5×5×5×63×400)
OEM :2015004103/203
DPI :
NISSENS :62670A
APPLICATION :
82-90 MERCEDES BENZ 190
83-93 MERCEDES BENZ 190D
82-93 MERCEDES BENZ 190E

ME-0059

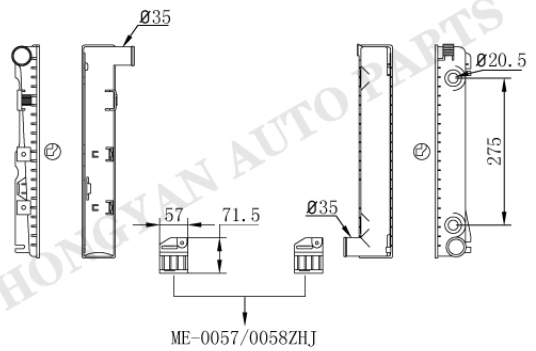

ME-0061AT/MT

Tank size :(R5.5×5×5×63×400)
OEM :2015004103/203
DPI :
NISSENS :62670A
APPLICATION :
82-90 MERCEDES BENZ 190
83-93 MERCEDES BENZ 190D

ME-0059

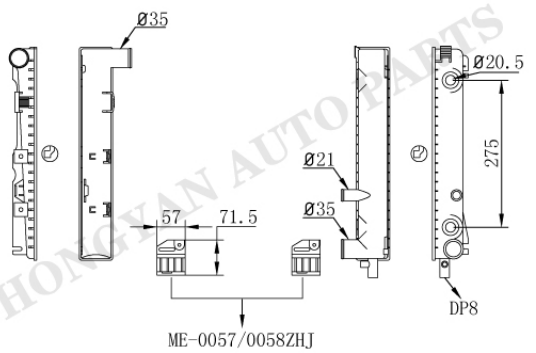

ME-0062AT/MT

Tank size :(R5.5×5×5×63×400)
OEM :
DPI :
NISSENS :
APPLICATION :
82-90 MERCEDES BENZ 190
83-93 MERCEDES BENZ 190D

ME-0063

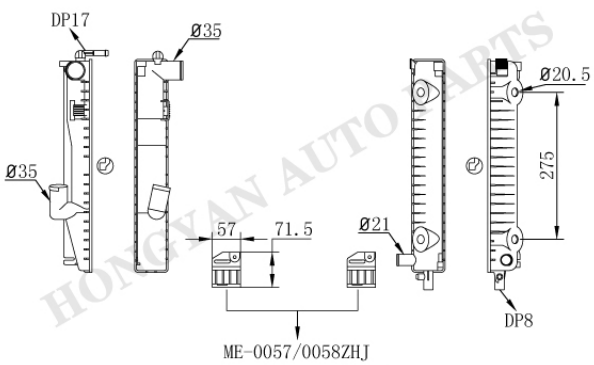

ME-0064AT/MT

Tank size :(R5.5×5×5×63×400)
OEM :1245001403/503
DPI :
NISSENS :62711
APPLICATION :
84- MERCEDES BENZ 260/280/300

HONGYAN AUTO PARTS

MERCEDES BENZ

ME-0067

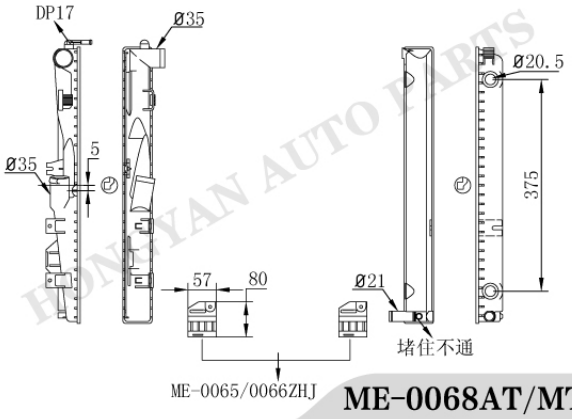

ME-0068AT/MT

Tank size :(R6.5×4×5.5×55×519)
OEM :1265004103 1265005103
DPI :472 453
NISSENS :62682A
APPLICATION :
88-91 MERCEDES BENZ 300SE 3.0L
88-91 MERCEDES BENZ 300SEL 3.0L

ME-0067

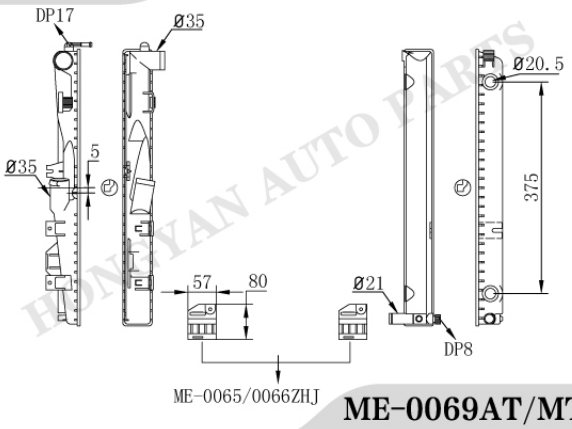

ME-0069AT/MT

Tank size :(R6.5×4×5.5×55×519)
OEM :
DPI :
NISSENS :
APPLICATION :
88-91 MERCEDES BENZ 300SE 3.0L
88-91 MERCEDES BENZ 300SEL 3.0L

ME-0070

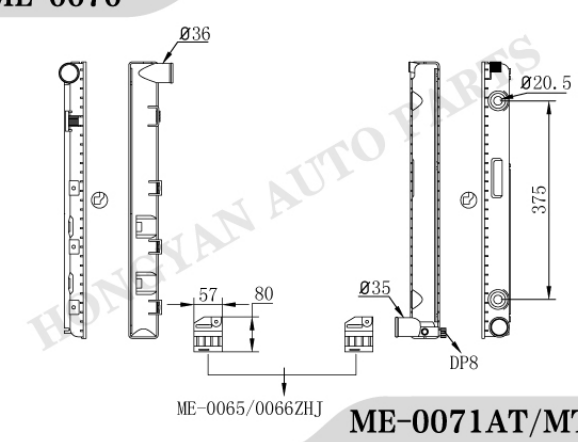

ME-0071AT/MT

Tank size :(R6.5×4×5.5×55×519)
OEM :1245004403 1245009803
DPI :1310
NISSENS :62698A
APPLICATION :
90-93 MERCEDES BENZ 300D 2.5L

ME-0072

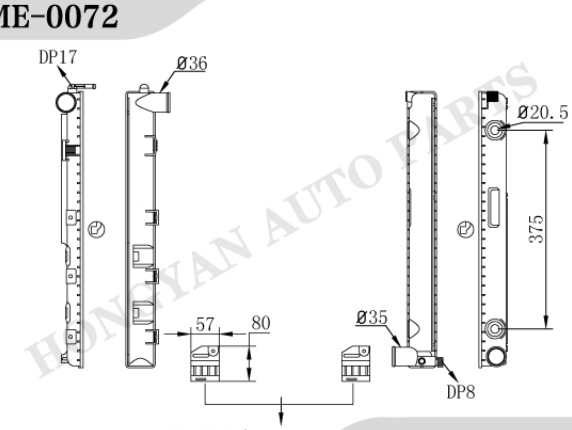

ME-0071AT/MT

Tank size :(R6.5×4×5.5×55×519)
OEM :1245007803/2002
DPI :1432
NISSENS :
APPLICATION :
92-93 MERCEDES BENZ E400/E450/E500

HONGYAN AUTO PARTS

MERCEDES BENZ

ME-0072

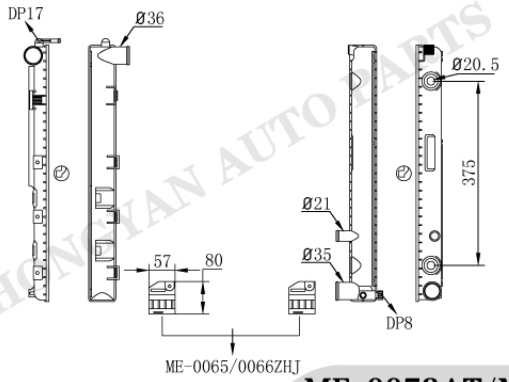

ME-0073AT/MT

Tank size :(R6.5×4×5.5×55×519)
OEM :
DPI :
NISSENS :
APPLICATION :
95- MERCEDES BENZ 300CD/300TD

ME-0070

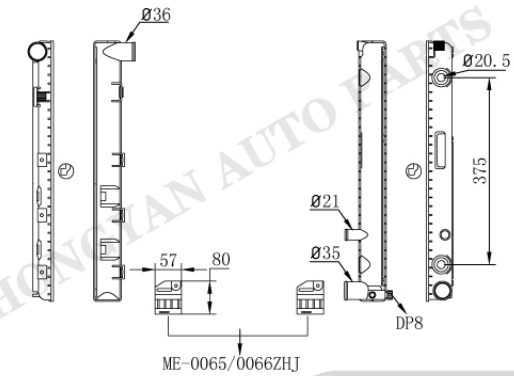

ME-0073AT/MT

Tank size :(R6.5×4×5.5×55×519)
OEM :
DPI :
NISSENS :
APPLICATION :
88-91 MERCEDES BENZ 230

ME-0074

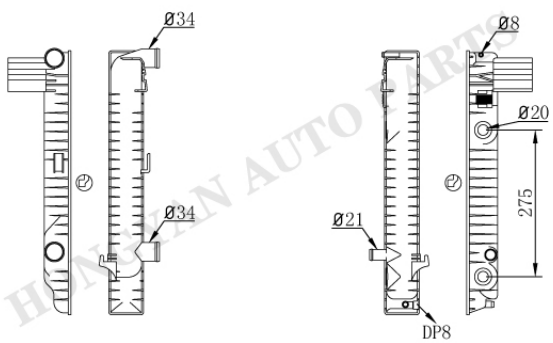

ME-0075AT/MT

Tank size :(R5.5×5×5×65×496)
OEM :1295001203/303
DPI :2070
NISSENS :
APPLICATION :
89- MERCEDES BENZ SL430/500

ME-0076

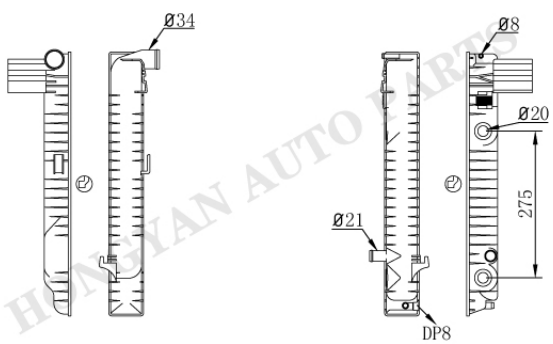

ME-0075AT/MT

Tank size :(R5.5×5×5×65×496)
OEM :1295001203/303
DPI :1314
NISSENS :
APPLICATION :
89- MERCEDES BENZ SL430/500

HONGYAN AUTO PARTS

MERCEDES BENZ

ME-0077

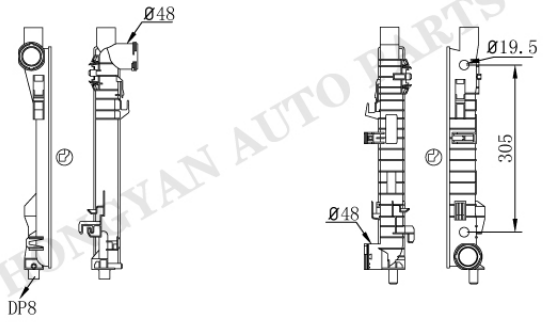

ME-0078AT/MT

Tank size :(R5×4×5.5×49×415)
OEM :2035000503/603/703
2035001003 2035001103
DPI :2337 2756
NISSENS :62786A
APPLICATION :
01-07 MERCEDES BENZ C230/C240/C280/C320

ME-0079

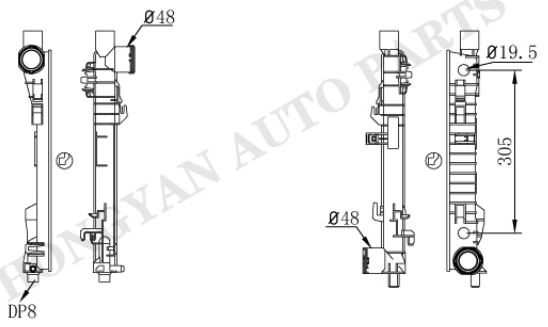

ME-0080AT/MT

Tank size :(R11.5×4×5×42.5×415)
OEM :2035000503/603/703
2035001003 2035001103
DPI :2337 2756
NISSENS :
APPLICATION :
01-07 MERCEDES BENZ C230/C240/C280/C320

ME-0081

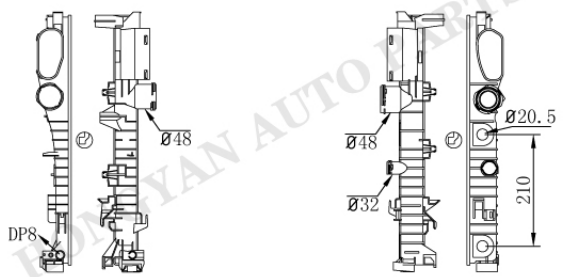

ME-0082AT/MT

Tank size :(R5×4×5.5×47.5×469)
OEM :2115000102 2115003702
DPI :2868
NISSENS :62792A
APPLICATION :
03-05 MERCEDES BENZ E320 3.2L
06-09 MERCEDES BENZ E350 3.5L

ME-0083AT/MT

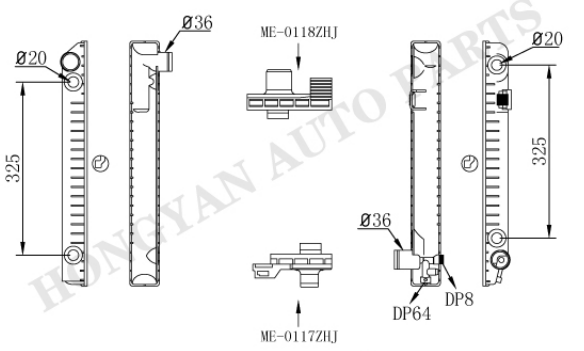

ME-0084AT/MT

Tank size :(R5.5×4×5.5×55.5×460)
OEM :8MK376712321
2015006803/903
DPI :
NISSENS :62602 62734A
APPLICATION :
88-93 MERCEDES BENZ 190

RONGYAN AUTO PARTS

MERCEDES BENZ

ME-0085

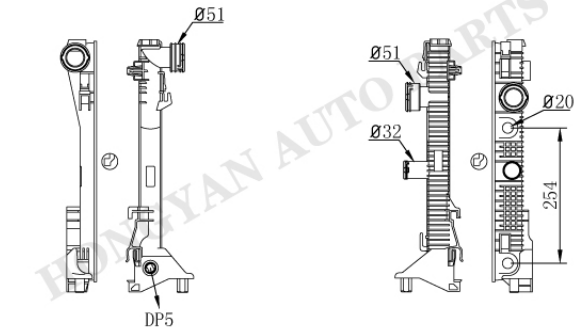

ME-0086AT/MT

Tank size :(R4.5×4×5×42.5×452)
OEM :2045000403/1503/2803/
0203/2203/0303
DPI :
NISSENS :67168 67164 17161
APPLICATION :
07- MERCEDES BENZ C250/C300
07- MERCEDES BENZ E200/E250/E300/E350
07- MERCEDES BENZ E200/E250/E300/E350
07- MERCEDES BENZ GLK280/GLK350

ME-0087

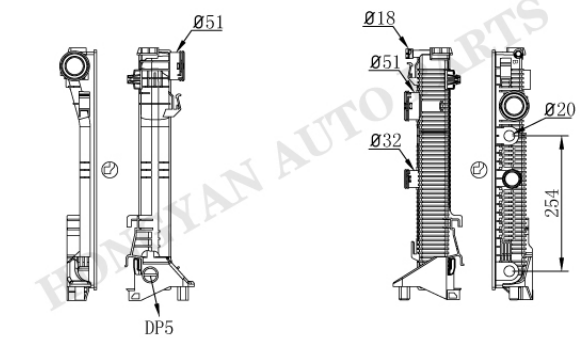

ME-0088AT/MT

Tank size :(R4.5×4×5×60×450)
OEM :2045000603/1203/3103/3603
DPI :13162
NISSENS :67612 67613 67101
APPLICATION :
07- MERCEDES BENZ C180/C350
07- MERCEDES BENZ E250/E300/E350/E500

ME-0089AT/MT

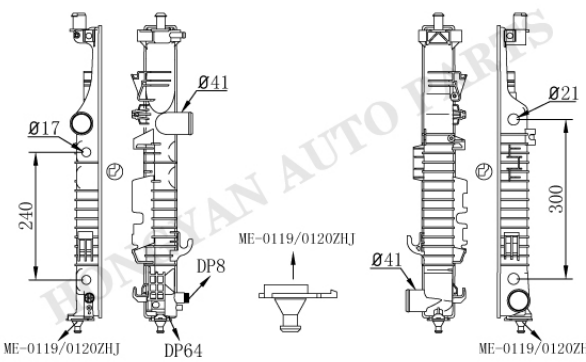

ME-0090AT/MT

Tank size :(R5.5×4×5.5×60.5×548.5)
OEM :2515000003/103/303
DPI :2909
NISSENS :62576A
APPLICATION :
06-11 MERCEDES BENZ ML350/ML500/ML550
06-07 MERCEDES BENZ R350/R500

ME-0089-1AT

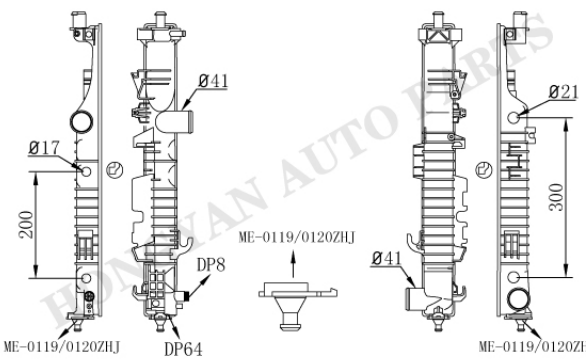

ME-0090AT/MT

Tank size :(R5.5×4×5.5×60.5×548.5)
OEM :2515000003/103/303
DPI :
NISSENS :
APPLICATION :
06-11 MERCEDES BENZ ML350/ML500/ML550
06-07 MERCEDES BENZ R350/R500

HONGYAN AUTO PARTS

MERCEDES BENZ

ME-0091

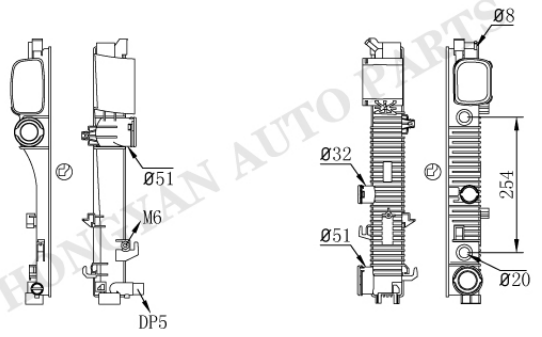

ME-0092AT/MT

Tank size :(R4.5×4×5×60.5×470.5)
OEM :2215002603/0003/0203
/0503/0103
DPI :2875 13027
NISSENS :67107A
APPLICATION :
08-12 MERCEDES BENZ CL550/CL600
08-12 MERCEDES BENZ S400/S450/S550/S600

ME-0091

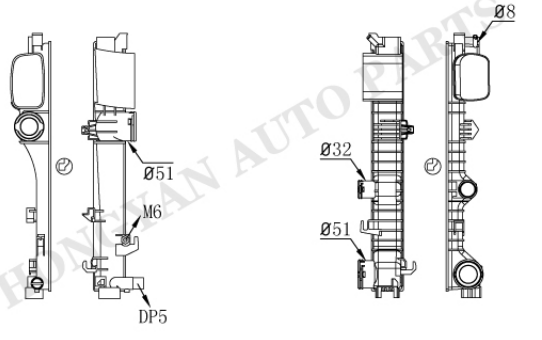

ME-0093

Tank size :(R4.5×4×5×60.5×470.5)
OEM :
DPI :
NISSENS :627025
APPLICATION :
08-12 MERCEDES BENZ CL550/CL600
08-12 MERCEDES BENZ S400/S450/S550/S600

ME-0094

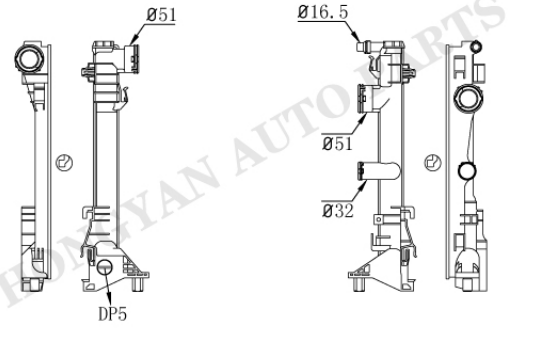

ME-0095

Tank size :(R5.5×4×5.5×48×444)
OEM :
DPI :13376
NISSENS :
APPLICATION :
11- MERCEDES BENZ W204

ME-0094

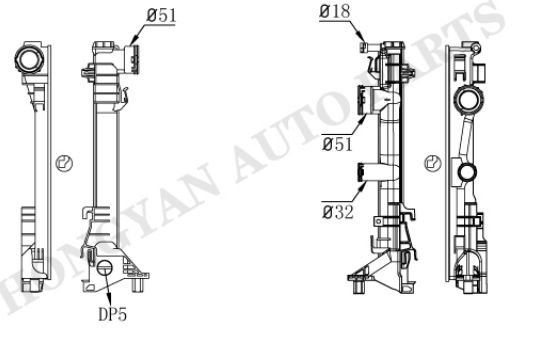

ME-0096

Tank size :(R5.5×4×5.5×48×444)
OEM :
DPI :
NISSENS :
APPLICATION :
11- MERCEDES BENZ W204

HONGYAN AUTO PARTS

MERCEDES BENZ

ME-0097AT/MT

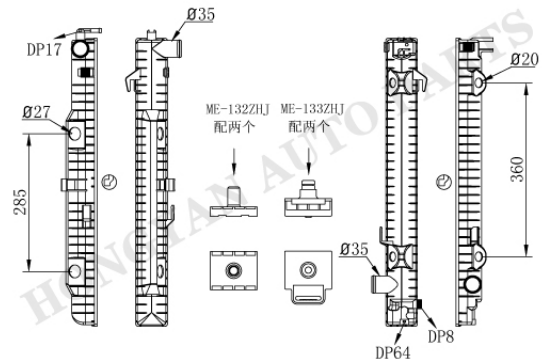

ME-0098AT/MT

Tank size :(R5×4×5.5×65.5×596.5)
OEM :461500002 4635000100/400
4635001000/100/200
DPI :
NISSENS :62599A
APPLICATION :
02-08 MERCEDES BENZ G500/G550/G55

ME-0099

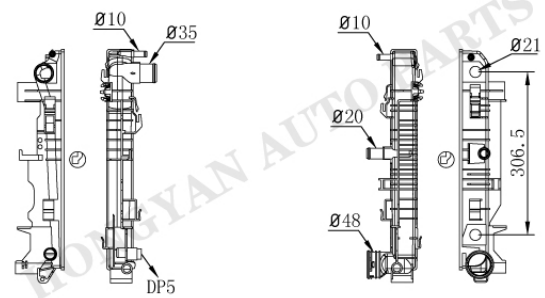

ME-0100AT/MT

Tank size :(R5×4×5.5×49×415)
OEM :68013630AA
DPI :13254
NISSENS :67156A 67157A
APPLICATION :
07-09 DODGE SPRINTER 2500/3500
07-13 FREIGHTLINER SPRINTER 2500/3500
10-13 MERCEDES BENZ SPRINTER 3500

ME-0101

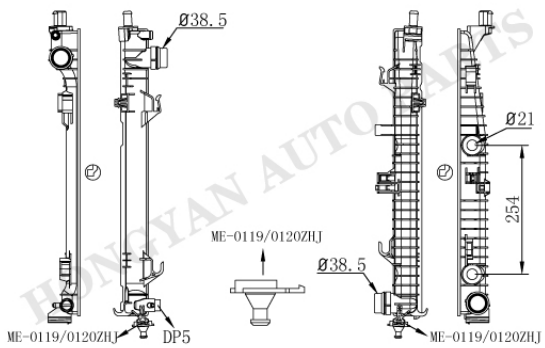

ME-0102AT/MT

Tank size :(R4.5×4×5×49.8×565)
OEM :0995001303
DPI :
NISSENS :67188
APPLICATION :
11- MERCEDES BENZ A

ME-0103

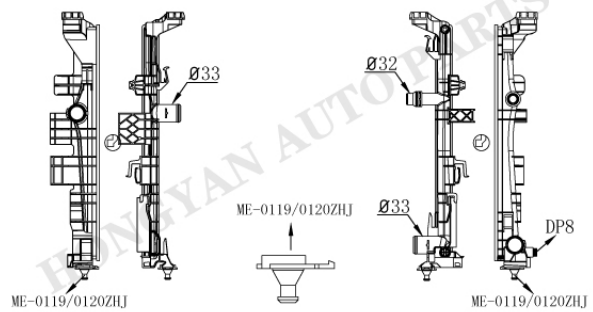

ME-0104

Tank size :(R5.5×3.9×5.5×31.8×444.2)
OEM :2465000303
DPI :
NISSENS :67185
APPLICATION :
11- MERCEDES BENZ B-CLASS W246 B180/B220

MERCEDES BENZ

ME-0105

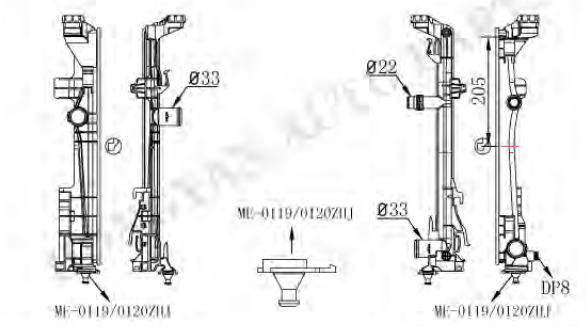

ME-0106

Tank size :(R5.5×3.9×5.5×31.8×444.2)
OEM :2465001203
DPI :
NISSENS :67186
APPLICATION :
12- MERCEDES BENZ W176 A160/A180/A200
11- MERCEDES BENZ W246 B160/B180/B200

ME-0107

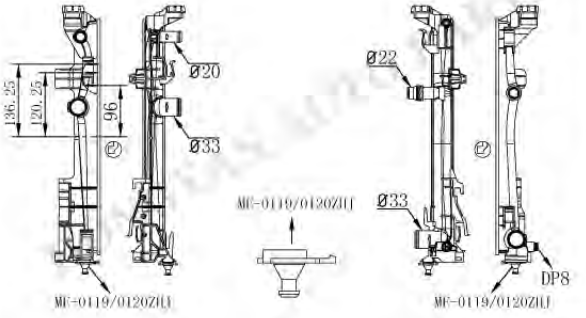

ME-0108

Tank size :(R5.5×3.9×5.5×41.5×444.2)
OEM :2465001303
DPI :
NISSENS :67187
APPLICATION :
12- MERCEDES BENZ W176 A160/A180/A200
11- MERCEDES BENZ W246 B160/B180/B200

ME-0109

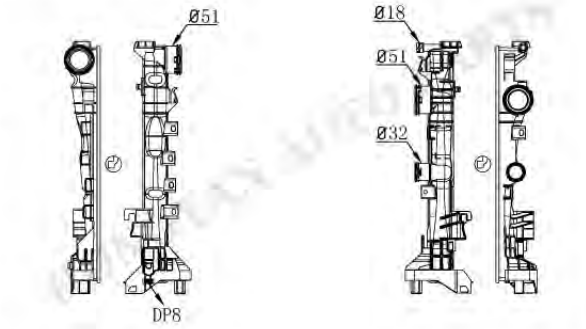

ME-0110

Tank size :(R5.5×4×5.5×47.8×445)
OEM :1975000003
DPI :13358
NISSENS :67190
APPLICATION :
12-15 MERCEDES BENZ C63 AMG 6.3L
12-14 MERCEDES BENZ CLS63 AMG 5.5L
10-14 MERCEDES BENZ E63 AMG 5.5L
12-15 MERCEDES BENZ SLK55 AMG 5.5L

ME-0111

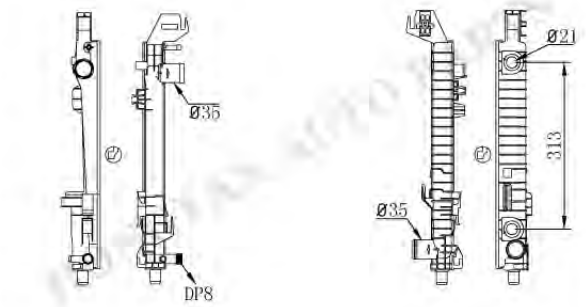

ME-0112AT/MT

Tank size :(R5.5×4×5.5×41.5×428)
OEM :165000003/403/504
DPI :
NISSENS :62799A
APPLICATION :
04-12 MERCEDES BENZ A150/A160/A180/A200
05-12 MERCEDES BENZ B150/B160/B180/B200

MERCEDES BENZ

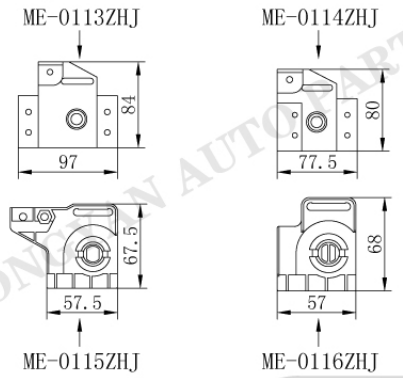

Tank size :
OEM :
DPI :
NISSENS :
APPLICATION :

ME-0123

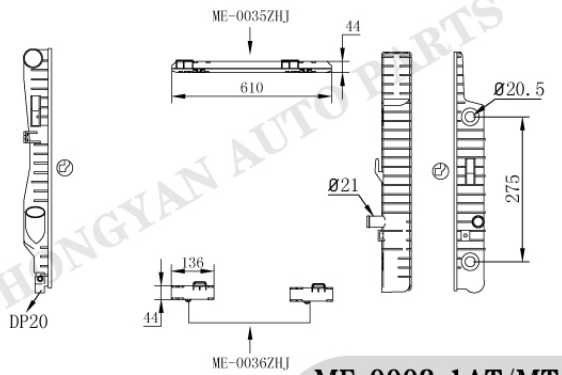

ME-0002-1AT/MT

Tank size :(R5×4×5×56.5×448.5)
OEM :2025004103 2025004203
DPI :1845
NISSENS :62739A
APPLICATION :
94-96 MERCEDES BENZ C280 2.8L
95-97 MERCEDES BENZ C36 3.6L

ME-0124

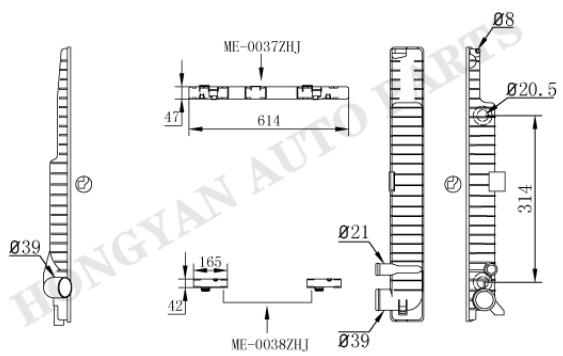

ME-0005AT/MT

Tank size :(R5×4×5.5×61×515.5)
OEM :2105004703
DPI :
NISSENS :62615
APPLICATION :
97-03 MERCEDES BENZ E55 AMG

ME-0125

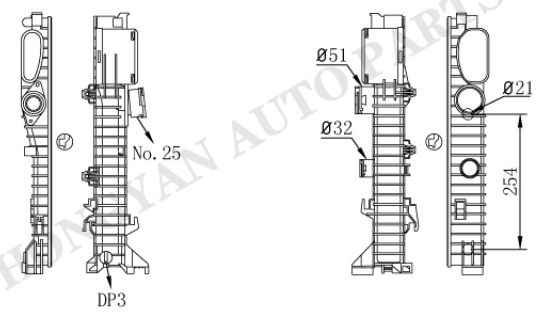

ME-0126AT/MT

Tank size :(R4.5×4×6×60×470)
OEM :2115000202/2302/3102
DPI :2906
NISSENS :62797A
APPLICATION :
04-10 MERCEDES BENZ CLS500
02-09 MERCEDES BENZ E200/E220/E270/500

MERCEDES BENZ

ME-0127

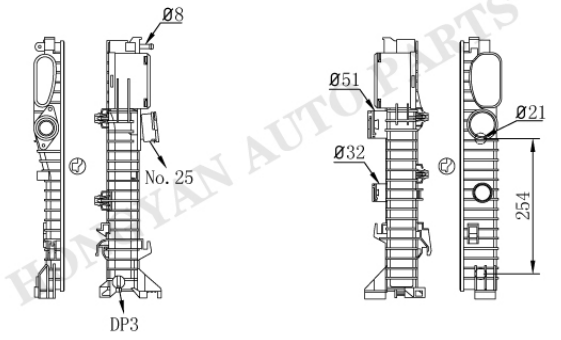

ME-0126AT/MT

Tank size :(R4.5×4×6×60×470)
OEM :
DPI :
NISSENS :
APPLICATION :
04-10 MERCEDES BENZ CLS500
02-09 MERCEDES BENZ E200/E220/E270/500

ME-0128

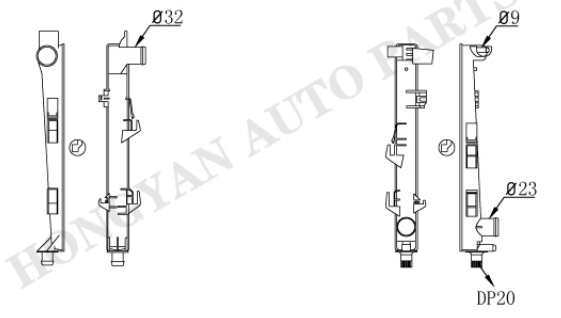

ME-0129

Tank size :(R5×4×5×41.2×388.5)
OEM :1685001802
DPI :
NISSENS :62546
APPLICATION :
97-04 MERCEDES BENZ A140/A160

ME-0130AT/MT

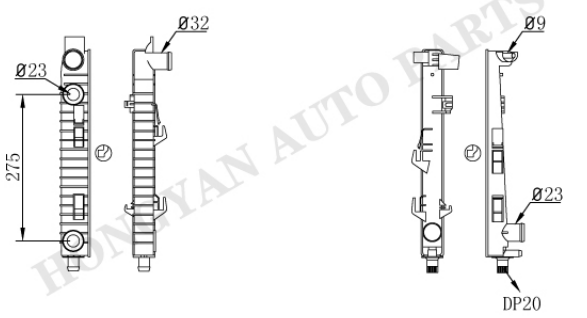

ME-0129

Tank size :(R5×4×5×41.2×388.5)
OEM :1685001102/202/302/502/602
DPI :
NISSENS :62781A
APPLICATION :
02-05 MERCEDES BENZ VANEO

ME-0130AT/MT

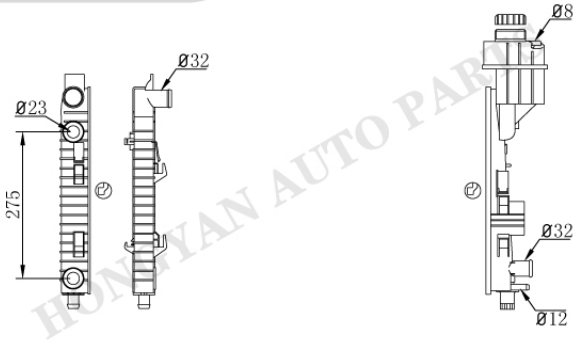

ME-0131

Tank size :(R5×4×5×41.2×388.5)
OEM :1685000202/302/602/2002
DPI :
NISSENS :62661 62663
APPLICATION :
97-04 MERCEDES BENZ A140/A160/A190

HONGYAN AUTO PARTS

MERCEDES BENZ

ME-0132

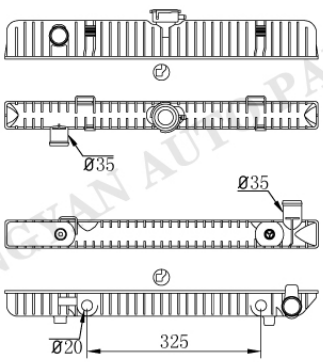

ME-0133AT/MT

Tank size :(R5.5×4.3×5.1×52×588)
OEM :1235010701/710/801
1235013301 1235013801
DPI :671
NISSENS :
APPLICATION :
77-81 MERCEDES BENZ 280CE/280E/280SE

ME-0134

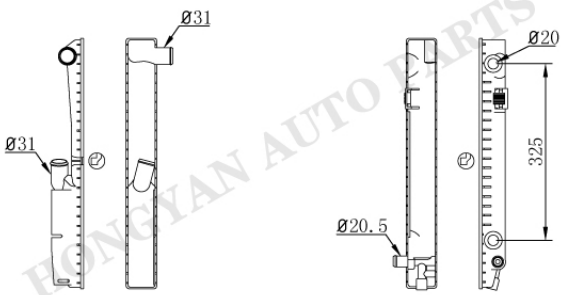

ME-0135AT/MT

Tank size :(R5.5×3.8×5.5×56×460.5)
OEM :2015006403 2015006603
DPI :470
NISSENS :62582A
APPLICATION :
87-93 MERCEDES BENZ 190E 2.6L

ME-0136

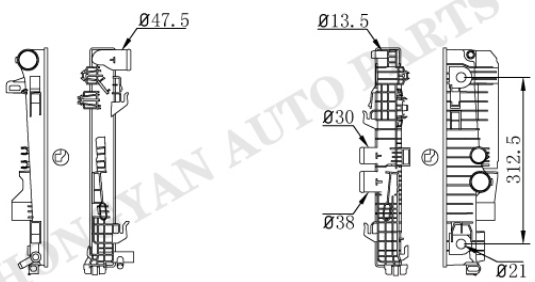

ME-0137AT/MT

Tank size :(R5.5×4×5.5×47.5×411.5)
OEM :6395010701 6395011201
DPI :
NISSENS :67174
APPLICATION :
03-15 MERCEDES BENZ VITO 109/110/111/115

ME-0138



ME-0139

Tank size :(R6×4.5×5×61×580)
OEM :6685000102
DPI :
NISSENS :62626A
APPLICATION :
96-11 MERCEDES BENZ VARIO 613/615/618

HONGYAN AUTO PARTS

MERCEDES BENZ

ME-0140



ME-0141

Tank size :(R6×4.5×5×61×580)
OEM :9705000403
DPI :
NISSENS :62794A
APPLICATION :
97- MERCEDES BENZ ATEGO

ME-0142

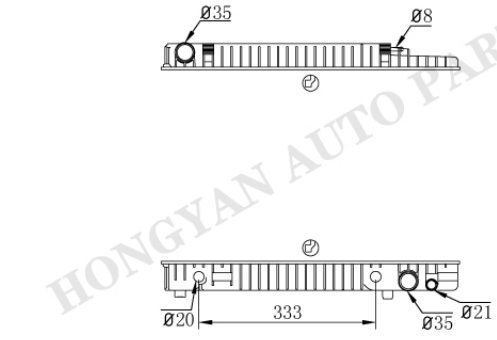

ME-0143AT/MT

Tank size :(R6×5.5×5×63.5×562)
OEM :1265002303
DPI :473
NISSENS :62724
APPLICATION :
81-85 MERCEDES BENZ 300 3.0L

ME-0144

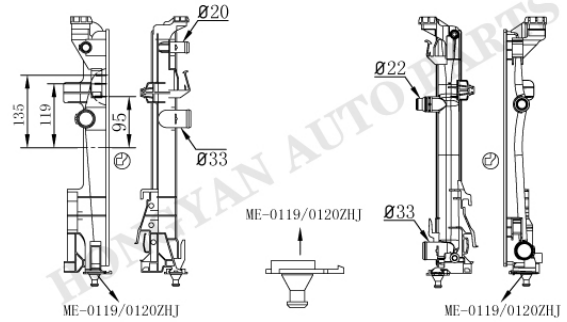

ME-0145

Tank size :(R5.5×4×5.5×47.5×444.5)
OEM :
DPI :13432
NISSENS :627063
APPLICATION :
12- MERCEDES BENZ A-CLASS W176 A160/180

ME-0146

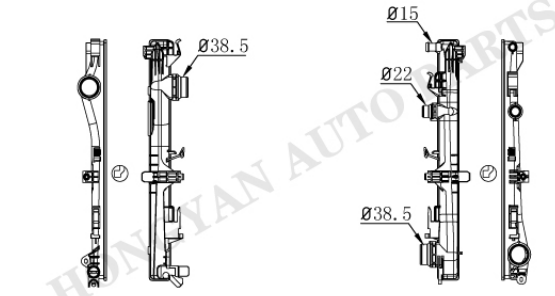

ME-0147

Tank size :(R5.5×4×5×42×452.5)
OEM :
DPI :
NISSENS :
APPLICATION :
15- MERCEDES BENZ C300 2.0L
15- MERCEDES BENZ C400 3.0L

HONGYAN AUTO PARTS

MERCEDES BENZ

ME-0148

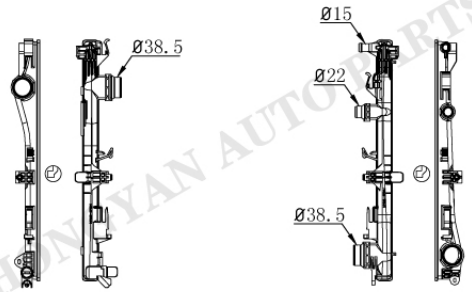

ME-0149

Tank size :(R5.5×4×5.5×32×452.5)
OEM :
DPI :
NISSENS :
APPLICATION :
MERCEDES BENZ

ME-0150

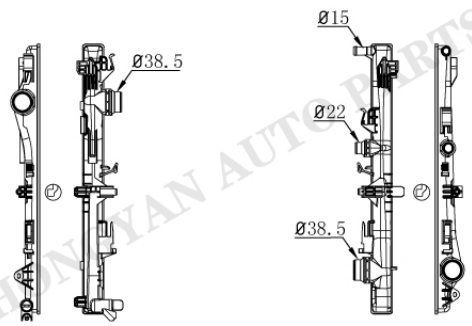

ME-0151

Tank size :(R5.5×4×5.5×42×508)
OEM :
DPI :
NISSENS :
APPLICATION :
14- MERCEDES BENZ W222

ME-0152



ME-0153AT/MT

Tank size :(R××41×427)
OEM :2035000303/06030/1103
DPI :
NISSENS :
APPLICATION :

ME-0154

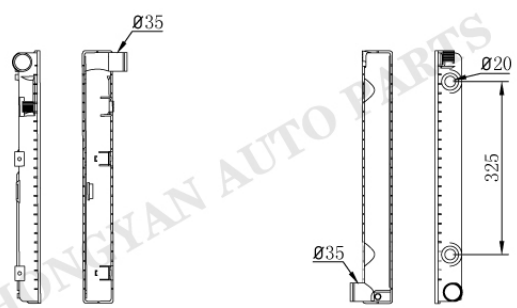

ME-0155AT/MT

Tank size :(R5×4×5×56×474.5)
OEM :2015001703/1803
DPI :443 452
NISSENS :
APPLICATION :
82-93 C-CLASS W201 190E/D

HONGYAN AUTO PARTS

MERCEDES BENZ

ME-0156

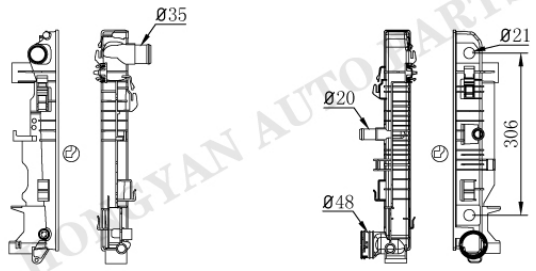

ME-0157AT/MT

Tank size :(R5×4×5.5×49×415)
OEM :
DPI :
NISSENS :67156A 67157A
APPLICATION :
07-09 DODGE SPRINTER 2500/3500
07-13 FREIGHTLINER SPRINTER 2500/3500
10-13 MERCEDES BENZ SPRINTER 3500

ME-0156

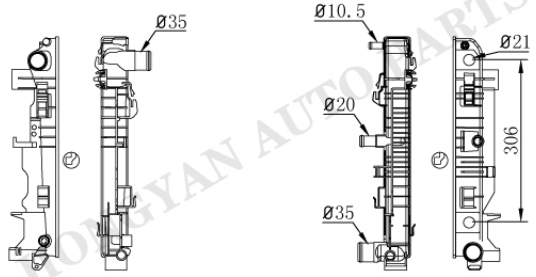

ME-0158AT/MT

Tank size :(R5×4×5.5×49×415)
OEM :
DPI :
NISSENS :
APPLICATION :

ME-0159

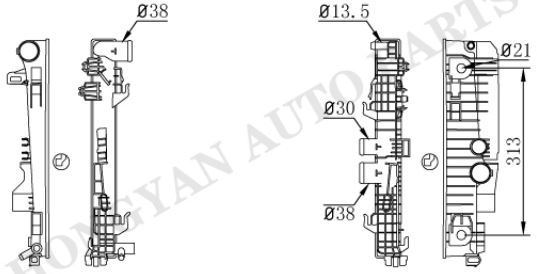

ME-0160AT/MT

Tank size :(R5.5×4×5.5×47.5×411.5)
OEM :6395010701/1201
DPI :
NISSENS :67174
APPLICATION :
03-06 MERCEDES VIANO
03-06 MERCEDES VITO

ME-0161



ME-0162

Tank size :(R6×4.5×5×61×580)
OEM :
DPI :
NISSENS :
APPLICATION :
97- MERCEDES BENZ ATEGO

RONGYAN AUTO PARTS

MERCEDES BENZ

	Tank size : OEM : DPI : NISSENS : APPLICATION :
	Tank size : OEM : DPI : NISSENS : APPLICATION :
	Tank size : OEM : DPI : NISSENS : APPLICATION :
	Tank size : OEM : DPI : NISSENS : APPLICATION :

HONGYAN AUTO PARTS

	Tank size : OEM : DPI : NISSENS : APPLICATION :
	Tank size : OEM : DPI : NISSENS : APPLICATION :
	Tank size : OEM : DPI : NISSENS : APPLICATION :
	Tank size : OEM : DPI : NISSENS : APPLICATION :

HONGYAN AUTO PARTS

MITSUBISHI

MI-0001

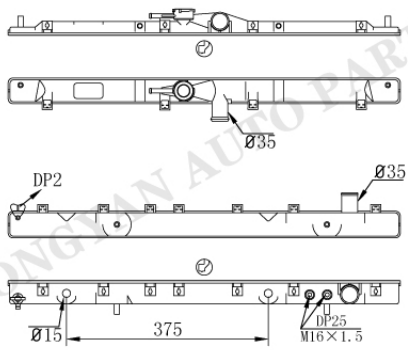

MI-0002AT/MT

Tank size :(R9×4×5×48×736)
OEM :MB660673/2/924266
DPI :1316
NISSENS :
APPLICATION :
92-96 MITSUBISHI DIAMANTE 3.0L

MI-0003

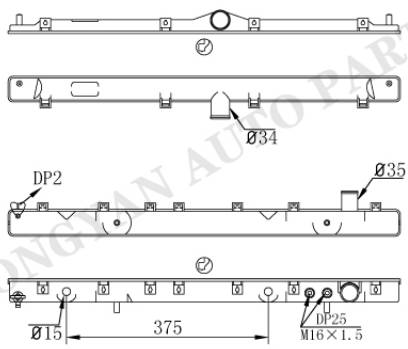

MI-0002AT/MT

Tank size :(R9×4×5×48×736)
OEM :MB605454/3
DPI :1298 1299
NISSENS :
APPLICATION :
91-99 MITSUBISHI 3000GT 3.0L
91-96 DOGE STEALTH 3.0L

MI-0004

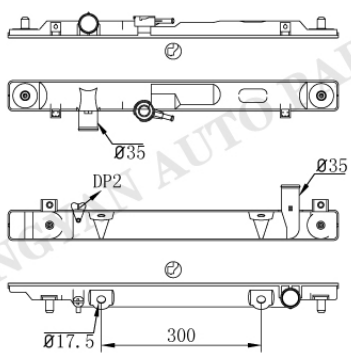

MI-0005AT/MT

Tank size :(R9×4×5×57×620)
OEM :MB890954/5
DPI :
NISSENS :
APPLICATION :
93-98 MITSUBISHI PAJERO

MI-0004

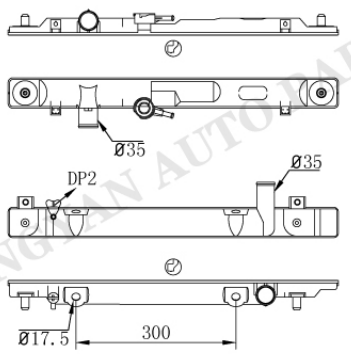

MI-0006AT/MT

Tank size :(R9×4×5×57×620)
OEM :
DPI :
NISSENS :
APPLICATION :
90- MITSUBISHI PAJERO 2.8L

HONGYAN AUTO PARTS

MI-0007

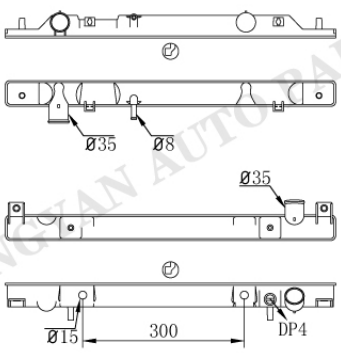

MI-0008AT/MT

Tank size :(R7.5×4.5×4.5×47.5×612.5)
OEM :MR126104
DPI :
NISSENS :
APPLICATION :

MI-0007

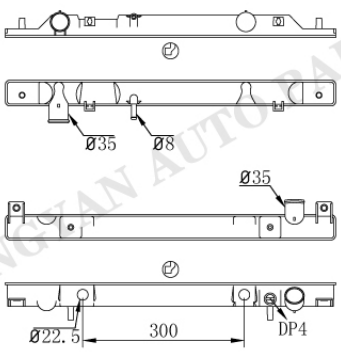

MI-0008-1AT

Tank size :(R7.5×4.5×4.5×47.5×612.5)
OEM :MR126104
DPI :
NISSENS :
APPLICATION :

MI-0007

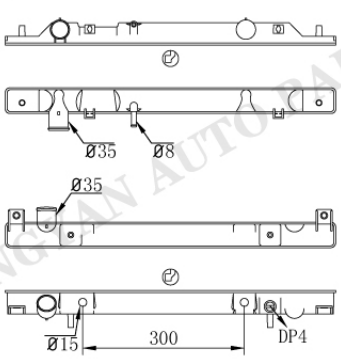

MI-0009AT/MT

Tank size :(R7.5×4.5×4.5×47.5×612.5)
OEM :
DPI :
NISSENS :
APPLICATION :

MI-0007

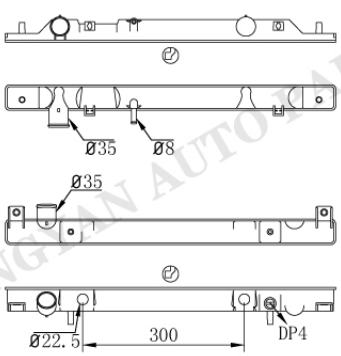

MI-0009-1AT

Tank size :(R7.5×4.5×4.5×47.5×612.5)
OEM :
DPI :
NISSENS :
APPLICATION :

HONGYAN AUTO PARTS

MI-2

MITSUBISHI

MI-0010

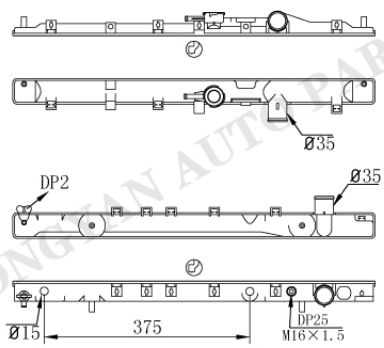

MI-0011AT/MT

Tank size : (R9×4×5×33/48×678.3)
OEM :MB924249
DPI :1921
NISSENS :
APPLICATION :
92-95 MITSUBISHI EXPO 2.4L
93-94 DODGE COLT 2.4L

MI-0012

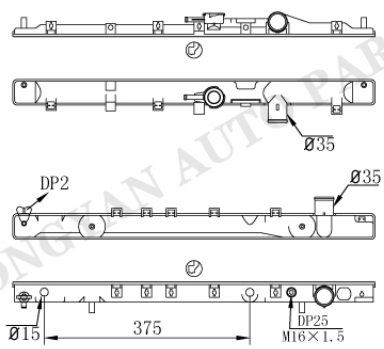

MI-0011AT/MT

Tank size :(R9×4×5×48×678.3)
OEM :MB924251
DPI :1736
NISSENS :
APPLICATION :
92-95 MITSUBISHI EXPO 2.4L
93-94 DODGE COLT 2.4L

MI-0013

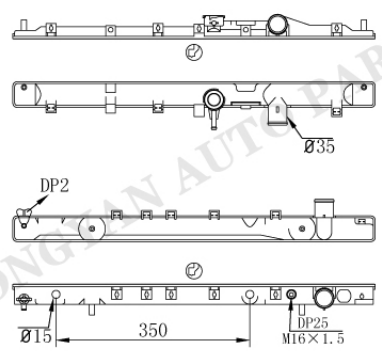

MI-0014AT/MT

Tank size :(R9×4×5×33/48×678.3)
OEM :MB66056 MB845791
MB924972
DPI :1393 1402
NISSENS :
APPLICATION :
93-95 MITSUBISHI MIRAGE 1.5/1.8L
93-95 DODGE COLT 1.5/1.8L

MI-0015

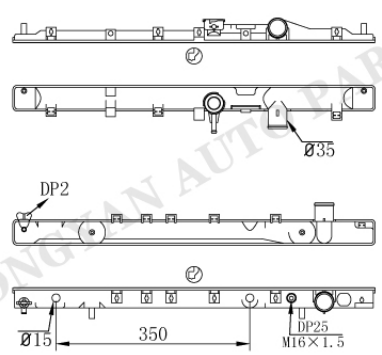

MI-0014AT/MT

Tank size :(R9×4×5×48×678.3)
OEM :MB660566 MB845791
MB724972
DPI :1956
NISSENS :
APPLICATION :
93-95 MITSUBISHI MIRAGE 1.5/1.8L
93-95 DODGE COLT 1.5/1.8L

HONGYAN AUTO PARTS

MITSUBISHI

MI-0016

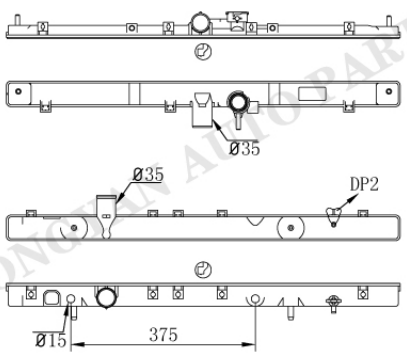

MI-0017AT/MT

Tank size :(R9×4×5×48×736)
OEM :MR312099 MBSR482M
DPI :
NISSENS :
APPLICATION :

MI-0018

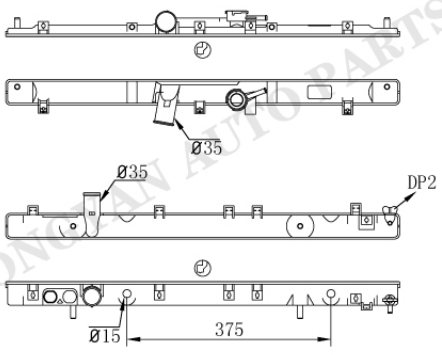

MI-0019AT/MT

Tank size :(R9×4×5×48×736)
OEM :MR212455/4 MR281688/8
DPI :
NISSENS :
APPLICATION :

MI-0018

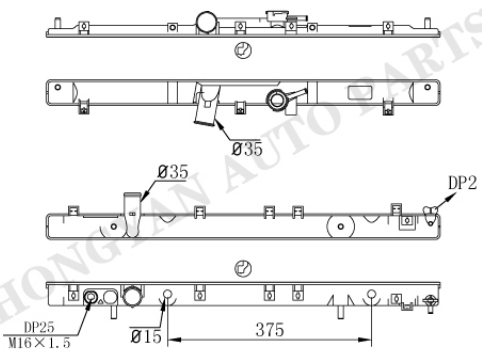

MI-0020AT/MT

Tank size :(R9×4×5×48×736)
OEM :
DPI :
NISSENS :
APPLICATION :

MI-0021

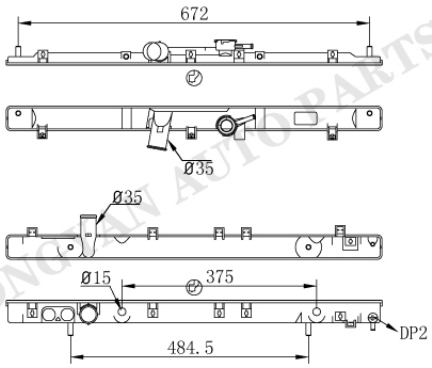

MI-0022AT/MT

Tank size :(R9×4×5×48×736)
OEM :
DPI :
NISSENS :
APPLICATION :

HONGYAN AUTO PARTS

MITSUBISHI

MI-0023

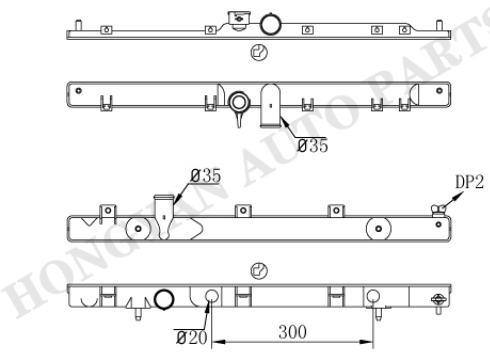

MI-0024AT/MT

Tank size :(R8.5×5×4×47×713)
OEM :MR968858 MR497744
MR431506
DPI :2448 2617
NISSENS :62894
APPLICATION :
02-07 MITSUBISHI LANCER 2.0L

MI-0023

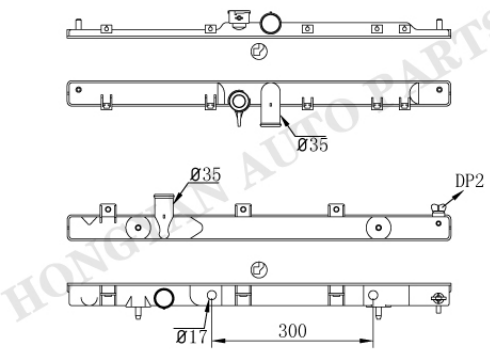

MI-0024-1AT

Tank size :(R8.5×5×4×47×713)
OEM :
DPI :
NISSENS :
APPLICATION :
02-07 MITSUBISHI LANCER 2.0L

MI-0023

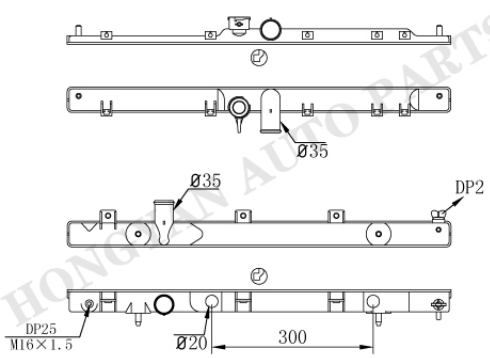

MI-0025AT/MT

Tank size :(R8.5×5×4×47×713)
OEM :
DPI :
NISSENS :
APPLICATION :
02-07 MITSUBISHI LANCER 2.0L

MI-0023

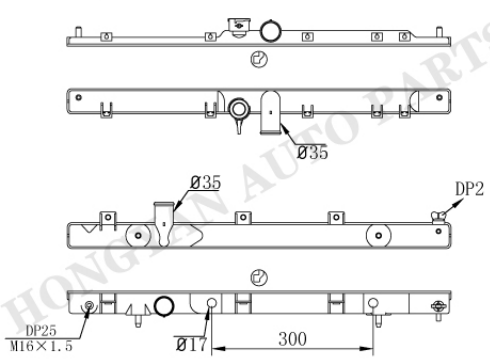

MI-0025-1AT

Tank size :(R8.5×5×4×47×713)
OEM :
DPI :
NISSENS :
APPLICATION :
02-07 MITSUBISHI LANCER 2.0L

HONGYAN AUTO PARTS

MITSUBISHI

MI-0023

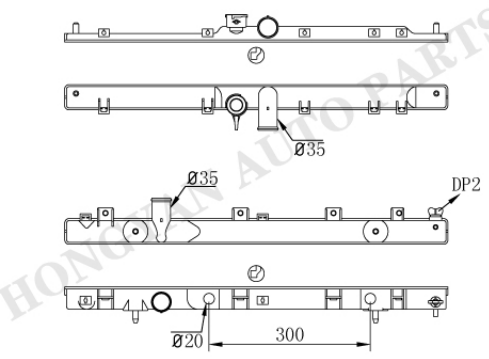

MI-0026AT/MT

Tank size : (R8.5×5×4×47×713)
OEM :
DPI :
NISSENS :
APPLICATION :
02-07 MITSUBISHI LANCER 2.0L

MI-0023

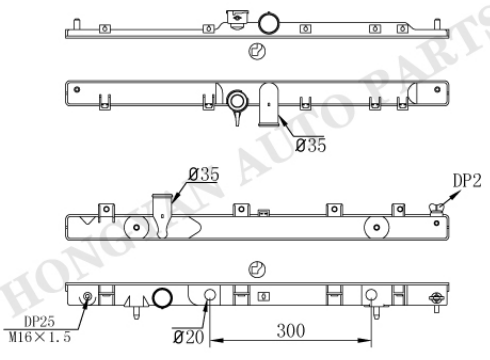

MI-0026-1AT

Tank size :(R8.5×5×4×47×713)
OEM :
DPI :
NISSENS :
APPLICATION :
02-07 MITSUBISHI LANCER 2.0L

MI-0027

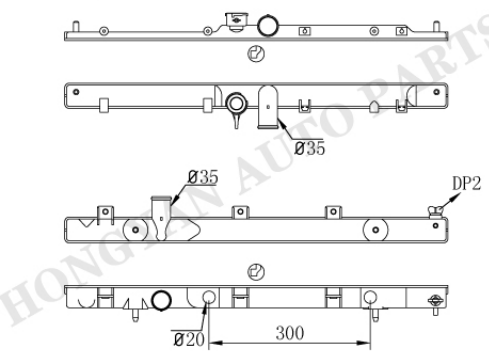

MI-0024AT/MT

Tank size : (R8.5×5×4×47×713)
OEM :
DPI :
NISSENS :
APPLICATION :
02-07 MITSUBISHI LANCER 2.0L

MI-0028

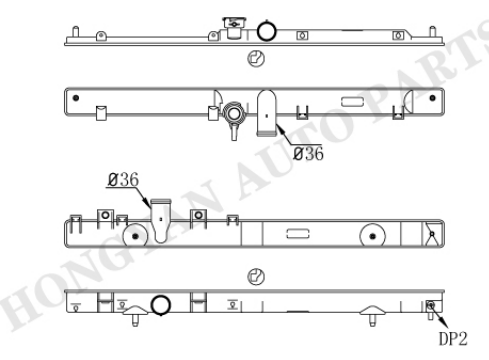

MI-0029

Tank size : (R8.5×5×4×52×713)
OEM :MR464612
DPI :2676
NISSENS :628956
APPLICATION :
03-04 MITSUBISHI LANCER 2.0L

MITSUBISHI

MI-0030

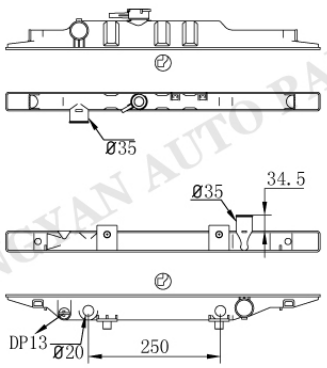

MI-0031AT/MT

Tank size :(R8×5×4×46.8×586.6)
OEM :CW749167 SW600045
DPI :
NISSENS :
APPLICATION :
DELICA

MI-0030

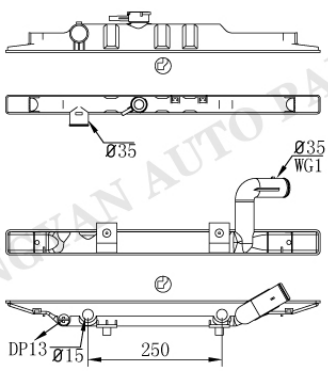

MI-0032AT/MT

Tank size :(R8×5×4×46.8×586.6)
OEM :
DPI :
NISSENS :
APPLICATION :
DELICA

MI-0030

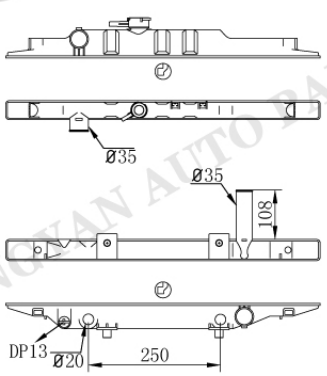

MI-0033AT/MT

Tank size :(R8×5×4×46.8×586.6)
OEM :
DPI :
NISSENS :
APPLICATION :
DELICA

MI-0034

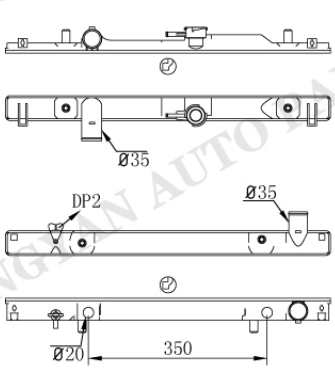

MI-0035AT/MT

Tank size :(R9×5×5×46.5×607.5)
OEM :MR355050/49
DPI :
NISSENS :
APPLICATION :

MI-7

HONGYAN AUTO PARTS

MITSUBISHI

MI-0036

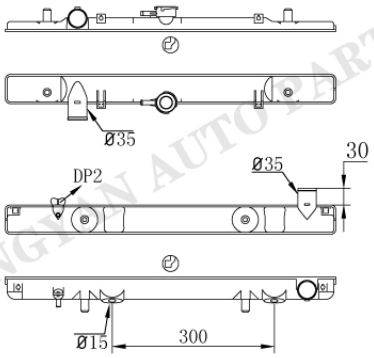

MI-0037AT/MT

Tank size :(R9.5×5×4.5×54.9×617.8)
OEM :MR127853
DPI :
NISSENS :
APPLICATION :

MI-0036

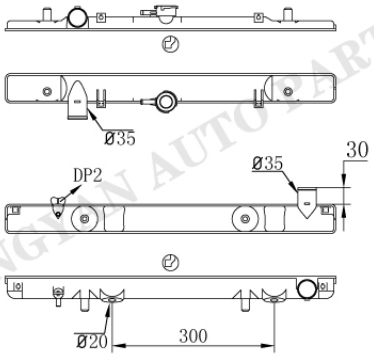

MI-0037-1AT

Tank size :(R9.5×5×4.5×54.9×617.8)
OEM :
DPI :
NISSENS :
APPLICATION :

MI-0036

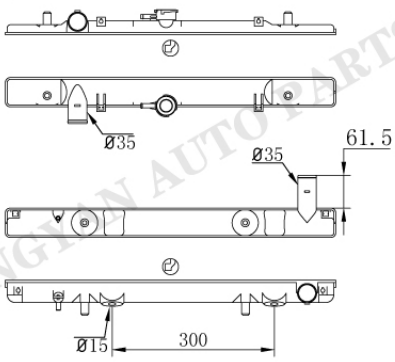

MI-0038AT/MT

Tank size :(R9.5×5×4.5×54.9×617.8)
OEM :
DPI :
NISSENS :
APPLICATION :

MI-0036

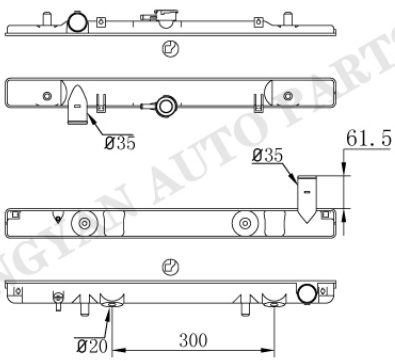

MI-0038-1AT

Tank size :(R9.5×5×4.5×54.9×617.8)
OEM :
DPI :
NISSENS :
APPLICATION :

HONGYUAN AUTO PARTS

MITSUBISHI

MI-0039

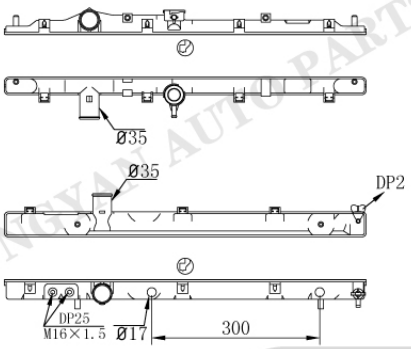

MI-0040AT/MT

Tank size :(R9×4×5×33/48×678.3)
OEM :MR187964/1 MR204532
MR299619
DPI :1907 2208
NISSENS :628591
APPLICATION :
97-02 MITSUBISHI MIRAGE 1.5/1.8L

MI-0039

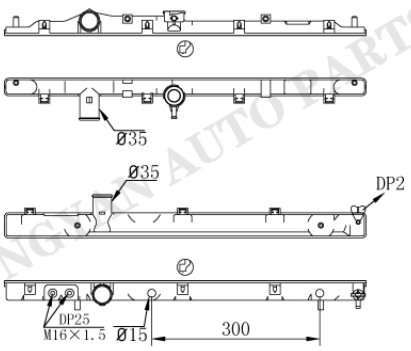

MI-0040-1AT

Tank size :(R9×4×5×33/48×678.3)
OEM :
DPI :
NISSENS :
APPLICATION :
97-02 MITSUBISHI MIRAGE 1.5/1.8L

MI-0041

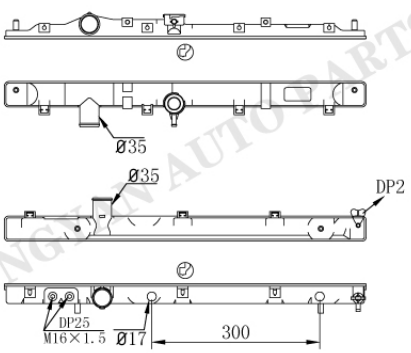

MI-0040AT/MT

Tank size :(R9×4×5×48×678.3)
OEM :
DPI :
NISSENS :
APPLICATION :
97-02 MITSUBISHI MIRAGE 1.5/1.8L

MI-0042

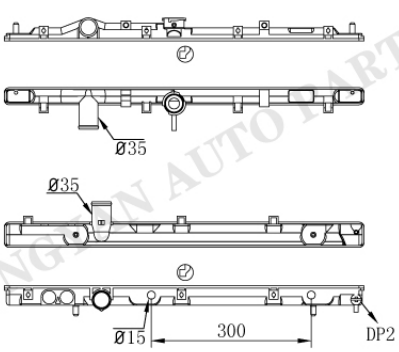

MI-0043AT/MT

Tank size :(R9×4×5×32.3/47×675.5)
OEM :
DPI :
NISSENS :
APPLICATION :
97-02 MITSUBISHI MIRAGE 1.5/1.8L

HONGYAN AUTO PARTS

MI-0042

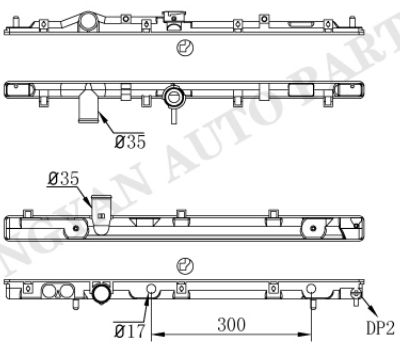

MI-0043-1AT

Tank size :(R9×4×5×32.3/47×675.5)
OEM :
DPI :
NISSENS :
APPLICATION :
97-02 MITSUBISHI MIRAGE 1.5/1.8L

MI-0044

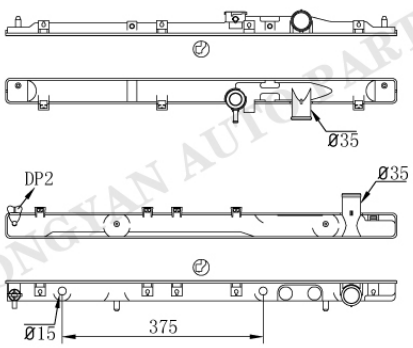

MI-0045AT/MT

Tank size :(R9×4×5×48×736)
OEM :MB845810/08/12/14
DPI :1838
NISSENS :
APPLICATION :
94-98 MITSUBISHI GALANT 2.4L

MI-0046

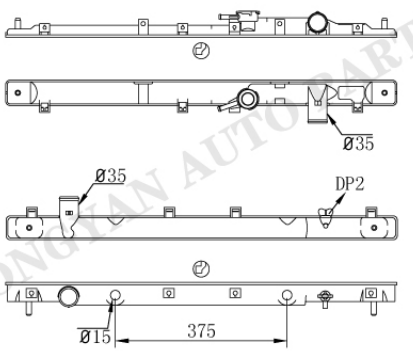

MI-0047AT/MT

Tank size :(R9×4×5×48×736)
OEM :MR160763 MR204365
DPI :1906
NISSENS :
APPLICATION :
97-04 MITSUBISHI DIAMANTE 3.5L

MI-0048

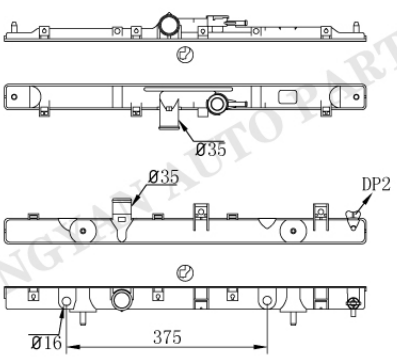

MI-0049AT/MT

Tank size :(R9×4×5×48×678.3)
OEM :MR431239 MR373172
DPI :
NISSENS :
APPLICATION :

HONGYAN AUTO PARTS

MITSUBISHI

MI-0050

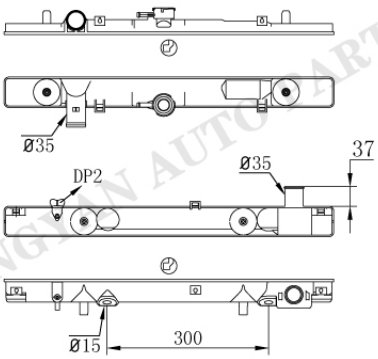

MI-0051AT/MT

Tank size :(R9×4×5×57×620)
OEM :MR127853
DPI :
NISSENS :
APPLICATION :
PICKUP L200

MI-0050

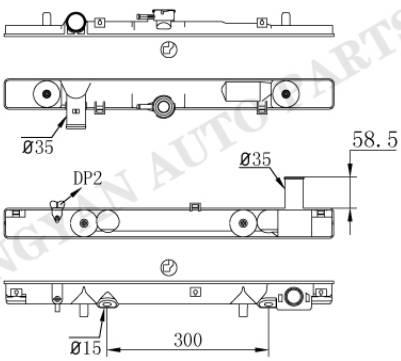

MI-0051-1AT

Tank size :(R9×4×5×57×620)
OEM :
DPI :
NISSENS :
APPLICATION :
PICKUP L200

MI-0050

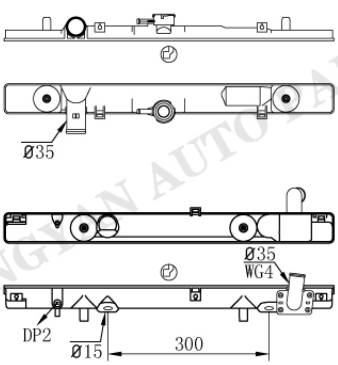

MI-0052AT/MT

Tank size :(R9×4×5×57×620)
OEM :MR281023
DPI :
NISSENS :
APPLICATION :
PICKUP L200

MI-0053

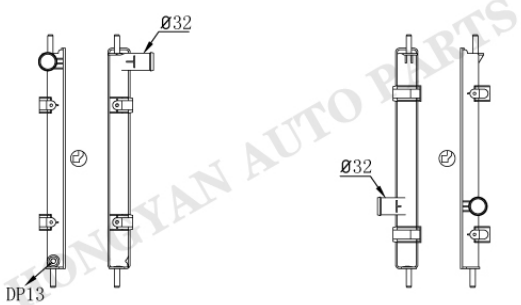

MI-0054

Tank size :(R8.5×5×4×42×415)
OEM :
DPI :
NISSENS :
APPLICATION :

HONGYAN AUTO PARTS

MI-11

MITSUBISHI

MI-0055

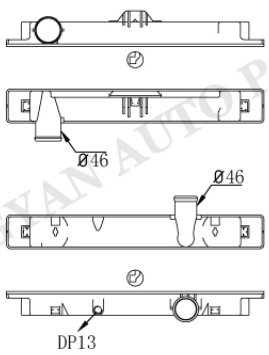

MI-0056

Tank size :(R8.5×5×4.5×63.5×484)
OEM :
DPI :
NISSENS :
APPLICATION :
FUSO CANTER 3.5L

MI-0057

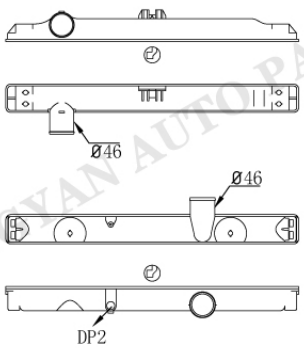

MI-0058

Tank size :(R9×4.5×4.5×53×543)
OEM :MC127001
DPI :
NISSENS :
APPLICATION :
99- FUSO CANTER

MI-0059

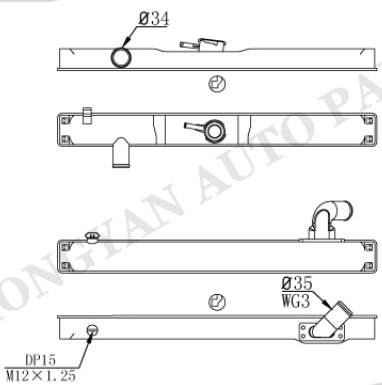

MI-0060

Tank size :(R9×5×4.5×62×598.2)
OEM :MB356155 MB356850
DPI :
NISSENS :62840
APPLICATION :
86-91 MITSUBISHI MONTERO 2.3/2.5L
84-91 MITSUBISHI PAJERO 2.3/2.5L
84-91 MITSUBISHI SHOGUN 2.3/2.5L

MI-0061

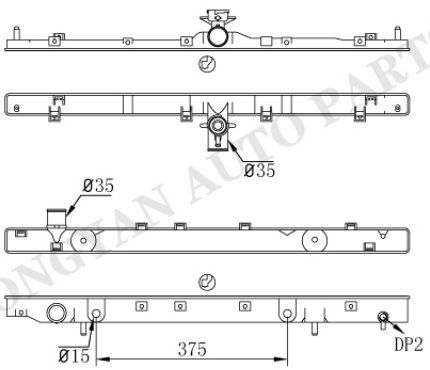

MI-0062AT/MT

Tank size :(R9×4×5×48×755)
OEM :MR993562 MN171217
DPI :
NISSENS :
APPLICATION :

MITSUBISHI

MI-0063

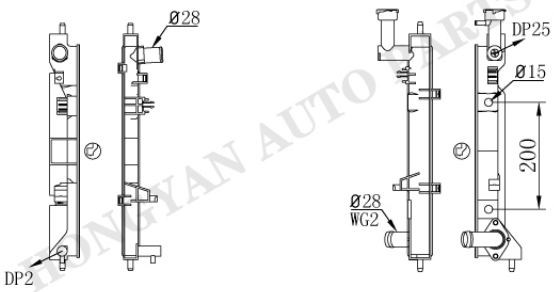

MI-0064AT/MT

Tank size :(R9×4×5×33/48×400)
OEM :MR993323
DPI :
NISSENS :
APPLICATION :
04- MITSUBISHI COLT

MI-0065

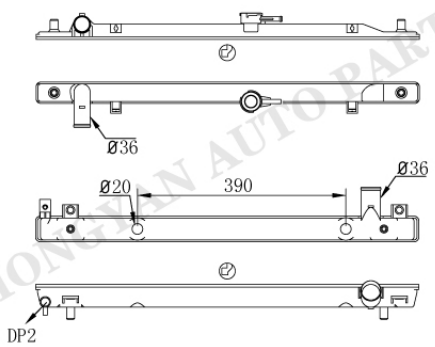

MI-0066AT/MT

Tank size :(R9×4×5×40/48×717)
OEM :MR993037 MR404864
DPI :2467 2468 2752
NISSENS :
APPLICATION :
01-06 MITSUBISHI MONTERO 3.5/3.8L

MI-0065

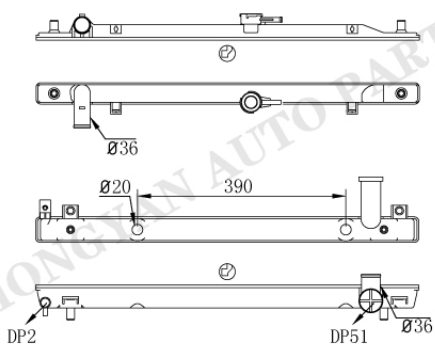

MI-0067AT/MT

Tank size :(R9×4×5×40/48×717)
OEM :
DPI :
NISSENS :
APPLICATION :
01-06 MITSUBISHI MONTERO 3.5/3.8L

MI-0068

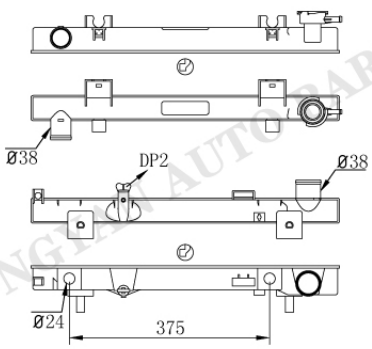

MI-0069AT/MT

Tank size :(R4.5×5×4.5×47.5/55×576.5)
OEM :
DPI :2883
NISSENS :
APPLICATION :
06-09 MITSUBISHI BAIDER 3.7/4.7L
05-10 DOGE DAKOTA 3.7/4.7L

HONGYAN AUTO PARTS

MITSUBISHI

MI-0070

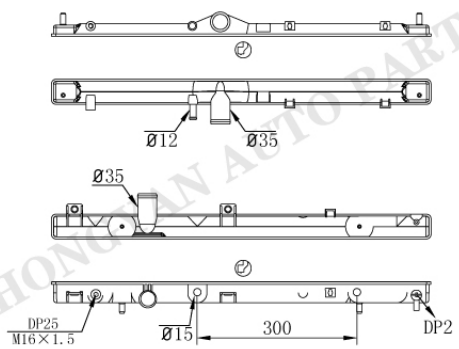

MI-0071AT/MT

Tank size :(R8.5×5×5×47×713)
OEM :
DPI :
NISSENS :
APPLICATION :
01- MITSUBISHI LANCER

MI-0070

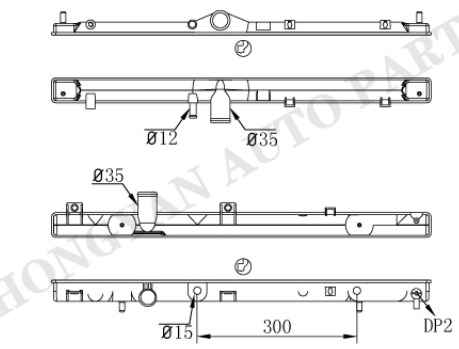

MI-0071-1AT/MT

Tank size :(R8.5×5×5×47×713)
OEM :
DPI :
NISSENS :
APPLICATION :
01- MITSUBISHI LANCER

MI-0072

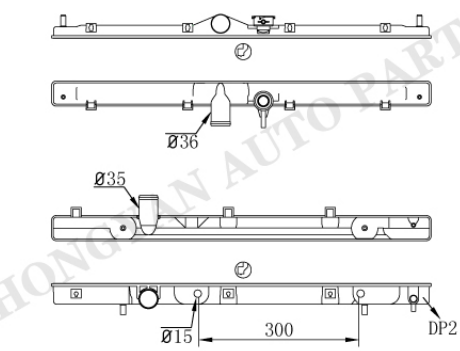

MI-0073AT/MT

Tank size :(R8.5×5×5×47×713)
OEM :
DPI :
NISSENS :
APPLICATION :
95-99 MITSUBISHI LANCER

MI-0074

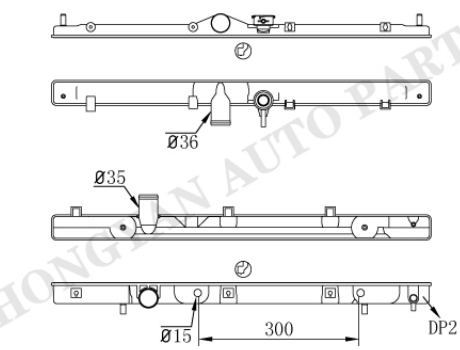

MI-0073AT/MT

Tank size : (R8.5×5×5×47×713)
OEM :
DPI :
NISSENS :
APPLICATION :
95-99 MITSUBISHI LANCER

HONGLIAN AUTO PARTS

MITSUBISHI

MI-0075

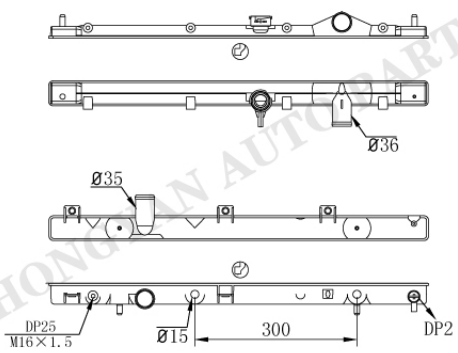

MI-0076AT/MT

Tank size :(R9×4×4.5×47×713)
OEM :
DPI :
NISSENS :
APPLICATION :
01- MITSUBISHI LANCER

MI-0075

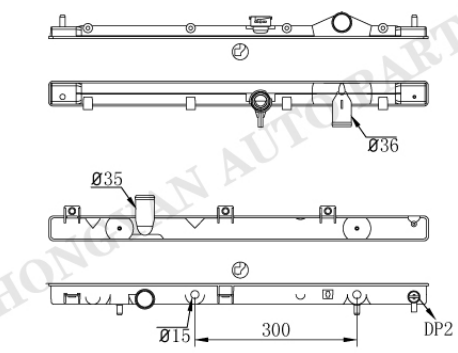

MI-0076-1AT/MT

Tank size :(R9×4×4.5×47×713)
OEM :
DPI :
NISSENS :
APPLICATION :
01- MITSUBISHI LANCER

MI-0077

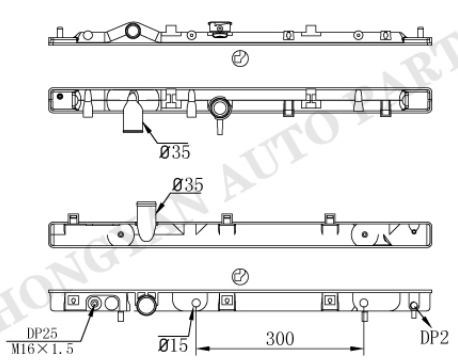

MI-0078AT/MT

Tank size :(R8.5×5×5×47×713)
OEM :
DPI :
NISSENS :
APPLICATION :
95-99 MITSUBISHI LANCER

MI-0079

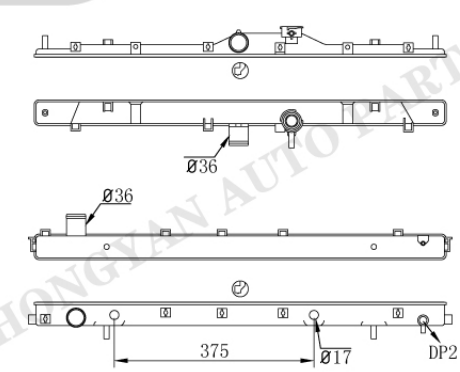

MI-0080AT/MT

Tank size :(R9×4×5×48×774)
OEM :
DPI :2675
NISSENS :
APPLICATION :
04-10 MITSUBISHI ENDEAVOR 3.8L

HONGYAN AUTO PARTS

MITSUBISHI

MI-0081

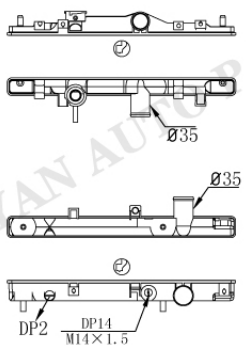

MI-0082

Tank size :(R8.5×4×5×33/40×429)
OEM :
DPI :
NISSENS :
APPLICATION :
92- MITSUBISHI COLT 1.3L

MI-0081

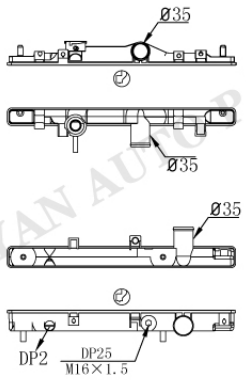

MI-0082-1

Tank size :(R8.5×4×5×33/40×429)
OEM :
DPI :
NISSENS :
APPLICATION :
92- MITSUBISHI COLT 1.3L

MI-0083

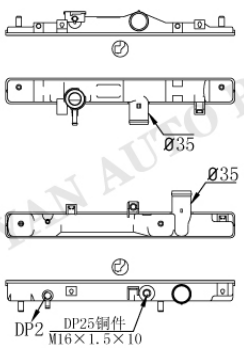

MI-0084

Tank size :(R8.5×4×5×48×428)
OEM :
DPI :
NISSENS :
APPLICATION :
92- MITSUBISHI COLT

MI-0085

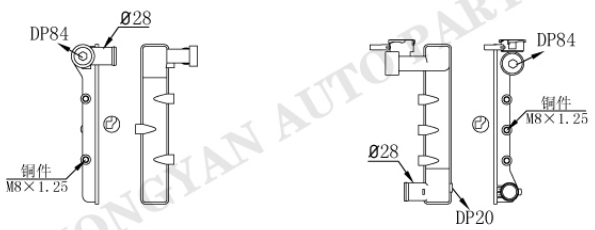

MI-0086

Tank size :(R8.5×5×5×52×262.5)
OEM :
DPI :
NISSENS :
APPLICATION :
99- VARICA

HONGYAN AUTO PARTS

MITSUBISHI

MI-0087

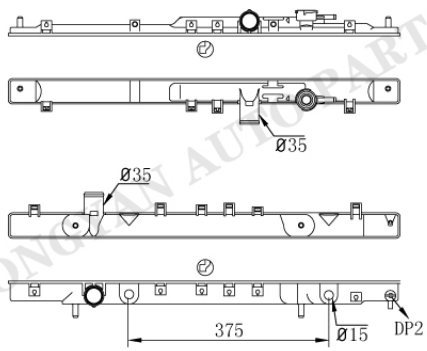

MI-0088AT/MT

Tank size :(R9×5×5×48×736)
OEM :MR373104 MR431145
MR385757
DPI :2410 2301 2405
NISSENS :
APPLICATION :
00-05 MITSUBISHI ECLIPSE 3.0L
01-05 DODGE STRATUS 2.7/3.0L
01-03 CHRYSLER SEBRING 2.7/3.0L

MI-0087

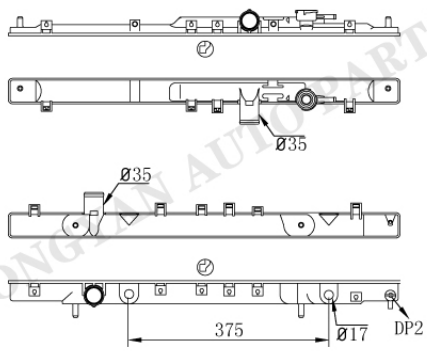

MI-0088-1AT

Tank size :(R9×5×5×48×736)
OEM :MR373104 MR431145
MR385757
DPI :2410 2301 2405
NISSENS :
APPLICATION :
00-05 MITSUBISHI ECLIPSE 3.0L
01-05 DODGE STRATUS 2.7/3.0L
01-03 CHRYSLER SEBRING 2.7/3.0L

MI-0087

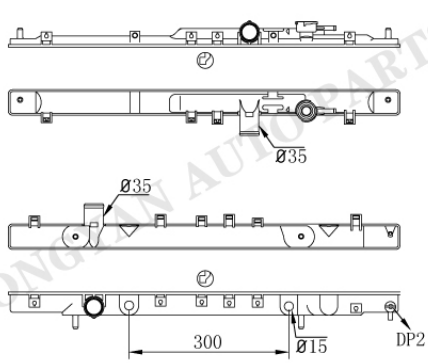

MI-0089AT/MT

Tank size :(R9×5×5×48×736)
OEM :MR373103 MR312229/1
DPI :2438 2433 2406 2300
NISSENS :
APPLICATION :
00-05 MITSUBISHI ECLIPSE 2.4L
01-05 DODGE STRATUS 2.4L
01-03 CHRYSLER SEBRING 2.4L

MI-0087

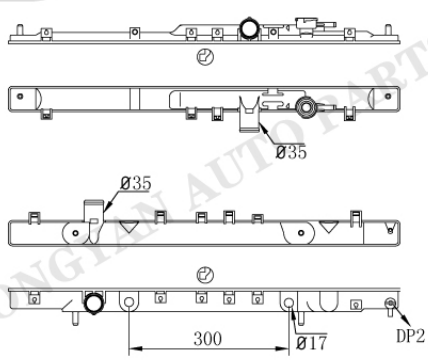

MI-0089-1AT

Tank size : (R9×5×5×48×736)
OEM :MR373103 MR312229/1
DPI :2438 2433 2406 2300
NISSENS :
APPLICATION :
00-05 MITSUBISHI ECLIPSE 2.4L
01-05 DODGE STRATUS 2.4L
01-03 CHRYSLER SEBRING 2.4L

HONGTAN AUTO PARTS

MITSUBISHI

MI-0090

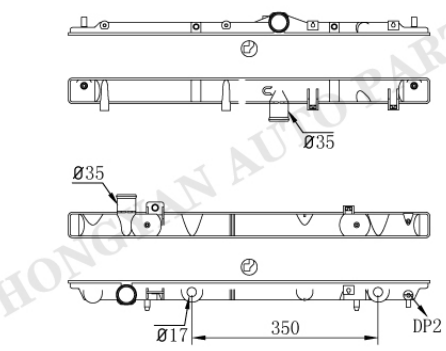

MI-0091AT/MT

Tank size : (R9×4×5×48×679.5)
OEM :MB299522
DPI :
NISSENS :
APPLICATION :
95- MITSUBISHI CARISMA 1.6L

MI-0090

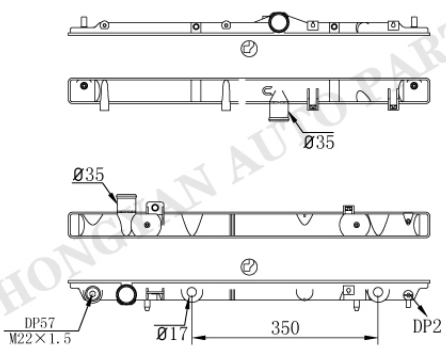

MI-0091-1AT/MT

Tank size : (R9×4×5×48×679.5)
OEM :
DPI :
NISSENS :
APPLICATION :
95- MITSUBISHI CARISMA 1.6L

MI-0092

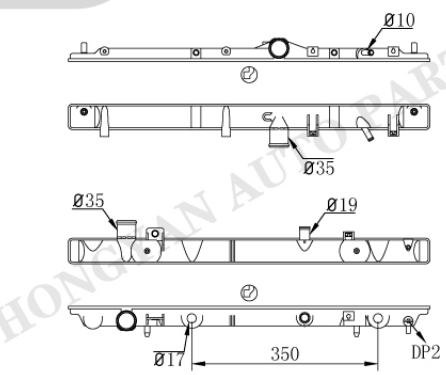

MI-0093AT/MT

Tank size : (R9×4×5×48×679.5)
OEM :MB925662 MB187415
DPI :
NISSENS :
APPLICATION :
95-97 MITSUBISHI CARISMA 1.6L

MI-0092

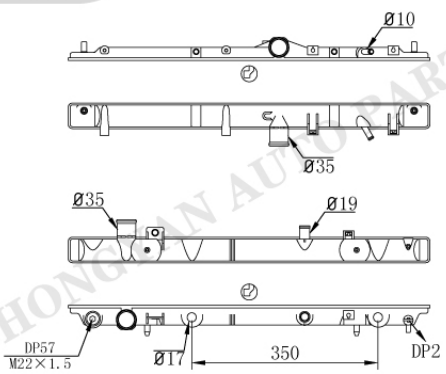

MI-0093-1AT/MT

Tank size : (R9×4×5×48×679.5)
OEM :
DPI :
NISSENS :
APPLICATION :

HONGYAN AUTO PARTS

MITSUBISHI

MI-0094

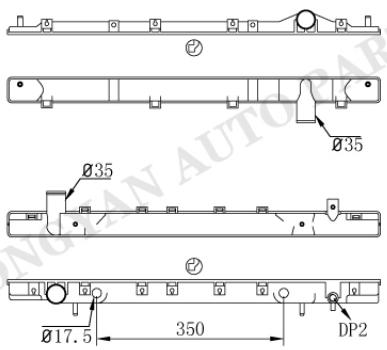

MI-0095AT/MT

Tank size :(R8×5×5×48×698)
OEM :MR127910/1
DPI :2023
NISSENS :
APPLICATION :
95-98 MITSUBISHI ECLIPSE 2.0L
95-99 DODGE AVENGER 2.0L
95-99 CHRYSLER SEBRING 2.0L

MI-0094

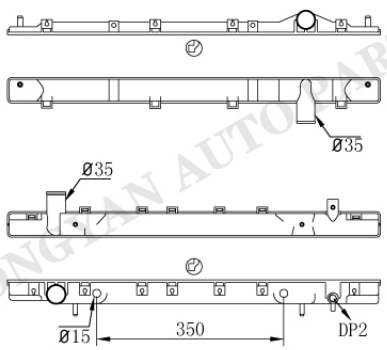

MI-0095-1AT

Tank size :(R8×5×5×48×698)
OEM :MR127910/1
DPI :2023
NISSENS :
APPLICATION :
95-98 MITSUBISHI ECLIPSE 2.0L
95-99 DODGE AVENGER 2.0L
95-99 CHRYSLER SEBRING 2.0L

MI-0096

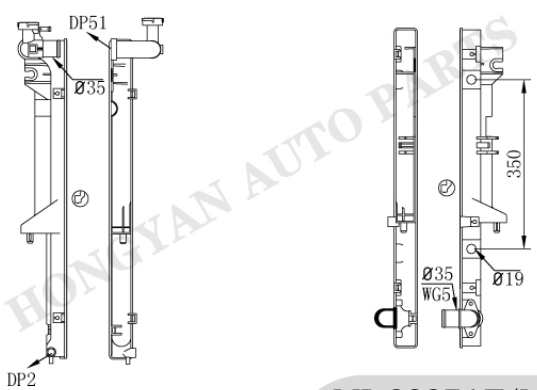

MI-0097AT/MT

Tank size :(R8.5×4×5×48×660)
OEM :MN135033 1350A314
DPI :
NISSENS :
APPLICATION :
07- MITSUBISHI L200

MI-0096

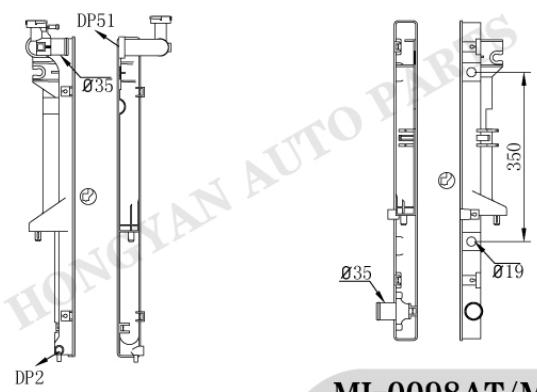

MI-0098AT/MT

Tank size :(R8.5×4×5×48×660)
OEM :
DPI :
NISSENS :
APPLICATION :
07- MITSUBISHI L200

HONGYAN AUTO PARTS

MI-19

MITSUBISHI

MI-0099AT/MT

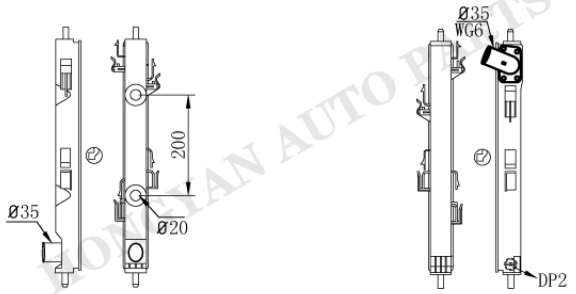

MI-0100

Tank size :(R8.5×5×4×46.5×431)
OEM :MN156092 1350A297
DPI :2979
NISSENS :628952
APPLICATION :
08-10 MITSUBISHI LANCER 2.0/2.4L

MI-0101

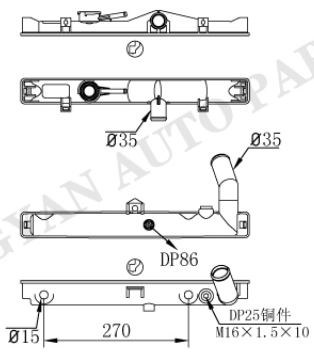

MI-0102AT/MT

Tank size :(R8.5×4×5×48×428)
OEM :
DPI :
NISSENS :
APPLICATION :

MI-0101

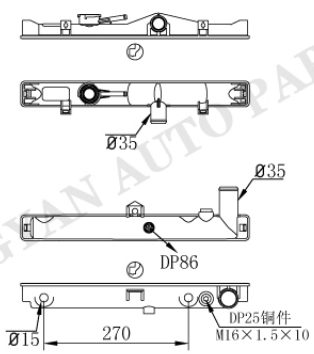

MI-0103AT/MT

Tank size :(R8.5×4×5×48×428)
OEM :
DPI :
NISSENS :
APPLICATION :

MI-0104

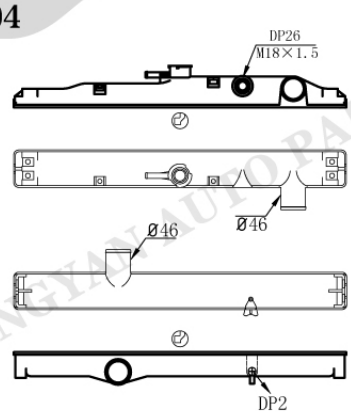

MI-0105

Tank size :(R9×4.5×4.5×70×623)
OEM :
DPI :
NISSENS :
APPLICATION :
FUSO FIGHTER

HONGYAN AUTO PARTS

MITSUBISHI

MI-0106

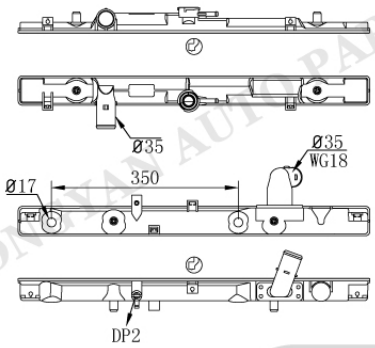

MI-0107AT/MT

Tank size :(R8×4×5×55×659)
OEM :MR258668/9 MR571147
DPI :
NISSENS :62895A
APPLICATION :
96- MITSUBISHI L200 2.5L
96- MITSUBISHI MONTERO SPORT 2.5L
96- MITSUBISHI PAJERO SPORT 2.5L
96- MITSUBISHI SHOGUN SPORT 2.5L

MI-0106

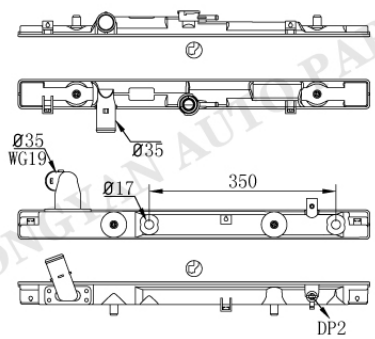

MI-0108AT/MT

Tank size :(R8×4×5×55×659)
OEM :MR239626/7
DPI :2278
NISSENS :68154
APPLICATION :
96- MITSUBISHI MONTERO SPORT 3.0L
96- MITSUBISHI PAJERO SPORT 3.0L
96- MITSUBISHI SHOGUN SPORT 3.0L

MI-0106

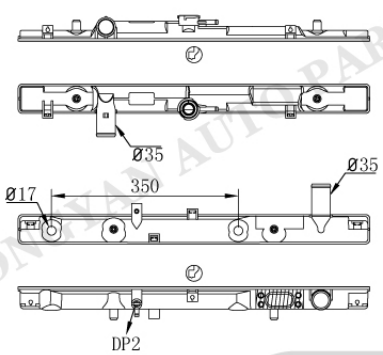

MI-0109AT/MT

Tank size :(R8×4×5×55×659)
OEM :
DPI :2073
NISSENS :
APPLICATION :
97-98 MITSUBISHI MONTERO SPORT 2.4L

MI-0106

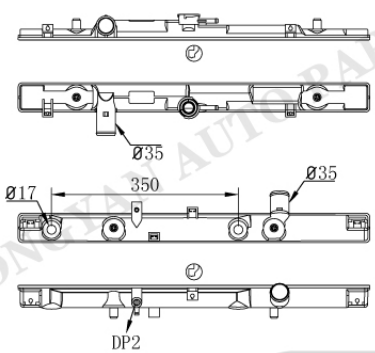

MI-0110AT/MT

Tank size :(R8×4×5×55×659)
OEM :
DPI :
NISSENS :
APPLICATION :

MI-21

MITSUBISHI

MI-0111

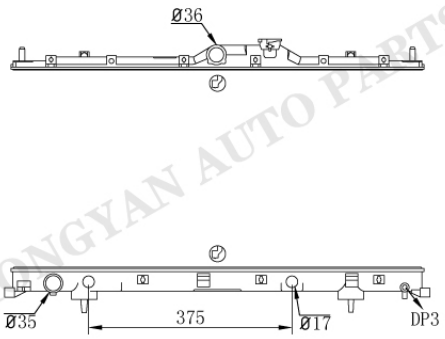

MI-0112AT/MT

Tank size :(R9×4×5×48×774)
OEM :
DPI :2842 2843
NISSENS :
APPLICATION :
06-12 MITSUBISHI ECLIPSE 2.4L

MI-0113

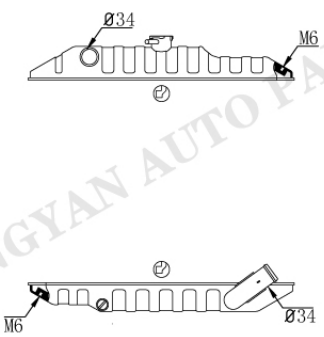

MI-0114

Tank size :(R8.5×4×4.5×52×499)
OEM :
DPI :
NISSENS :
APPLICATION :
MITSUBISHI DELICA

MI-0115

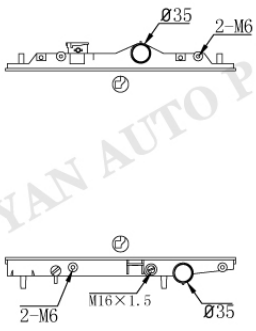

MI-0116

Tank size :(R10×5×4.5×36×432)
OEM :
DPI :
NISSENS :
APPLICATION :
91-95 MITSUBISHI GOLT 1.3/1.5/1.8L

MI-0117



MI-0118

Tank size :(R8.5×5×4×46×388)
OEM :
DPI :
NISSENS :
APPLICATION :
01-05 MITSUBISHI MAGIC

HONGYAN AUTO PARTS

MITSUBISHI

MI-0119



Tank size :(R8.5×5×4×46×388)
OEM :
DPI :
NISSENS :
APPLICATION :
10- MITSUBISHI MAGIC

MI-0118

MI-0059

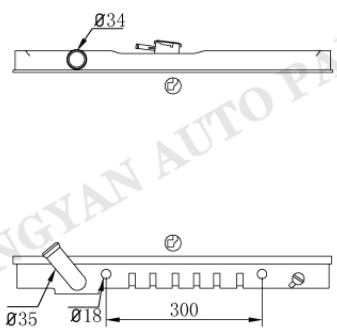

Tank size :(R9×5×4.5×62×598.2)
OEM :MB538805 MB660076
DPI :
NISSENS :62884
APPLICATION :
88-91 MITSUBISHI PAJERO

MI-0120AT/MT

MI-0121

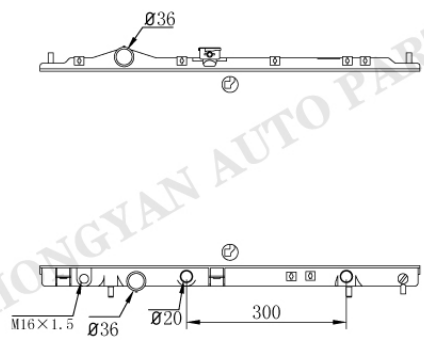

Tank size :(R8×5×4×47×713)
OEM :
DPI :
NISSENS :
APPLICATION :
MITSUBISHI LANCER

MI-0122AT/MT

MI-0123

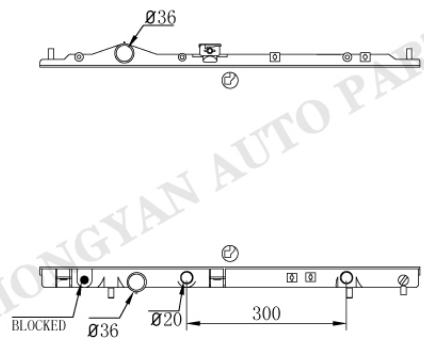

Tank size :(R8×5×4×47×713)
OEM :
DPI :
NISSENS :
APPLICATION :
MITSUBISHI LANCER

MI-0124AT/MT

HONGYAN AUTO PARTS

MI-0125

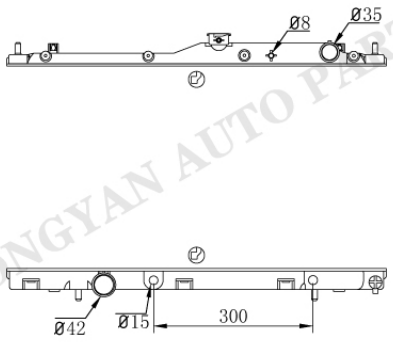

MI-0126AT/MT

Tank size :(R8.5×5×4×46.6×712)
OEM :
DPI :
NISSENS :
APPLICATION :
10- MITSUBISHI LANCER

MI-0127

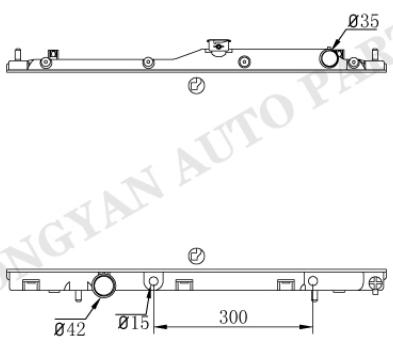

MI-0126AT/MT

Tank size :(R8.5×5×4×46.6×712)
OEM :
DPI :
NISSENS :
APPLICATION :
10- MITSUBISHI LANCER

MI-0128

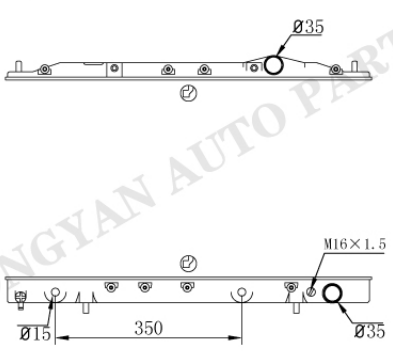

MI-0129AT/MT

Tank size :(R9×5×5×50×687.3)
OEM :
DPI :1145 1949
NISSENS :
APPLICATION :
90-94 MITSUBISHI ECLIPSE 1.8/2.0L

MI-0130

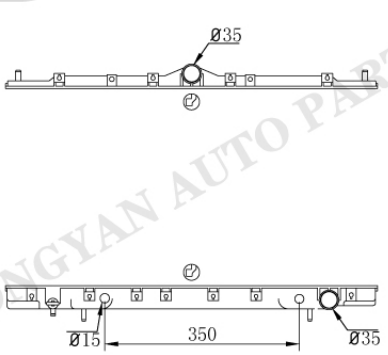

MI-0131AT/MT

Tank size :(R9×5×5×48×698)
OEM :
DPI :2024
NISSENS :
APPLICATION :
95-99 MITSUBISHI ECLIPSE 2.0L

HONGYAN AUTO PARTS

MITSUBISHI

MI-0041

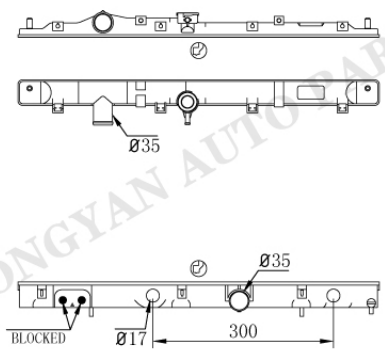

MI-0132AT/MT

Tank size :(R9×4×5×48×678.3)
OEM :
DPI :
NISSENS :
APPLICATION :
10- MITSUBISHI LANCER V3

MI-0041

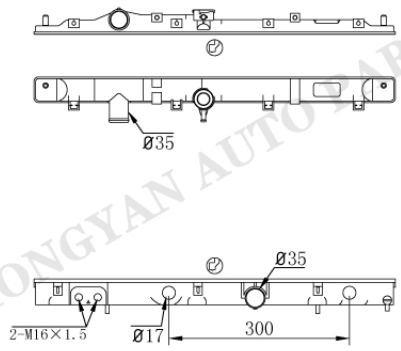

MI-0133AT/MT

Tank size :(R9×4×5×48×678.3)
OEM :
DPI :
NISSENS :
APPLICATION :
10- MITSUBISHI LANCER V3

MI-0134

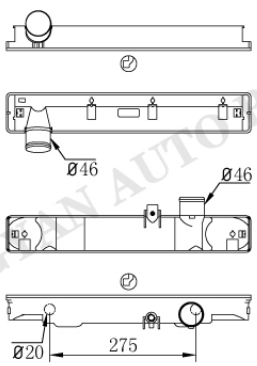

MI-0135AT/MT

Tank size :(R8.5×5×4.5×70×460)
OEM :
DPI :
NISSENS :
APPLICATION :
02-05 FUSO CANTER

MI-0134

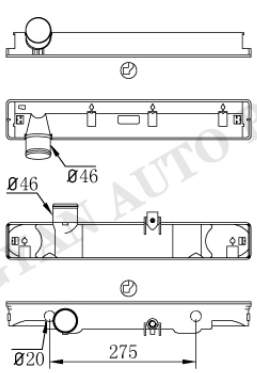

MI-0136AT/MT

Tank size :(R8.5×5×4.5×70×460)
OEM :
DPI :
NISSENS :
APPLICATION :
02-05 FUSO CANTER

HONGYAN AUTO PARTS

MI-25

MITSUBISHI

MI-0137

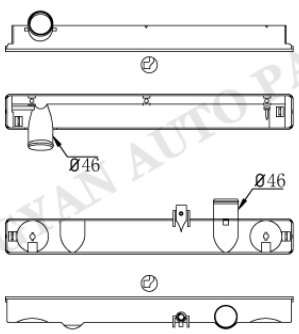

MI-0138

Tank size :(R9×4.5×4.5×69×536)
OEM :
DPI :
NISSENS :
APPLICATION :
FUSO CANTER

MI-0137

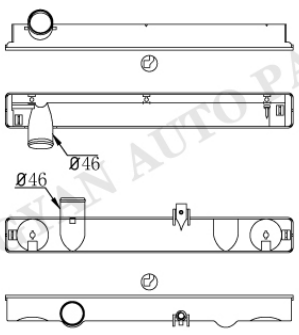

MI-0139

Tank size :(R9×4.5×4.5×69×536)
OEM :
DPI :
NISSENS :
APPLICATION :
FUSO CANTER

MI-0137

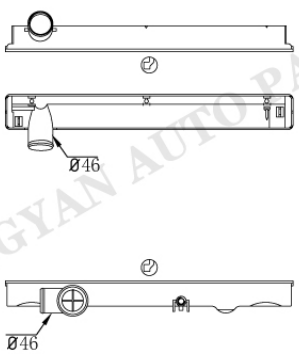

MI-0140

Tank size :(R9×4.5×4.5×69×536)
OEM :
DPI :
NISSENS :
APPLICATION :
FUSO CANTER

MI-0141

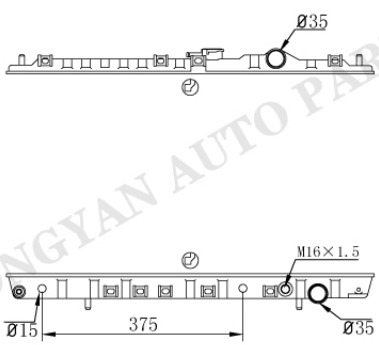

MI-0142AT/MT

Tank size :(R10.5×5×5×50×687)
OEM :
DPI :233
NISSENS :
APPLICATION :
89-92 MITSUBISHI GALANT 2.0L

HONGYAN AUTO PARTS

MITSUBISHI

MI-0143

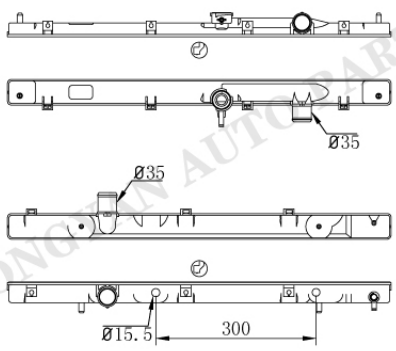

MI-0144AT/MT

Tank size :(R8×4×4.5×48×716.4)
OEM :
DPI :
NISSENS :
APPLICATION :
MITSUBISHI LANCER

MI-0145

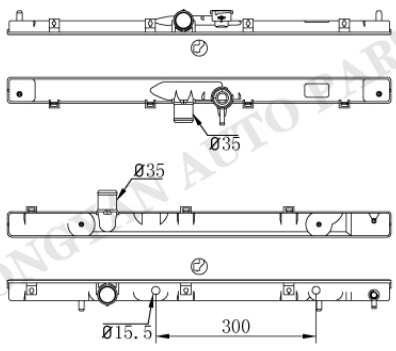

MI-0144AT/MT

Tank size :(R8×4×4.5×48×716.4)
OEM :
DPI :
NISSENS :
APPLICATION :
01- MITSUBISHI LANCER

MI-0146

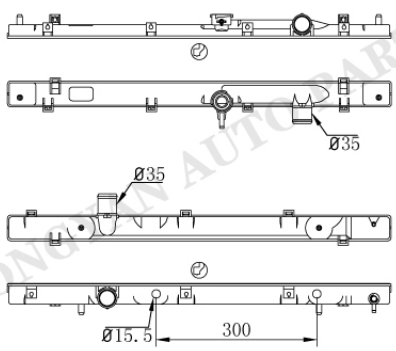

MI-0147AT/MT

Tank size :(R8×4×4.5×48×716.4)
OEM :
DPI :
NISSENS :
APPLICATION :
07- MITSUBISHI LANCER

MI-0146

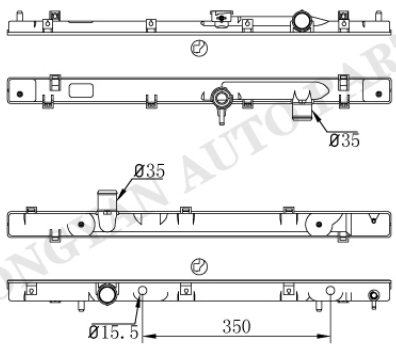

MI-0148AT/MT

Tank size :(R8×4×4.5×48×716.4)
OEM :
DPI :
NISSENS :
APPLICATION :
07- MITSUBISHI LANCER

HONGYAN AUTO PARTS

MITSUBISHI

MI-0149

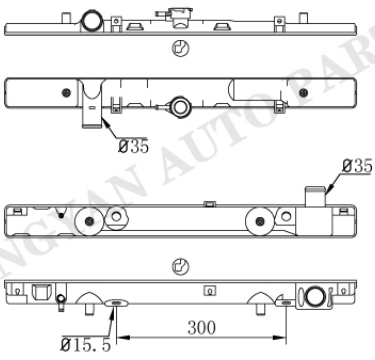

MI-0150AT/MT

Tank size :(R9×4×5×57×659)
OEM :
DPI :
NISSENS :
APPLICATION :
96-00 MITSUBISHI STORM L200

MI-0149

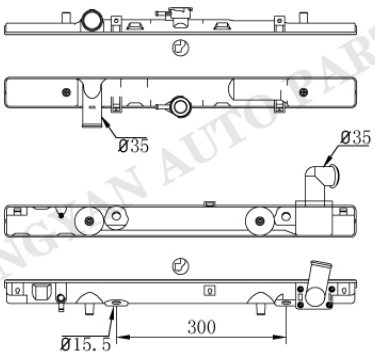

MI-0151AT/MT

Tank size :(R9×4×5×57×659)
OEM :
DPI :
NISSENS :
APPLICATION :
96-00 MITSUBISHI STORM L200

MI-0152

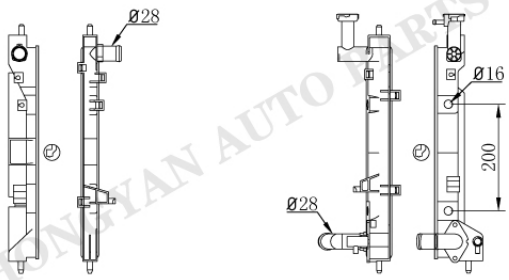

MI-0153AT/MT

Tank size :(R9×4×5×33/48×400)
OEM :
DPI :
NISSENS :
APPLICATION :

MI-0154

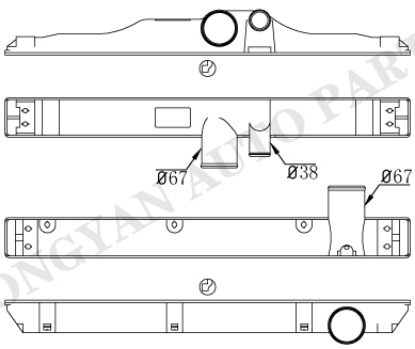

MI-0155

Tank size :(R8×4.5×4.5×75×760)
OEM :
DPI :
NISSENS :
APPLICATION :
96-03 FUSO SUPER GREAT

HONGYAN AUTO PARTS

MITSUBISHI

MI-0154

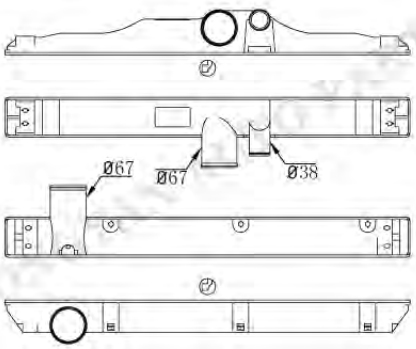

MI-0156

Tank size : (R8×4.5×4.5×75×760)
OEM : ME293118
DPI :
NISSENS :
APPLICATION :
96-03 FUSO SUPER GREAT

MI-0157

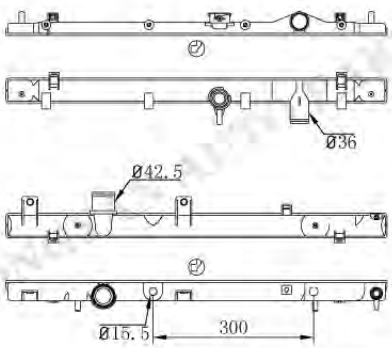

MI-0158AT/MT

Tank size :(R8×5×4×46.5×712.5)
OEM :
DPI :
NISSENS :
APPLICATION :
09- MITSUBISHI LANCER

MI-0159

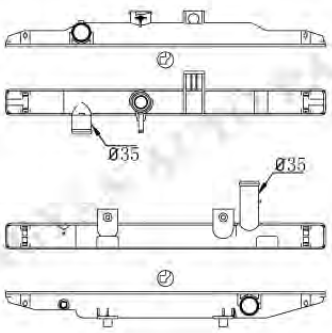

MI-0160

Tank size :(R9.5×4.5×4.5×47×583)
OEM :
DPI :
NISSENS :
APPLICATION :
07- MITSUBISHI DELICA

MI-0159

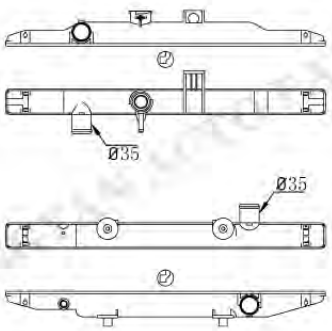

MI-0161

Tank size :(R9.5×4.5×4.5×47×583)
OEM :
DPI :
NISSENS :
APPLICATION :
07- MITSUBISHI DELICA

MI-29

MITSUBISHI

MI-0162

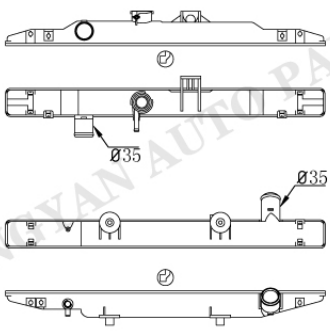

MI-0163

Tank size :(R9.5×4.5×5×53.5×606)
OEM :
DPI :
NISSENS :
APPLICATION :
MITSUBISHI L300

MI-0134

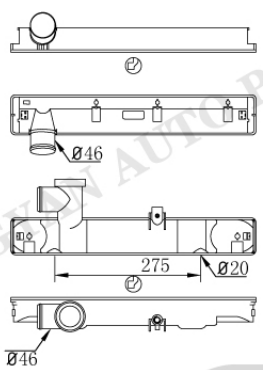

MI-0164AT/MT

Tank size :(R8.5×5×4.5×70×460)
OEM :
DPI :
NISSENS :
APPLICATION :
02-05 FUSO CANTER

MI-0165

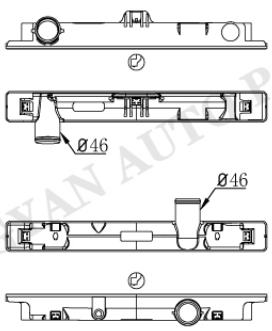

MI-0166

Tank size :(R9×4×4.5×57×486)
OEM :MC127000
DPI :
NISSENS :
APPLICATION :
95- FUSO CANTER

MI-0167

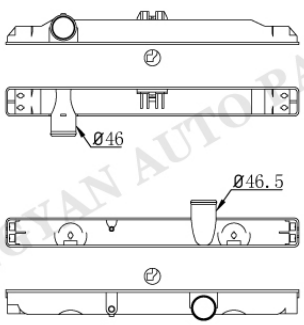

MI-0168

Tank size :(R9.5×4.5×4.5×54×545)
OEM :
DPI :
NISSENS :
APPLICATION :
FUSO CANTER

HONGYAN AUTO PARTS

MITSUBISHI

MI-0169

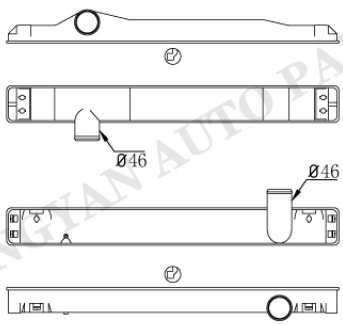

MI-0170

Tank size :(R9×4.5×4.5×70×623)
OEM :
DPI :
NISSENS :
APPLICATION :
FUSO BUS

MI-0171

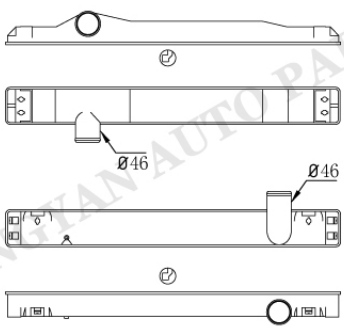

MI-0172

Tank size :(R9×4.5×4.5×70×631)
OEM :
DPI :
NISSENS :
APPLICATION :
FUSO BUS

MI-0173

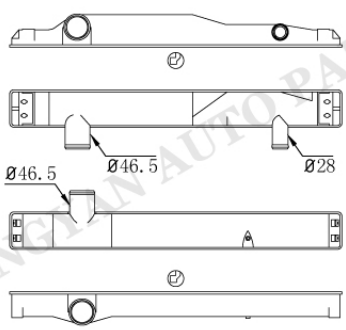

MI-0174

Tank size :(R9×4.5×4.5×70×623)
OEM :
DPI :
NISSENS :
APPLICATION :
FUSO BUS

MI-0175

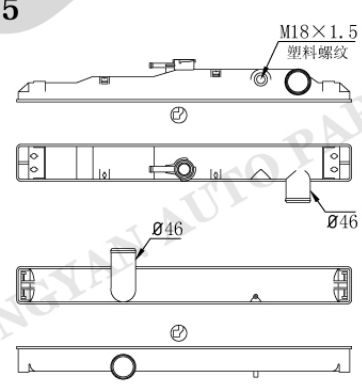

MI-0176

Tank size :(R9×4.5×4.5×70×631)
OEM :
DPI :
NISSENS :
APPLICATION :
FUSO BUS

HONGYAN AUTO PARTS

MI-0177

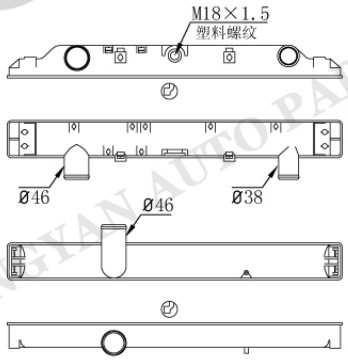

MI-0176

Tank size :(R9×4.5×4.5×70×631)
OEM :
DPI :
NISSENS :
APPLICATION :
FUSO BUS

MI-0178

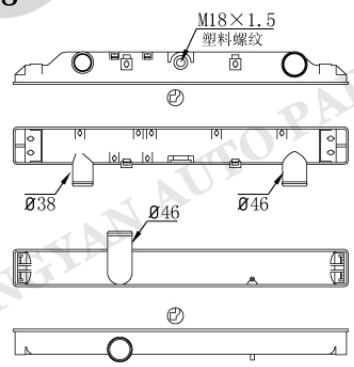

MI-0176

Tank size :(R9×4.5×4.5×70×631)
OEM :
DPI :
NISSENS :
APPLICATION :
FUSO BUS

MI-0179

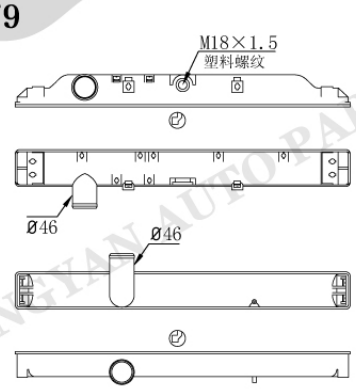

MI-0176

Tank size :(R9×4.5×4.5×70×631)
OEM :
DPI :
NISSENS :
APPLICATION :
FUSO BUS

MI-0180

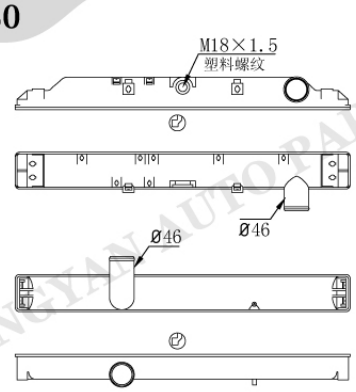

MI-0176

Tank size :(R9×4.5×4.5×70×631)
OEM :
DPI :
NISSENS :
APPLICATION :
FUSO BUS

HONGYAN AUTO PARTS

MITSUBISHI

MI-0181

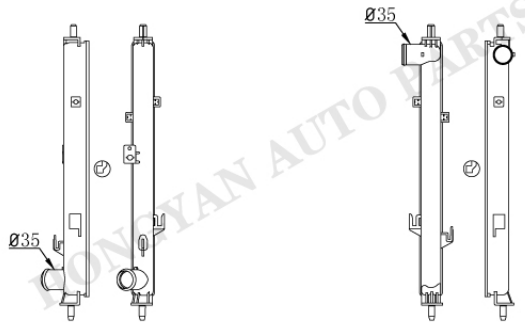

MI-0182

Tank size :(R9×4.5×4.5×40×480)
OEM :
DPI :
NISSENS :
APPLICATION :
MITSUBISHI LANCER

MI-0183

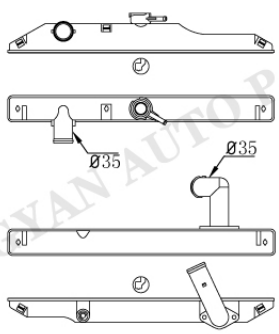

MI-0184

Tank size :(R9×4.5×4.5×49×500)
OEM :
DPI :
NISSENS :
APPLICATION :
DELICA

MI-0185

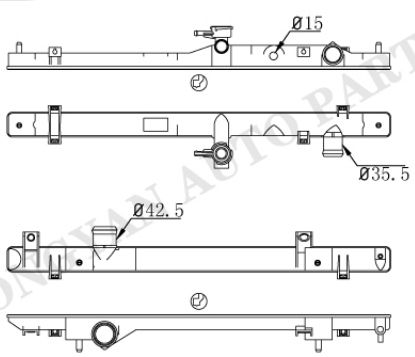

MI-0186

Tank size :(R9×4×5×48×716.4)
OEM :
DPI :
NISSENS :
APPLICATION :
MITSUBISHI LANCER

MI-0187

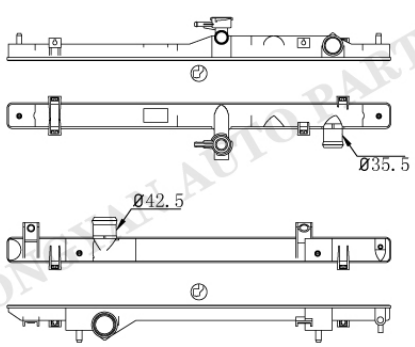

MI-0186

Tank size :(R9×4×5×48×716.4)
OEM :
DPI :
NISSENS :
APPLICATION :
MITSUBISHI LANCER

HONGYAN AUTO PARTS

MI-0188

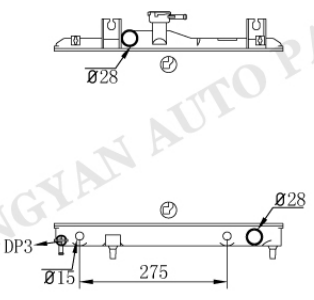

MI-0189AT/MT

Tank size :(R9×4.1×4.3×48.5×428.6)
OEM :
DPI :
NISSENS :
APPLICATION :

MI-0190

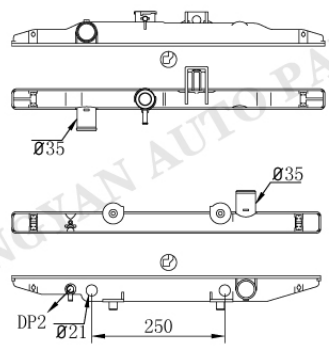

MI-0191AT/MT

Tank size :(R9.5×5×5×39×588.5)
OEM :
DPI :
NISSENS :
APPLICATION :
MITSUBISHI DELICA

MI-0192

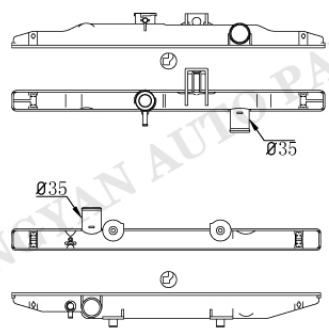

MI-0193

Tank size :(R9.5×5×5×39×588.5)
OEM :
DPI :
NISSENS :
APPLICATION :
MITSUBISHI DELICA

MI-0194

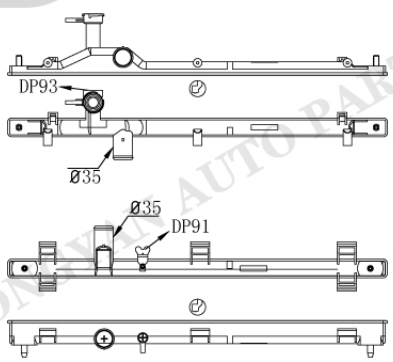

MI-0195

Tank size :(R8×4.7×4.5×35.3×712.6)
OEM :
DPI :13470
NISSENS :
APPLICATION :
14-15 MITSUBISHI OUTLANDER 2.4/3.0L

HONGYAN AUTO PARTS

MITSUBISHI

MI-0196

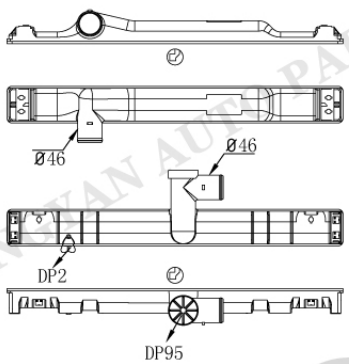

MI-0197

Tank size :(R9.5×4.7×4.5×69×631)
OEM :
DPI :
NISSENS :
APPLICATION :

MI-0198

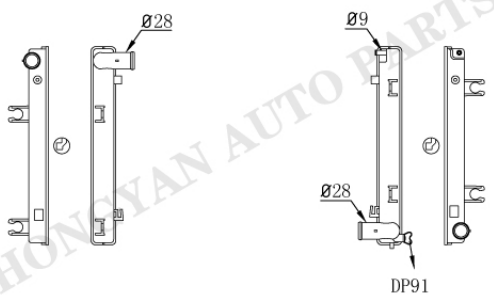

MI-0199

Tank size :(R8.5×5×4×46.5×372)
OEM :MR314705 MR481467
DPI :
NISSENS :
APPLICATION :
MITSUBISHI MINICAB

MI-0200



MI-0201

Tank size :(R8.5×5×4×52×263)
OEM :
DPI :
NISSENS :
APPLICATION :
98- MITSUBISHI VARICA

MI-0202

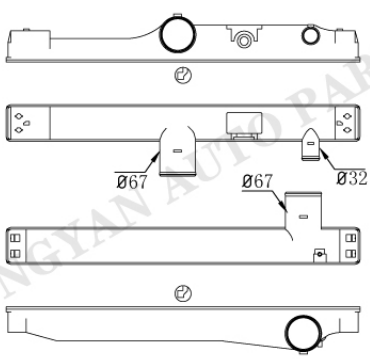

MI-0203

Tank size :(R9×4.5×4.5×69×665)
OEM :
DPI :
NISSENS :
APPLICATION :
FUSO BUS

HONGYAN AUTO PARTS

MI-35

MITSUBISHI

MI-0204

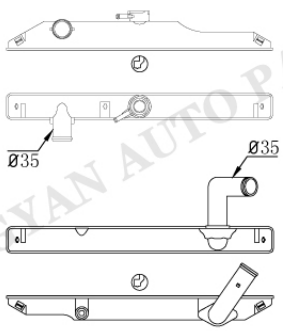

MI-0184

Tank size :(R9×4.5×4.5×49×500)
OEM :
DPI :
NISSENS :
APPLICATION :
MITSUBISHI DELICA

MI-0205

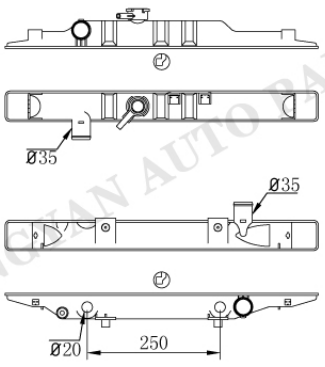

MI-0206AT/MT

Tank size :(R8.5×5×4×57×588)
OEM :
DPI :
NISSENS :
APPLICATION :
00- MITSUBISHI DELICA

MI-0205

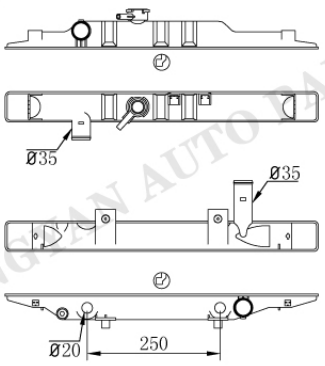

MI-0207AT/MT

Tank size : (R8.5×5×4×57×588)
OEM :
DPI :
NISSENS :
APPLICATION :
00- MITSUBISHI DELICA

MI-0205

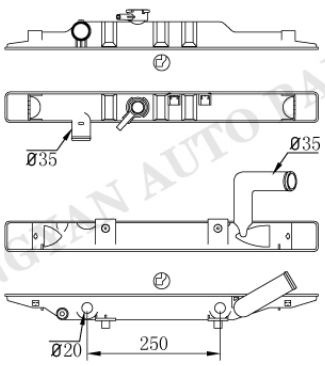

MI-0208AT/MT

Tank size :(R8.5×5×4×57×588)
OEM :
DPI :
NISSENS :
APPLICATION :
00- MITSUBISHI DELICA

HONGYAN AUTO PARTS

MITSUBISHI

MI-0209

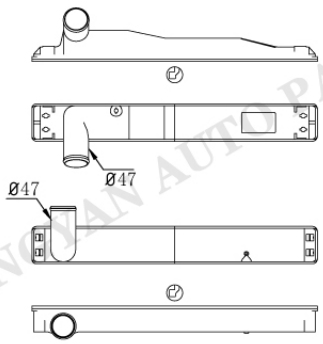

MI-0210

Tank size :(R9×4.5×4.5×70×537)
OEM :
DPI :
NISSENS :
APPLICATION :
98- FUSO

MI-0211

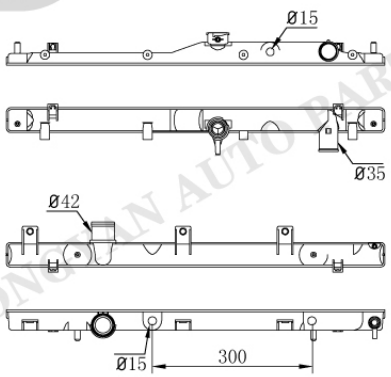

MI-0126AT/MT

Tank size :(R8.5×5×4×46.6×712)
OEM :
DPI :
NISSENS :
APPLICATION :
10- MITSUBISHI LANCER

MI-0212

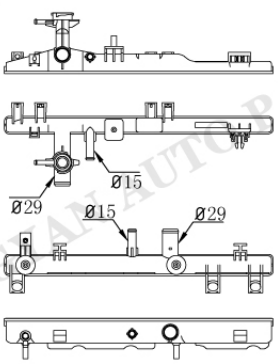

MI-0213

Tank size :(R8.5×4×4.5×33/40×505)
OEM :1350A541 1350A670
DPI :13469
NISSENS :
APPLICATION :
14-17 MITSUBISHI MIRAGE 1.2L

MI-0214

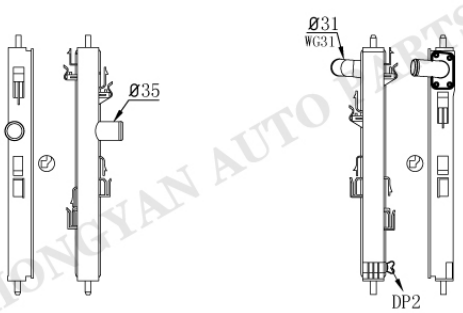

MI-0215

Tank size :(R8.5×5×4×46.5×431)
OEM :1611245980
DPI :
NISSENS :636033
APPLICATION :
12- CITROEN C4 AIRXORSS 2.0L

MI-37

HONGYAN AUTO PARTS

MITSUBISHI

MI-0216

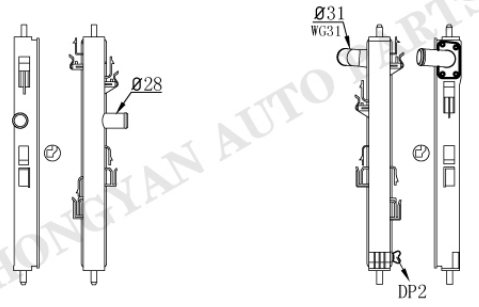

MI-0215

Tank size :(R8.5×5×4×46.5×431)
OEM :1611262880
DPI :
NISSENS :636034
APPLICATION :
12- CITROEN C4 AIRXORSS 1.6HDL

MI-0217

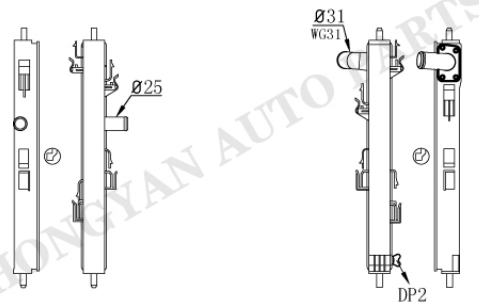

MI-0215

Tank size : (R8.5×5×4×46.5×431)
OEM :1611262980
DPI :
NISSENS :636032
APPLICATION :
12- CITROEN C4 AIRXORSS 1.6L

MI-0218

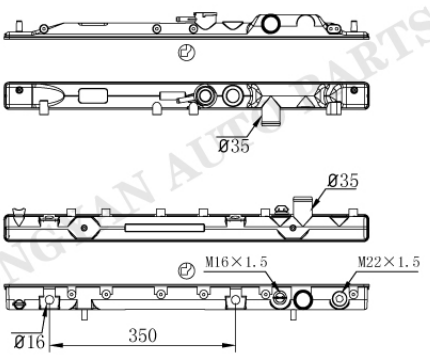

MI-0219AT/MT

Tank size : (R9.5×5×5×50×686)
OEM :
DPI :233
NISSENS :
APPLICATION :
87-92 MITSUBISHI GALANT 2.0L

MI-0220

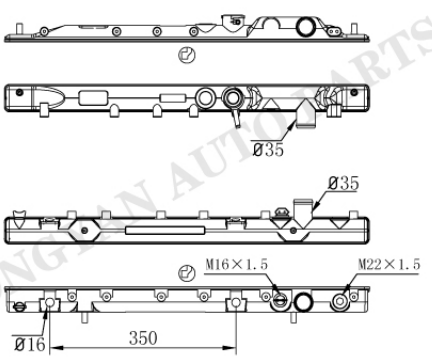

MI-0219AT/MT

Tank size :(R9.5×5×5×50×686)
OEM :
DPI :234
NISSENS :
APPLICATION :
88-92 MITSUBISHI MIRAGE

HONGYAN AUTO PARTS

MITSUBISHI

MI-0221

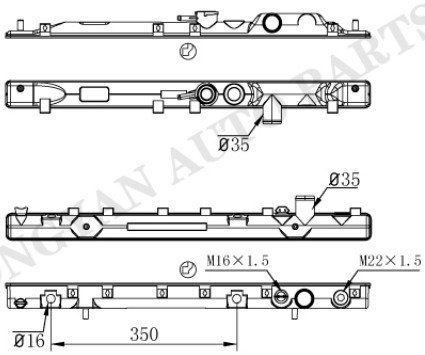

MI-0222AT/MT

Tank size :(R9.5×5×5×50×686)
OEM :
DPI :233
NISSENS :
APPLICATION :
87-92 MITSUBISHI GALANT 2.0L

MI-0223

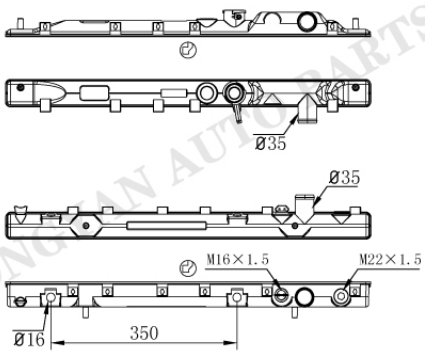

MI-0222AT/MT

Tank size :(R9.5×5×5×50×686)
OEM :
DPI :234
NISSENS :
APPLICATION :
88-92 MITSUBISHI MIRAGE

MI-0224

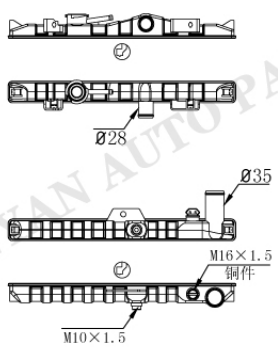

MI-0225

Tank size :(R8.5×4×4.5×40×428)
OEM :
DPI :
NISSENS :
APPLICATION :
84-98 MITSUBISHI PROTON SAGA

MI-0226

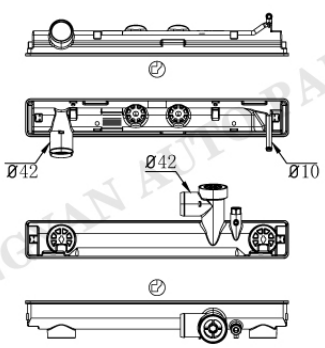

MI-0227

Tank size :(R9×4.5×5×69×493.5)
OEM :
DPI :
NISSENS :
APPLICATION :
14- FUSO 3.5L

HONGYAN AUTO PARTS

MITSUBISHI

MI-0228

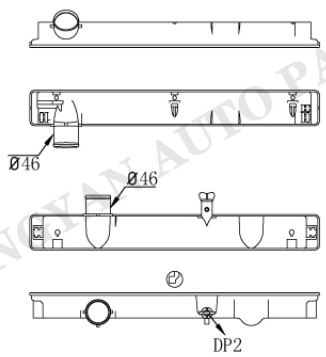

MI-0229

Tank size :(R9×4×5×66.5×544)
OEM :
DPI :
NISSENS :
APPLICATION :
FUSO CANTER

MI-0228

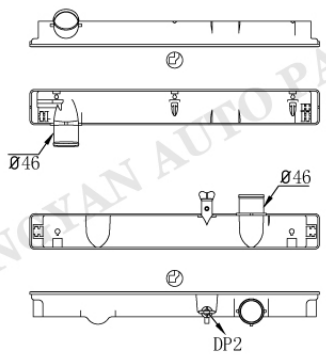

MI-0230

Tank size :(R9×4×5×66.5×544)
OEM :
DPI :
NISSENS :
APPLICATION :
FUSO CANTER

MI-0228

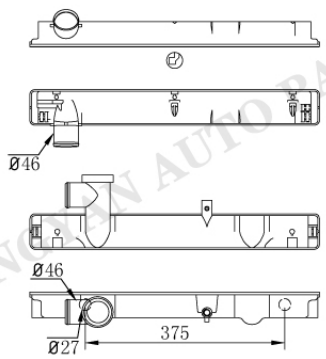

MI-0231AT/MT

Tank size :(R9×4×5×66.5×544)
OEM :
DPI :
NISSENS :
APPLICATION :
FUSO CANTER

MI-0232

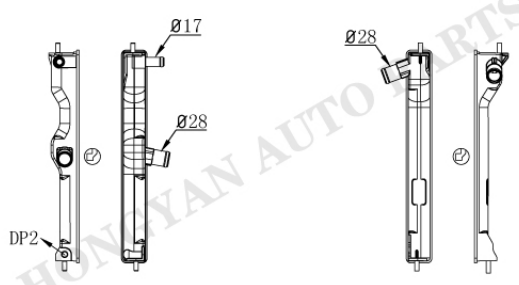

MI-0233

Tank size :(R9×4×4.5×48×400)
OEM :1350A014 1350A414
DPI :
NISSENS :
APPLICATION :
08- MITSUBISHI I

MITSUBISHI

MI-0234

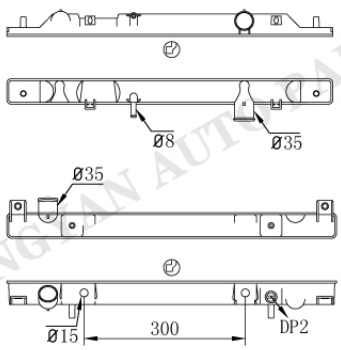

MI-0009AT/MT

Tank size :(R7.5×4.5×4.5×47.5×612.5)
OEM :
DPI :
NISSENS :
APPLICATION :

MI-0235

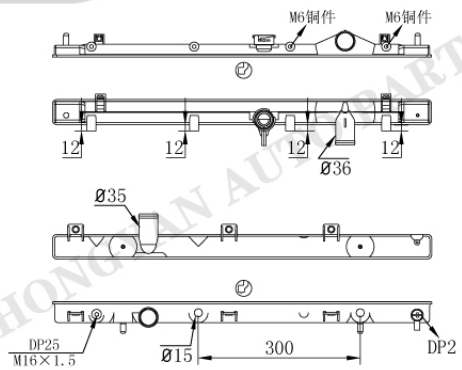

MI-0076AT/MT

Tank size :(R9×4×4.5×47×713)
OEM :
DPI :
NISSENS :
APPLICATION :
01- MITSUBISHI LANCER

MI-0236

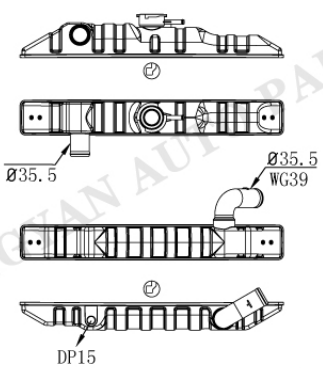

MI-0237

Tank size :(R9.5×5×5×65×495.5)
OEM :MB356153
DPI :
NISSENS :
APPLICATION :
MITSUBISHI L300

MI-0238



MI-0239

Tank size :(R8.5×5×5×70×262.5)
OEM :
DPI :
NISSENS :
APPLICATION :
99- MITSUBISHI VARICA

MI-41

HONGYAN AUTO PARTS

MITSUBISHI

MI-0240

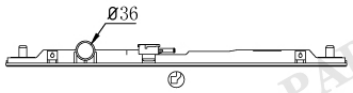

Tank size :(53.9×640.7)
OEM :
DPI :
NISSENS :
APPLICATION :
93-98 2.8/V46W/4M40

MI-0242



MI-0243AT/MT

Tank size :(R9.5×4.5×4.5×47.5×536)
OEM :
DPI :
NISSENS :
APPLICATION :
MITSUBISHI DX7

MI-0244AT/MT



MI-0245

Tank size :(R8.5×4.8×5.0×45×554)
OEM :
DPI :
NISSENS :
APPLICATION :

MI-0244-1AT



MI-0245

Tank size :(R8.5×4.8×5.0×45×554)
OEM :
DPI :
NISSENS :
APPLICATION :

HONGYAN AUTO PARTS

MITSUBISHI

MI-0246

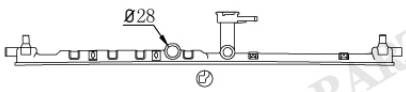

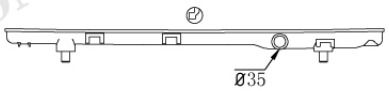

MI-0247

Tank size :(R6×4.5×5×31×713)
OEM :
DPI :
NISSENS :
APPLICATION :

MI-0030

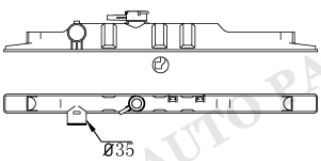

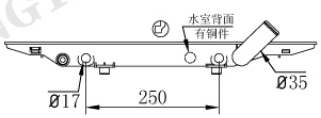

MI-0248AT/MT

Tank size :(R8×5×4×46.8×586.6)
OEM :
DPI :
NISSENS :
APPLICATION :
87-93 DELICA

MI-0249

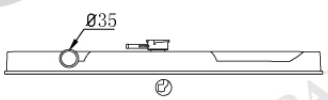

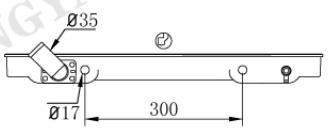

MI-0250AT/MT

Tank size :(R9×5×5×62×599)
OEM :
DPI :2071
NISSENS :
APPLICATION :
95-96 MITSUBISHI MONTERO 3.0L

MI-0249

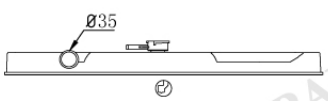



MI-0251

Tank size :(R9×5×5×62×599)
OEM :
DPI :
NISSENS :
APPLICATION :
95-96 MITSUBISHI MONTERO 3.0L

HONGYAN AUTO PARTS

MITSUBISHI

MI-0252

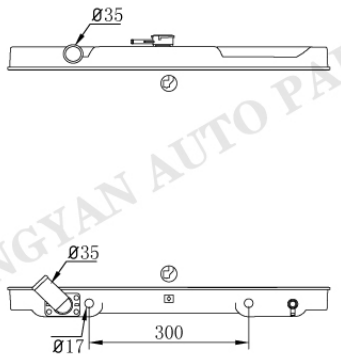

MI-0253AT/MT

Tank size : (R9×5×5×59×606)
OEM :
DPI :2071
NISSENS :
APPLICATION :
95-96 MITSUBISHI MONTERO 3.0L

MI-0252

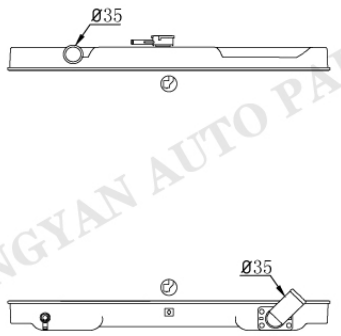

MI-0254

Tank size : (R9×5×5×59×606)
OEM :
DPI :
NISSENS :
APPLICATION :
95-96 MITSUBISHI MONTERO 3.0L

MI-0255

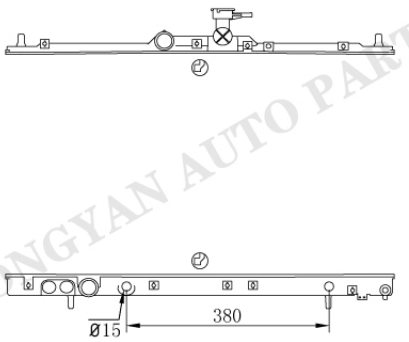

MI-0256AT/MT

Tank size :(R9.5×4.5×4.5×47.5×731)
OEM :
DPI :
NISSENS :
APPLICATION :

MI-0257

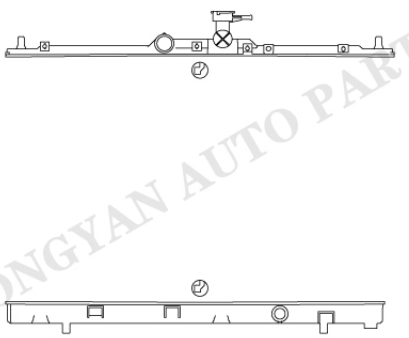

MI-0258

Tank size :(R9.5×4.5×4.5×47.5×731)
OEM :
DPI :
NISSENS :
APPLICATION :

HONGYAN AUTO PARTS

MITSUBISHI

MI-0259

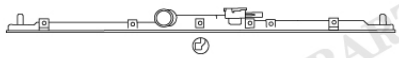

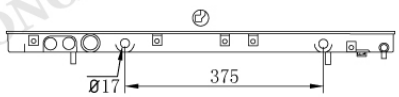

MI-0260AT/MT

Tank size :(R8.5×4×4.5×48×731)
OEM :
DPI :
NISSENS :
APPLICATION :

MI-0065

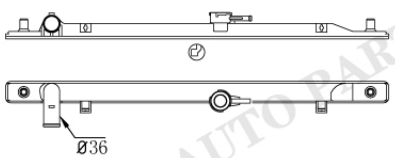

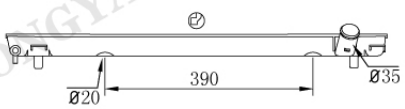

MI-0261AT/MT

Tank size :(R9×4×5×40/48×717)
OEM :
DPI :
NISSENS :
APPLICATION :
01-06 MITSUBISHI MONTERO 3.5/3.8L

MI-0262

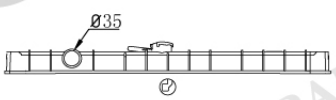



MI-0263

Tank size :(R9×4.5×4.5×51×612.5)
OEM :
DPI :
NISSENS :
APPLICATION :

MI-0262

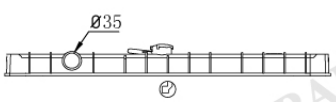

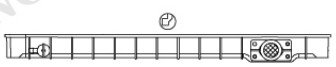

MI-0264

Tank size :(R9×4.5×4.5×51×612.5)
OEM :
DPI :
NISSENS :
APPLICATION :

HONGYAN AUTO PARTS

MITSUBISHI

MI-0265

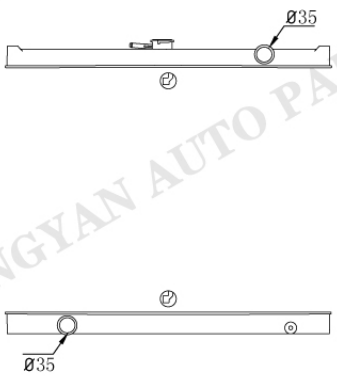

MI-0266

Tank size :(R9×4.5×4.5×51×612.5)
OEM :
DPI :
NISSENS :
APPLICATION :

MI-0267

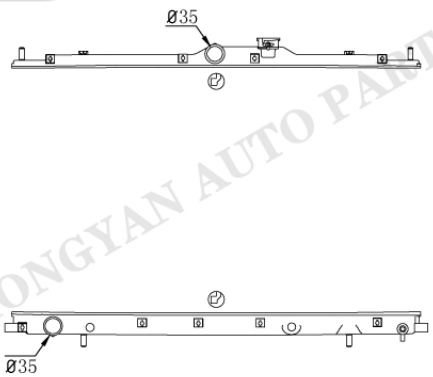

MI-0268

Tank size :(R9.5×4.5×4.5×47×768.5)
OEM :
DPI :2723
NISSENS :
APPLICATION :
04-12 MITSUBISHI GALANT 2.4/3.8

MI-0269

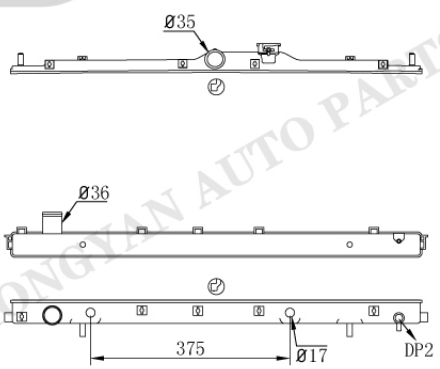

MI-0080AT/MT

Tank size :(R9×4×5×48×774)
OEM :
DPI :
NISSENS :
APPLICATION :

MI-0270



MI-0271

Tank size :(R9×4.5×5×39.5×449)
OEM :
DPI :
NISSENS :
APPLICATION :

HONGYAN AUTO PARTS

MITSUBISHI

MI-0272

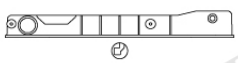

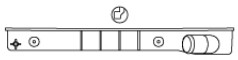

MI-0273

Tank size :(R9.5×4.5×4.9×54.5×430)
OEM :
DPI :
NISSENS :
APPLICATION :

MI-0274

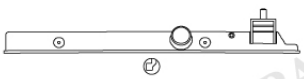

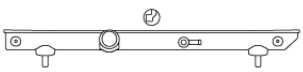

MI-0275

Tank size :(R9.5×4.8×4.5×54×556)
OEM :
DPI :
NISSENS :
APPLICATION :

MI-0276

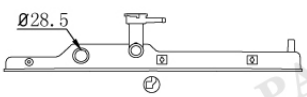

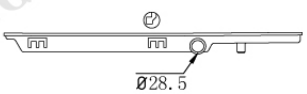

MI-0277

Tank size :(R6.3×4.2×5×43×561)
OEM :
DPI :
NISSENS :
APPLICATION :

MI-0278

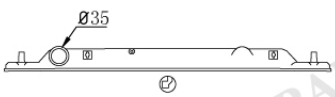



MI-0279

Tank size :(R5×4.4×5×31×615)
OEM :
DPI :
NISSENS :
APPLICATION :

HONGYAN AUTO PARTS

MI-47

MITSUBISHI

MI-0280



MI-0281

Tank size :(R9×4.5×5×39.5×449)
OEM :
DPI :
NISSENS :
APPLICATION :

MI-0030

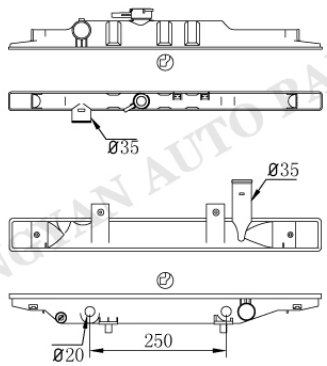

MI-0282AT/MT

Tank size :(R8×5×4×46.8×586.6)
OEM :
DPI :
NISSENS :
APPLICATION :
87-93 DELICA

MI-0259

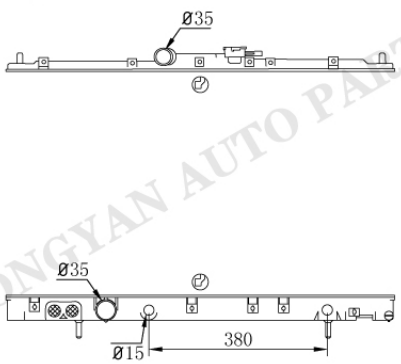

MI-0283AT/MT

Tank size :(R8.5×4×4.5×48×731)
OEM :
DPI :
NISSENS :
APPLICATION :

MI-0130

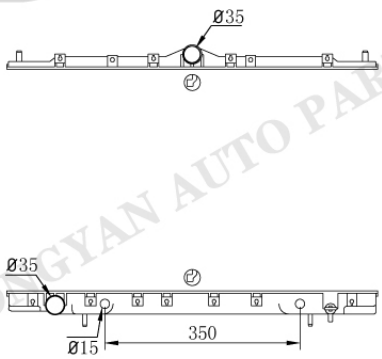

MI-0284AT/MT

Tank size :(R9×5×5×48×698)
OEM :
DPI :1892
NISSENS :
APPLICATION :
95-00 MITSUBISHI ECLIPSE 2.5L

HONGYAN AUTO PARTS

MITSUBISHI

MI-0099AT/MT

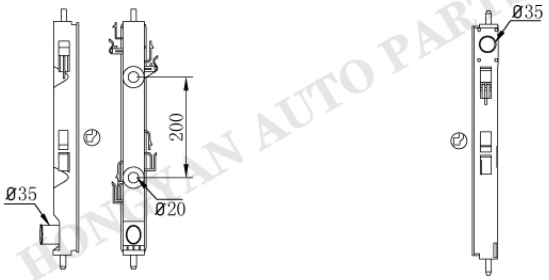

Tank size :(R8.5×5×4×46.5×431)
OEM :MN156092 1350A297
DPI :2979
NISSENS :628952
APPLICATION :
08-10 MITSUBISHI LANCER 2.0/2.4L

MI-0285

MI-0286

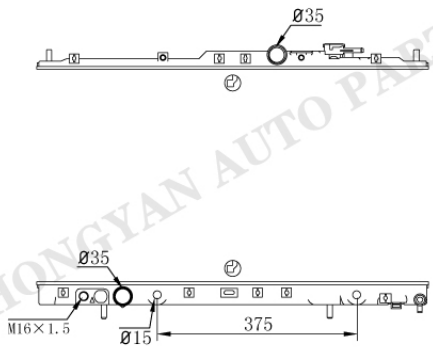

Tank size :(R9.5×4.5×5×48×736.5)
OEM :
DPI :2300 2406 2433 2438
NISSENS :
APPLICATION :
99-02 MITSUBISHI GALAN 2.4L
99- MITSUBISHI ECLIPSE 2.4L

MI-0287AT/MT

MI-0134

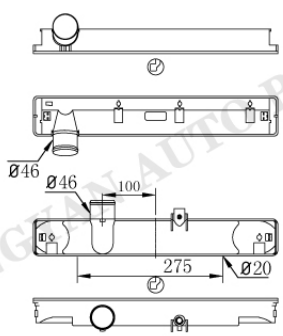

Tank size :(R8.5×5×4.5×70×460)
OEM :
DPI :
NISSENS :
APPLICATION :
02-05 FUSO CANTER

MI-0288AT/MT

MI-0289

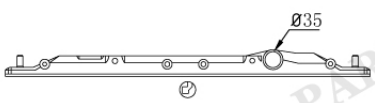

Tank size :(R9×4.5×5×40×686)
OEM :
DPI :
NISSENS :
APPLICATION :

HONGYAN AUTO PARTS

MITSUBISHI

MI-0291

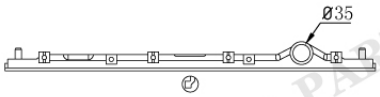

Tank size :(R8.5×4×5×33×696.5)
OEM :
DPI :
NISSENS :
APPLICATION :

MI-0293

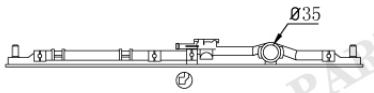

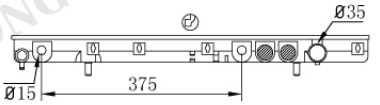

MI-0294AT/MT

Tank size :(R6.5×4.8×5×49.5×671.5)
OEM :
DPI :
NISSENS :
APPLICATION :

MI-0293

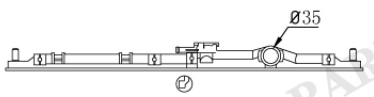

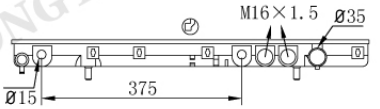

MI-0295AT/MT

Tank size :(R6.5×4.8×5×49.5×671.5)
OEM :
DPI :
NISSENS :
APPLICATION :

MI-0296

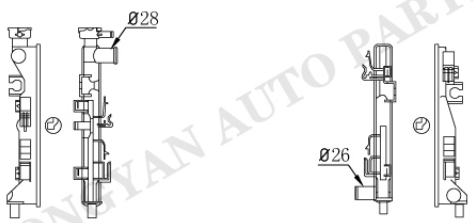

MI-0297

Tank size :(R8.5×4.5×5×36×305)
OEM :1770082M60
DPI :
NISSENS :
APPLICATION :

HONGYAN AUTO PARTS

MITSUBISHI

MI-0298

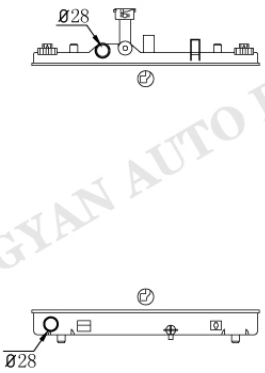

MI-0299

Tank size :(R9×4×5×33×428)
OEM :
DPI :
NISSENS :
APPLICATION :

MI-0300

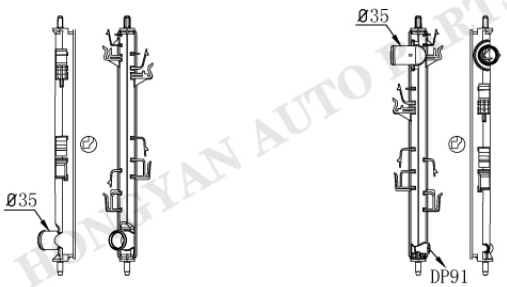

MI-0301

Tank size :(R8×5×4×35.5×430.8)
OEM :1350A694
DPI :13443
NISSENS :
APPLICATION :
14- MITSUBISHI OUTLANDER SPORT 2.0L

MI-0036

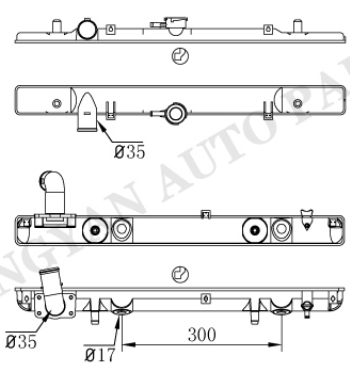

MI-0302AT/MT

Tank size :(R9.5×5×4.5×54.9×617.8)
OEM :
DPI :
NISSENS :
APPLICATION :

MI-0303

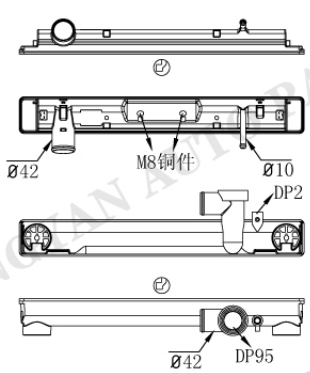

MI-0304

Tank size :(R9.5×4.5×4.5×69×536)
OEM :
DPI :
NISSENS :
APPLICATION :
13- FUSO

HONGYAN AUTO PARTS

MITSUBISHI

MI-0305

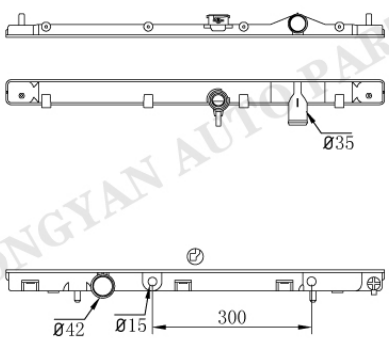

MI-0126AT/MT

Tank size :(R8.5×5×4×46.6×712)
OEM :
DPI :
NISSENS :
APPLICATION :
10- MITSUBISHI LANCER

MI-0306

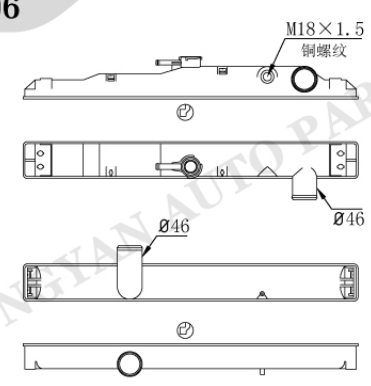

MI-0176

Tank size :(R9×4.5×4.5×70×631)
OEM :
DPI :
NISSENS :
APPLICATION :
FUSO BUS

MI-0307

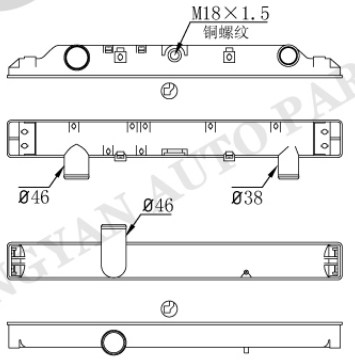

MI-0176

Tank size :(R9×4.5×4.5×70×631)
OEM :
DPI :
NISSENS :
APPLICATION :
FUSO BUS

MI-0308

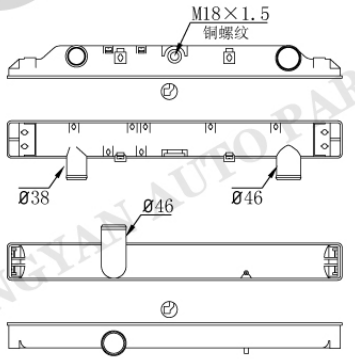

MI-0176

Tank size :(R9×4.5×4.5×70×631)
OEM :
DPI :
NISSENS :
APPLICATION :
FUSO BUS

HONGYAN AUTO PARTS

MITSUBISHI

MI-0309

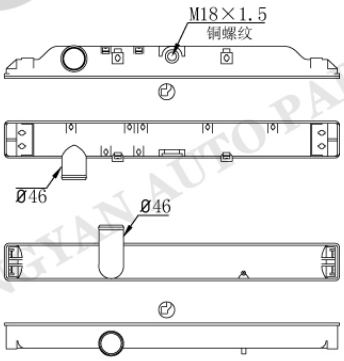

MI-0176

Tank size :(R9×4.5×4.5×70×631)
OEM :
DPI :
NISSENS :
APPLICATION :
FUSO BUS

MI-0310

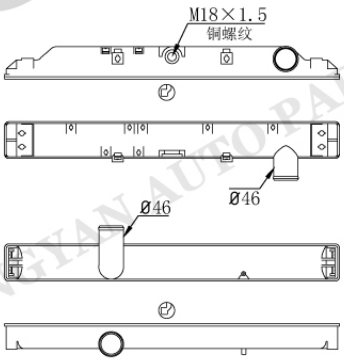

MI-0176

Tank size :(R9×4.5×4.5×70×631)
OEM :
DPI :
NISSENS :
APPLICATION :
FUSO BUS

Tank size :
OEM :
DPI :
NISSENS :
APPLICATION :

Tank size :
OEM :
DPI :
NISSENS :
APPLICATION :

HONGYAN AUTO PARTS

MI-53

	Tank size : OEM : DPI : NISSENS : APPLICATION :
	Tank size : OEM : DPI : NISSENS : APPLICATION :
	Tank size : OEM : DPI : NISSENS : APPLICATION :
	Tank size : OEM : DPI : NISSENS : APPLICATION :

HONGYAN AUTO PARTS

	Tank size : OEM : DPI : NISSENS : APPLICATION :
	Tank size : OEM : DPI : NISSENS : APPLICATION :
	Tank size : OEM : DPI : NISSENS : APPLICATION :
	Tank size : OEM : DPI : NISSENS : APPLICATION :

HONGYAN AUTO PARTS

	Tank size : OEM : DPI : NISSENS : APPLICATION :
	Tank size : OEM : DPI : NISSENS : APPLICATION :
	Tank size : OEM : DPI : NISSENS : APPLICATION :
	Tank size : OEM : DPI : NISSENS : APPLICATION :

HONGYAN AUTO PARTS

MORRIS GARAGES

MG-0001

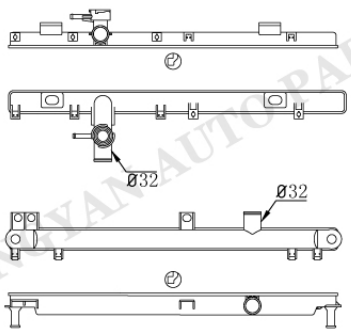

Tank size :(R9×5×5×42×618)
OEM :
DPI :
NISSENS :
APPLICATION :
MORRIS GARAGES 3

MG-0002

MG-0003

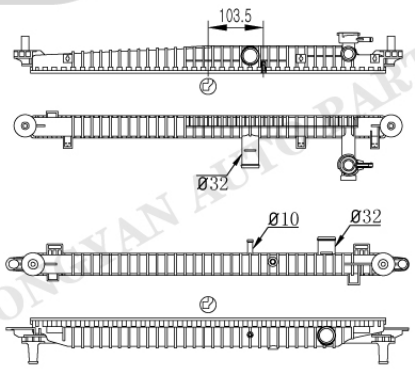

Tank size :(R5.5×4×5.5×42×667)
OEM :
DPI :
NISSENS :
APPLICATION :
15- MORRIS GARAGES RUITENG 1.5LT

MG-0004

MG-0003

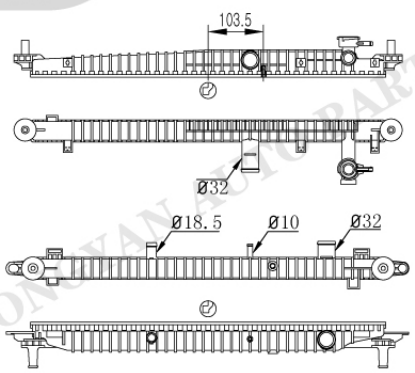

Tank size :(R5.5×4×5.5×42×667)
OEM :
DPI :
NISSENS :
APPLICATION :
15- MORRIS GARAGES RUITENG 2.0LT

MG-0005

Tank size :
OEM :
DPI :
NISSENS :
APPLICATION :

HONGYAN AUTO PARTS

MG-1

NISSAN/INFINITI

NI-0001

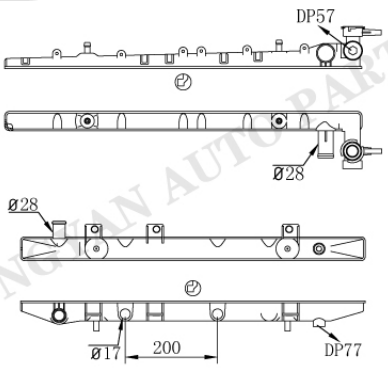

NI-0002AT/MT

Tank size :(R8×5×4×36/47×669)
OEM :2141057Y00/64Y00
DPI :1152 1440
NISSENS :
APPLICATION :
95-98 NISSAN 200SX 2.0L
96-00 NISSAN LUCINO 2.0L
91-93 NISSAN NX 1.6/2.0L
91-00 NISSAN SENTRA 1.6/L
99-04 NISSAN TSUBAME 1.6L

NI-0003

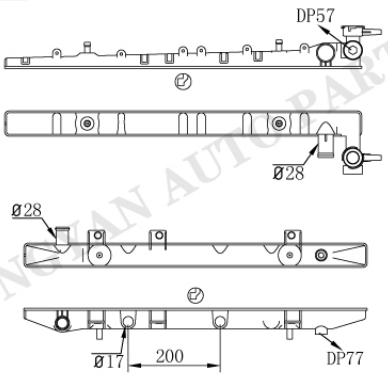

NI-0002AT/MT

Tank size :(R8×5×4×47×669)
OEM :2141064Y01/66Y00/66Y01
DPI :1317
NISSENS :
APPLICATION :
95-98 NISSAN 200SX 2.0L
96-00 NISSAN LUCINO 2.0L
91-93 NISSAN NX 1.6/2.0L
91-00 NISSAN SENTRA 1.6/1.8/2.0/L
99-04 NISSAN TSUBAME 1.6L
97-15 NISSAN TSURU 1.6L

NI-0001

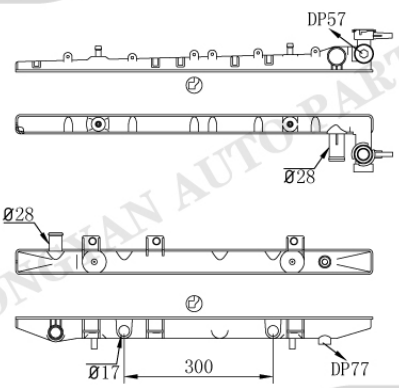

NI-0004AT

Tank size :(R8×5×4×36/47×669)
OEM :2141064Y01
DPI :1178
NISSENS :
APPLICATION :
91-00 NISSAN SENTRA 1.6/1.8/2.0/L
95-04 NISSAN TSUBAME 2.6L
96-15 NISSAN TSURU 1.6L

NI-0001

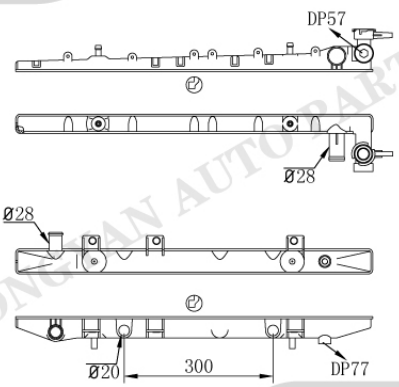

NI-0004-1AT

Tank size :(R8×5×4×36/47×669)
OEM :2141064Y01
DPI :1178
NISSENS :
APPLICATION :
91-00 NISSAN SENTRA 1.6/1.8/2.0/L
95-04 NISSAN TSUBAME 2.6L
96-15 NISSAN TSURU 1.6L

HONGYAN AUTO PARTS

NISSAN/INFINITI

NI-0003

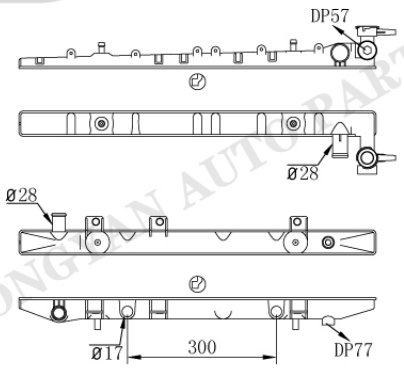

NI-0004AT

Tank size :(R8×5×4×47×669)
OEM :2146064Y02/65Y02/Q5600
DPI :1426
NISSENS :
APPLICATION :
95-98 NISSAN 200SX 2.0L
96-00 NISSAN LUCINO 2.0L
91-93 NISSAN NX 1.6/2.0L
91-00 NISSAN SENTRA 1.6/1.8/2.0/L
99-04 NISSAN TSUBAME 1.6L
97-15 NISSAN TSURU 1.6L

NI-0003

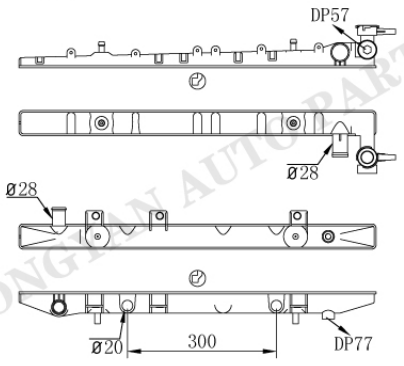

NI-0004-1AT

Tank size :(R8×5×4×47×669)
OEM :2146064Y02/65Y02/Q5600
DPI :1426
NISSENS :
APPLICATION :
95-98 NISSAN 200SX 2.0L
96-00 NISSAN LUCINO 2.0L
91-93 NISSAN NX 1.6/2.0L
91-00 NISSAN SENTRA 1.6/1.8/2.0/L
99-04 NISSAN TSUBAME 1.6L
97-15 NISSAN TSURU 1.6L

NI-0005

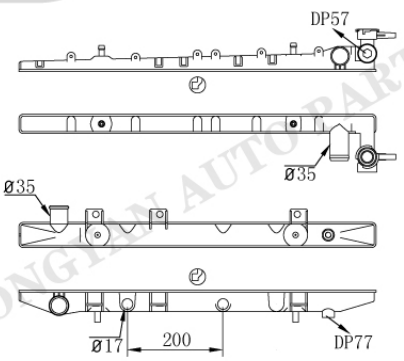

NI-0006AT/MT

Tank size :(R8×5×4×36/47×669)
OEM :2141053J00/62J00
DPI :1158
NISSENS :
APPLICATION :
91-96 INFINITI G20 2.0L

NI-0007

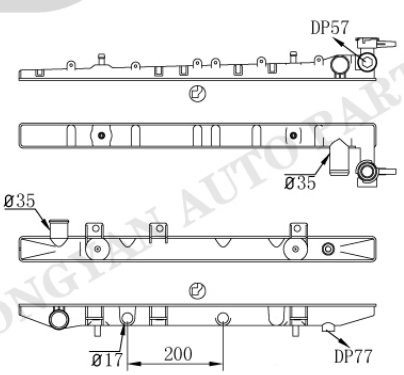

NI-0006AT/MT

Tank size :(R8×5×4×47×669)
OEM :2141059Y01
DPI :1405
NISSENS :
APPLICATION :

NI-2

NISSAN/INFINITI

NI-0005

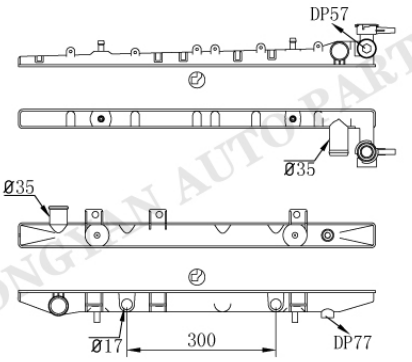

NI-0008AT

Tank size :(R8×5×4×36/47×669)
OEM :
DPI :1421 1978
NISSENS :
APPLICATION :
91-96 INFINITI G20 2.0L

NI-0005

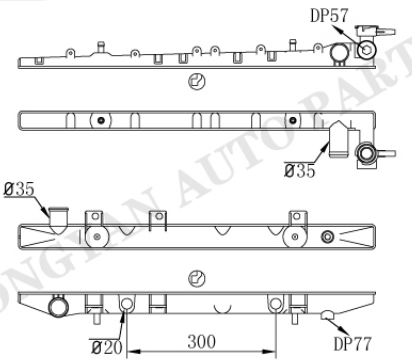

NI-0008-1AT

Tank size :(R8×5×4×36/47×669)
OEM :
DPI :1421 1978
NISSENS :
APPLICATION :
91-96 INFINITI G20 2.0L

NI-0007

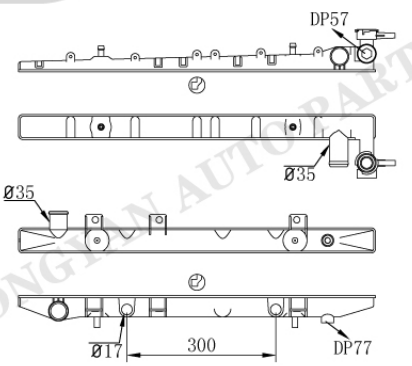

NI-0008AT

Tank size :(R8×5×4×47×669)
OEM :2146062J01
DPI :
NISSENS :
APPLICATION :

NI-0007

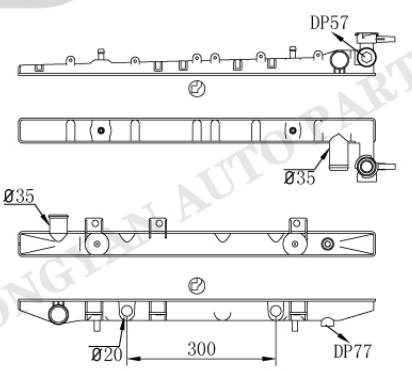

NI-0008-1AT

Tank size :(R8×5×4×47×669)
OEM :2146062J01
DPI :
NISSENS :
APPLICATION :

NISSAN/INFINITI

NI-0001

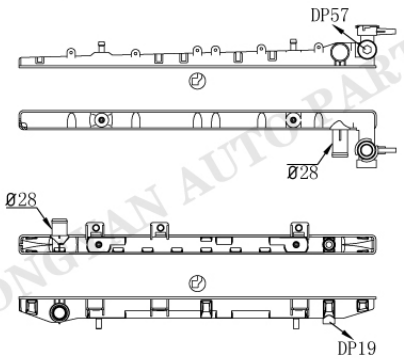

NI-0009

Tank size :(R8×5×4×36×669)
OEM :214100M204/404
DPI :
NISSENS :
APPLICATION :
94-98 NISSAN PULSAR

NI-0007

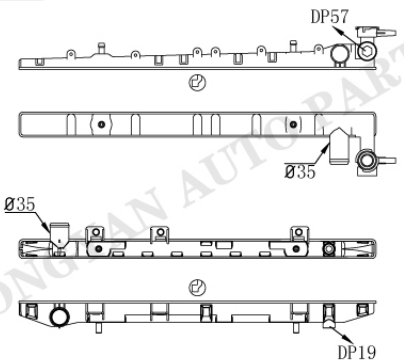

NI-0010

Tank size :(R8×5×4×36×669)
OEM :214100M200
DPI :
NISSENS :
APPLICATION :
94-98 NISSAN PULSAR
94-98 NISSAN SUNNY
94-98 NISSAN PRECEA

NI-0011

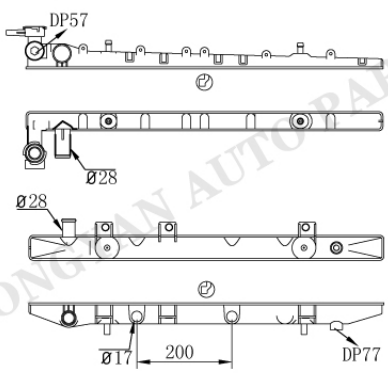

NI-0002AT/MT

Tank size :(R8×5×4×36/47×669)
OEM :
DPI :
NISSENS :
APPLICATION :

NI-0011

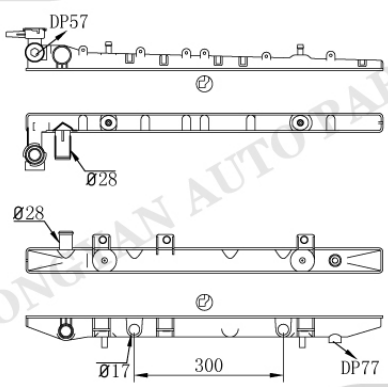

NI-0004AT

Tank size :(R8×5×4×36/47×669)
OEM :
DPI :
NISSENS :
APPLICATION :

HONGYAN AUTO PARTS

NI-4

NISSAN/INFINITI

NI-0011

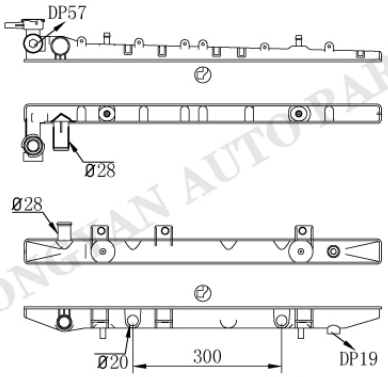

NI-0004-1AT

Tank size :(R8×5×4×36/47×669)
OEM :
DPI :
NISSENS :
APPLICATION :

NI-0012

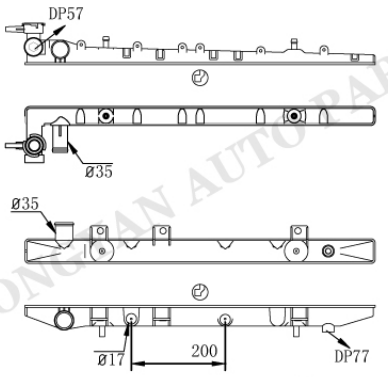

NI-0006AT/MT

Tank size :(R8×5×4×36/47×669)
OEM :
DPI :
NISSENS :
APPLICATION :

NI-0012

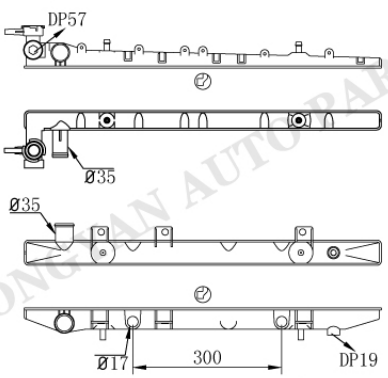

NI-0008AT/MT

Tank size :(R8×5×4×36/47×669)
OEM :
DPI :
NISSENS :
APPLICATION :

NI-0012

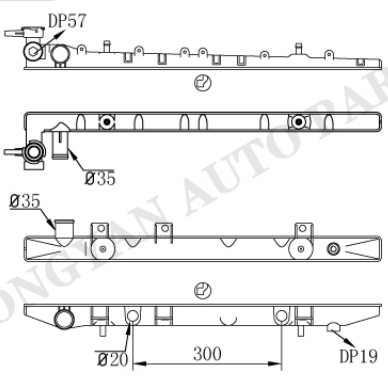

NI-0008-1AT

Tank size :(R8×5×4×36/47×669)
OEM :
DPI :
NISSENS :
APPLICATION :

HONGYAN AUTO PARTS

NISSAN/INFINITI

NI-0013

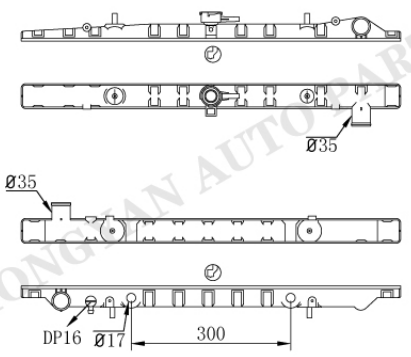

NI-0014AT/MT

Tank size :(R8.5×5×5×47×713)
OEM :2146055E01/58E00
DPI :48 1186 1242
NISSENS :
APPLICATION :
91-94 NISSAN AXXESS 2.4L
90-92 NISSAN STANZA 2.4L

NI-0013

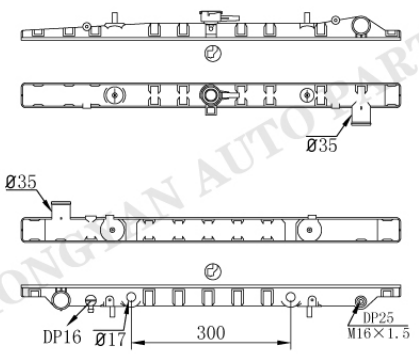

NI-0015AT/MT

Tank size :(R8.5×5×5×47×713)
OEM :
DPI :
NISSENS :
APPLICATION :
91-94 NISSAN AXXESS 2.4L
90-92 NISSAN STANZA 2.4L

NI-0013

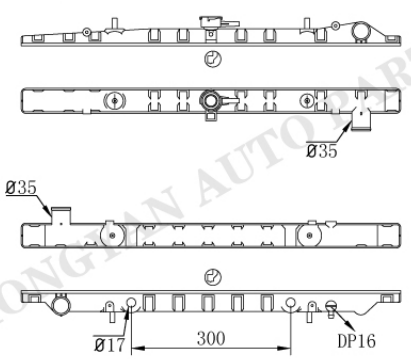

NI-0016AT/MT

Tank size :(R8.5×5×5×47×713)
OEM :
DPI :1150
NISSENS :
APPLICATION :
90-96 NISSAN 300ZX

NI-0017

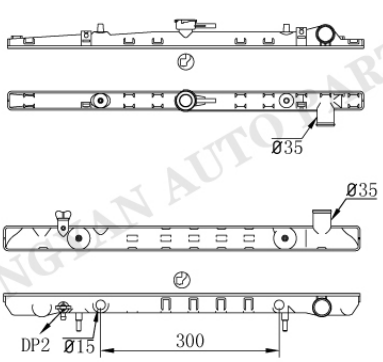

NI-0018AT/MT

Tank size :(R8×5×5×36/47×669)
OEM :2146010V01
DPI :
NISSENS :
APPLICATION :

NI-6

HONGYAN AUTO PARTS

NISSAN/INFINITI

NI-0019

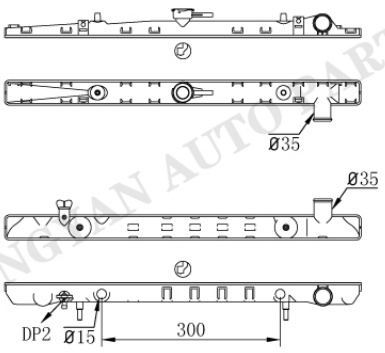

NI-0018AT/MT

Tank size :(R8×5×5×47×669)
OEM :
DPI :
NISSENS :
APPLICATION :

NI-0017

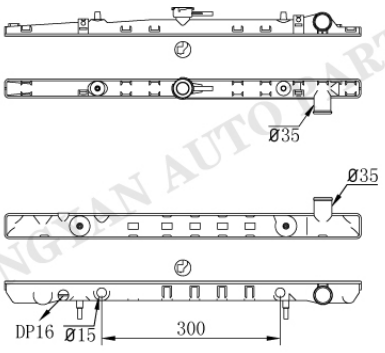

NI-0020AT/MT

Tank size :(R8×5×5×36/47×669)
OEM :
DPI :
NISSENS :
APPLICATION :

NI-0017

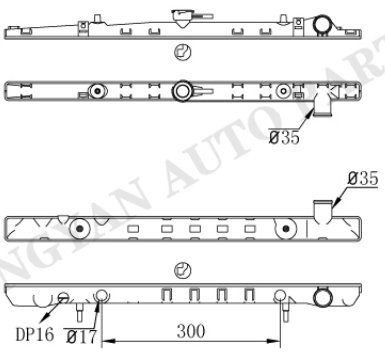

NI-0020-1AT

Tank size :(R8×5×5×36/47×669)
OEM :
DPI :
NISSENS :
APPLICATION :

NI-0019

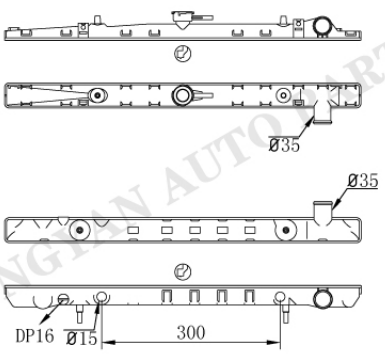

NI-0020AT/MT

Tank size :(R8×5×5×47×669)
OEM :
DPI :
NISSENS :
APPLICATION :

HONGYAN AUTO PARTS

NISSAN/INFINITI

NI-0019

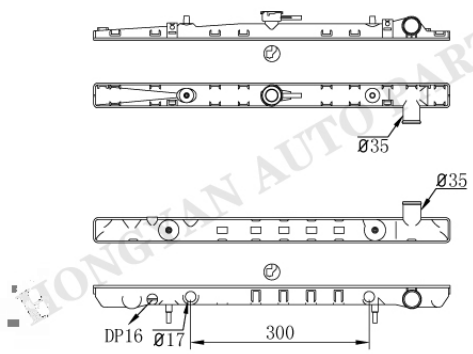

NI-0020-1AT

Tank size :(R8×5×5×47×669)
OEM :
DPI :
NISSENS :
APPLICATION :

NI-0017

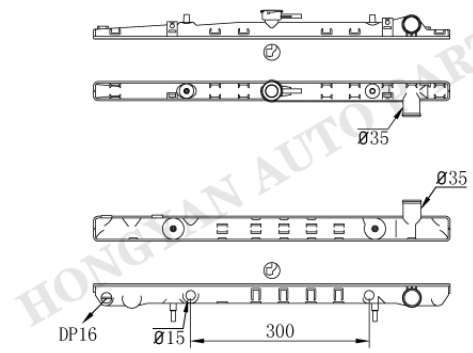

NI-0021AT/MT

Tank size :(R8×5×5×36/47×669)
OEM :
DPI :46
NISSENS :
APPLICATION :
89-94 NISSAN 240SX 2.4L

NI-0019

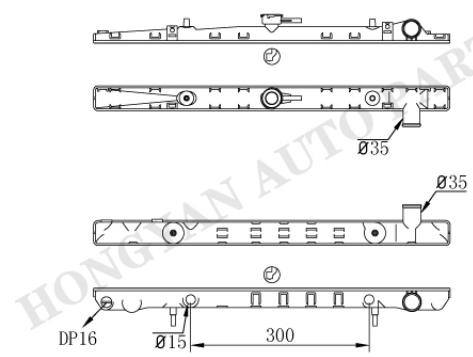

NI-0021AT/MT

Tank size :(R8×5×5×47×669)
OEM :
DPI :1241
NISSENS :
APPLICATION :
89-94 NISSAN 240SX 2.4L

NI-0017

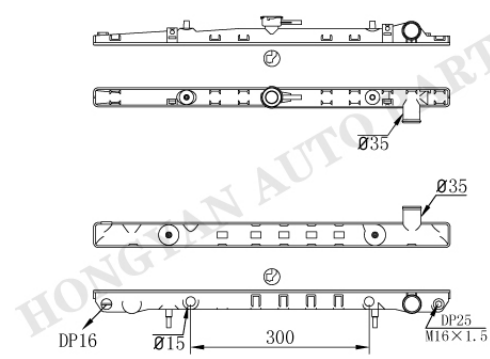

NI-0022AT/MT

Tank size :(R8×5×5×36/47×669)
OEM :
DPI :
NISSENS :
APPLICATION :

HONGYAN AUTO PARTS

NISSAN/INFINITI

NI-0017

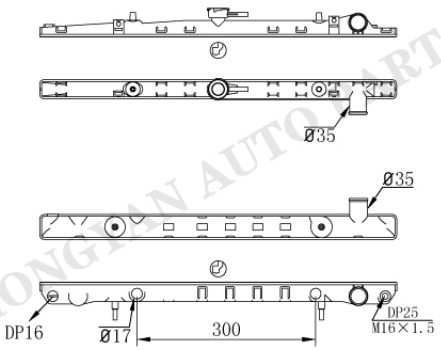

NI-0022-1AT

Tank size :(R8×5×5×36/47×669)
OEM :
DPI :
NISSENS :
APPLICATION :

NI-0019

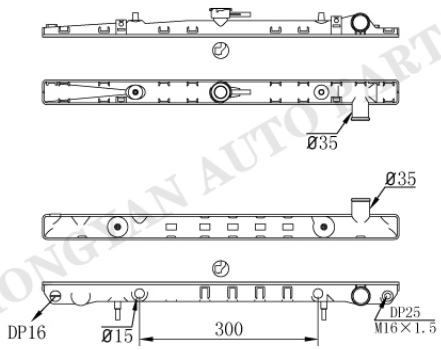

NI-0022AT/MT

Tank size :(R8×5×5×47×669)
OEM :
DPI :
NISSENS :
APPLICATION :

NI-0019

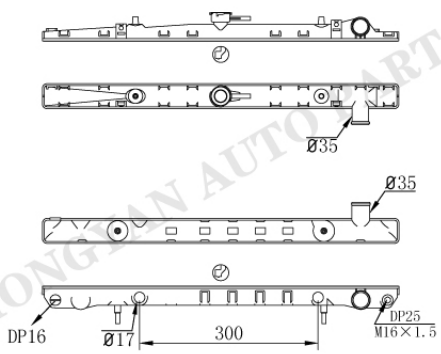

NI-0022-1AT

Tank size :(R8×5×5×47×669)
OEM :
DPI :
NISSENS :
APPLICATION :

NI-0019

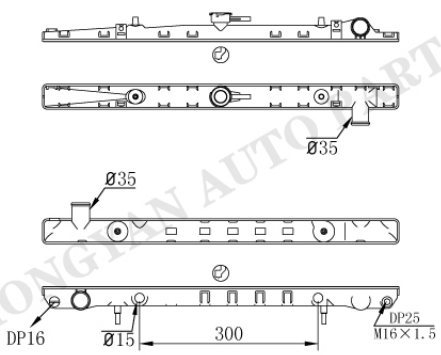

NI-0023AT/MT

Tank size :(R8×5×5×47×669)
OEM :
DPI :
NISSENS :
APPLICATION :

NISSAN/INFINITI

NI-0017

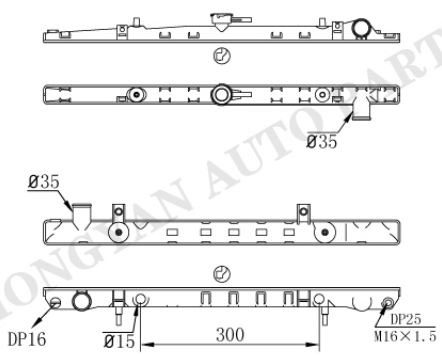

NI-0024AT/MT

Tank size :(R8×5×5×36/47×669)
OEM :
DPI :
NISSENS :
APPLICATION :

NI-0017

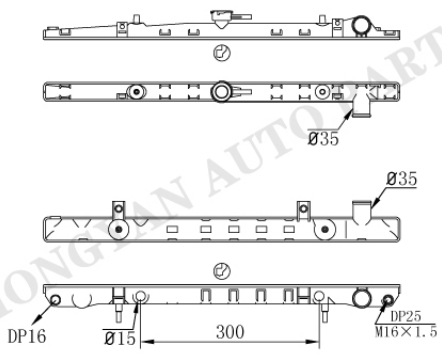

NI-0025AT/MT

Tank size :(R8×5×5×36/47×669)
OEM :
DPI :
NISSENS :
APPLICATION :

NI-0017

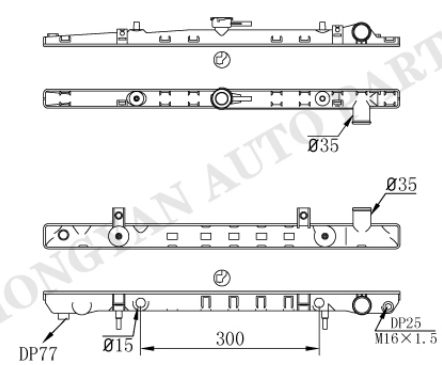

NI-0026AT/MT

Tank size :(R8×5×5×36/47×669)
OEM :
DPI :1276 1441
NISSENS :
APPLICATION :
91-94 NISSAN 240SC 2.4L

NI-0019

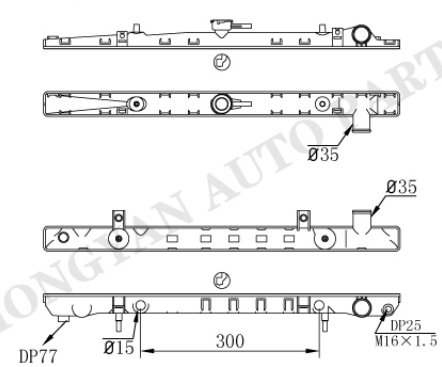

NI-0026AT/MT

Tank size :(R8×5×5×47×669)
OEM :
DPI :1425
NISSENS :
APPLICATION :
89-90 NISSAN 240SC 2.4L

NI-10

NISSAN/INFINITI

NI-0027

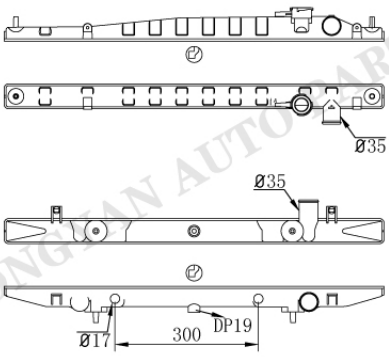

NI-0028AT/MT

Tank size :(R8.5×5×4.5×47×713)
OEM :21412S400/3S400/100
DPI :2151 2215
NISSENS :
APPLICATION :
98-15 NISSAN FRONTIER 2.4/3.3L
00-04 NISSAN XTERRA 1.4/3.3L

NI-0027

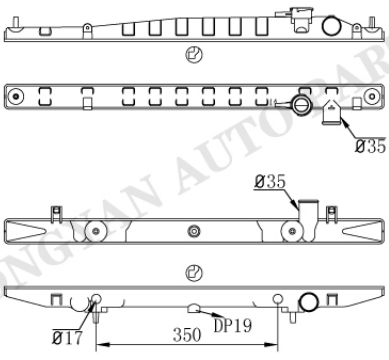

NI-0028-1AT

Tank size :(R8.5×5×4.5×47×713)
OEM :21412S400/3S400/100
DPI :2151 2215
NISSENS :
APPLICATION :
98-15 NISSAN FRONTIER 2.4/3.3L
00-04 NISSAN XTERRA 1.4/3.3L

NI-0027

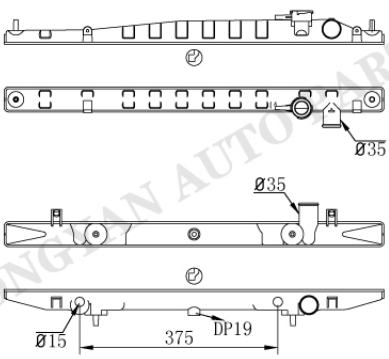

NI-0028-2AT

Tank size :(R8.5×5×4.5×47×713)
OEM :21412S400/3S400/100
DPI :2151 2215
NISSENS :
APPLICATION :
98-15 NISSAN FRONTIER 2.4/3.3L
00-04 NISSAN XTERRA 1.4/3.3L

NI-0027

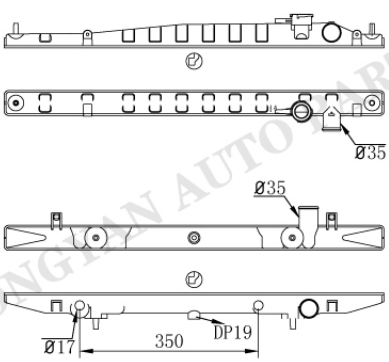

NI-0028-3AT

Tank size :(R8.5×5×4.5×47×713)
OEM :21412S400/3S400/100
DPI :2151 2215
NISSENS :
APPLICATION :
98-15 NISSAN FRONTIER 2.4/3.3L
00-04 NISSAN XTERRA 1.4/3.3L

HONGYAN AUTO PARTS

NISSAN/INFINITI

NI-0027

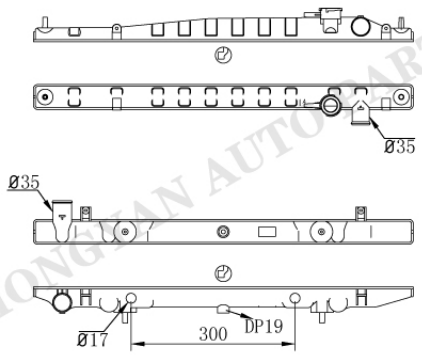

NI-0029AT/MT

Tank size :(R8.5×5×4.5×47×713)
OEM :
DPI :
NISSENS :
APPLICATION :

NI-0027

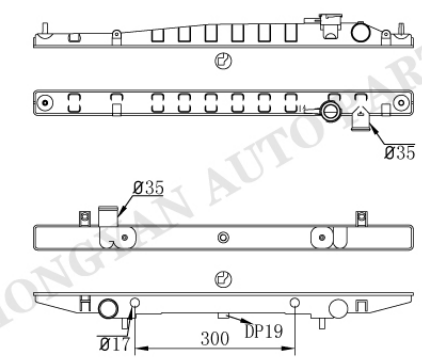

NI-0030AT/MT

Tank size :(R8.5×5×4.5×47×713)
OEM :214103S110/210
DPI :
NISSENS :
APPLICATION :

NI-0027

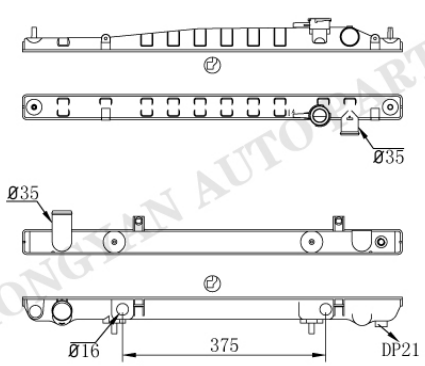

NI-0031AT/MT

Tank size :(R8.5×5×4.5×47×713)
OEM :21460AG910/17
DPI :2459 2054
NISSENS :
APPLICATION :
01-03 INFINITI QX4 3.5L
01-04 NISSAN PATHFINDER 3.5L

NI-0027

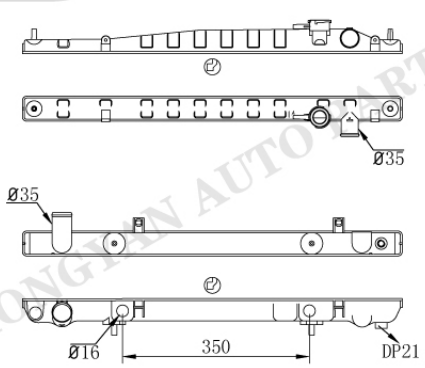

NI-0031-1AT

Tank size :(R8.5×5×4.5×47×713)
OEM :21460AG300/17
DPI :
NISSENS :
APPLICATION :
01-03 INFINITI QX4 3.5L
01-04 NISSAN PATHFINDER 3.5L

NI-12

HONGYAN AUTO PARTS

NISSAN/INFINITI

NI-0027

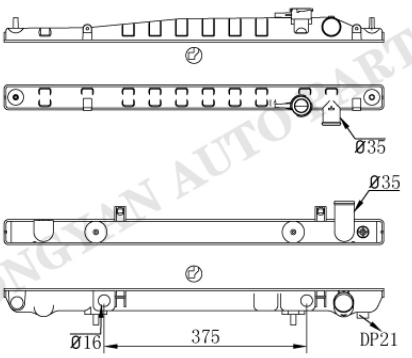

NI-0032AT/MT

Tank size :(R8.5×5×4.5×47×713)
OEM :
DPI :2075 2076 2055
NISSENS :
APPLICATION :
97-00 INFINITI QX4 3.3L
96-00 NISSAN PATHFINDER 3.3L

NI-0027

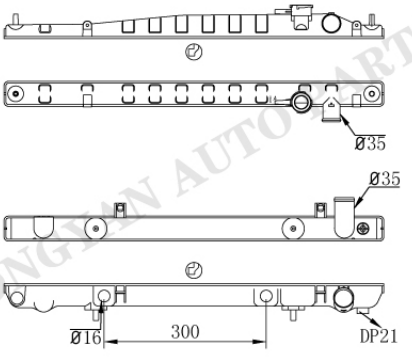

NI-0032-1AT

Tank size :(R8.5×5×4.5×47×713)
OEM :
DPI :
NISSENS :
APPLICATION :
97-00 INFINITI QX4 3.3L
96-00 NISSAN PATHFINDER 3.3L

NI-0027

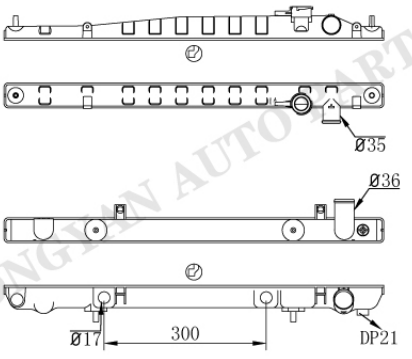

NI-0032-2AT

Tank size :(R8.5×5×4.5×47×713)
OEM :
DPI :
NISSENS :
APPLICATION :
97-00 INFINITI QX4 3.3L
96-00 NISSAN PATHFINDER 3.3L

NI-0027

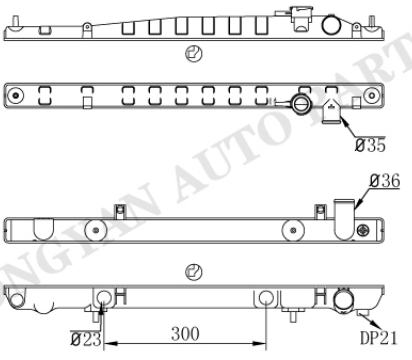

NI-0032-3AT

Tank size :(R8.5×5×4.5×47×713)
OEM :
DPI :
NISSENS :
APPLICATION :
97-00 INFINITI QX4 3.3L
96-00 NISSAN PATHFINDER 3.3L

HONGYAN AUTO PARTS

NISSAN/INFINITI

NI-0027

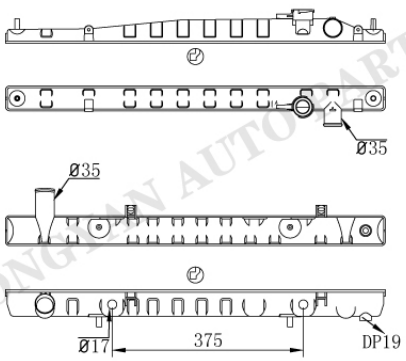

NI-0033AT/MT

Tank size :(R8.5×5×4.5×47/57×713)
OEM :
DPI :
NISSENS :
APPLICATION :

NI-0027

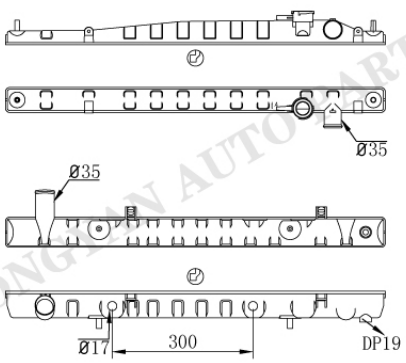

NI-0033-1AT

Tank size :(R8.5×5×4.5×47/57×713)
OEM :
DPI :
NISSENS :
APPLICATION :

NI-0027

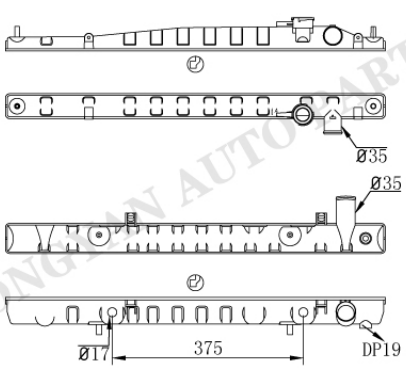

NI-0034AT/MT

Tank size :(R8.5×5×4.5×47/57×713)
OEM :
DPI :
NISSENS :
APPLICATION :

NI-0027

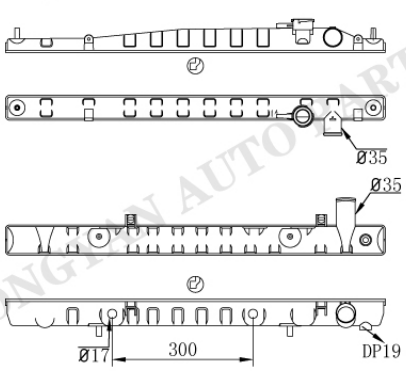

NI-0034-1AT

Tank size :(R8.5×5×4.5×47/57×713)
OEM :
DPI :
NISSENS :
APPLICATION :

NI-14

NISSAN/INFINITI

NI-0035

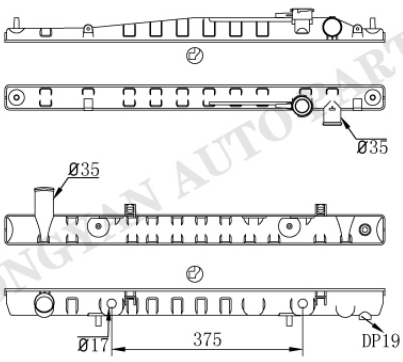

NI-0033AT/MT

Tank size :(R8.5×5×4.5×57×713)
OEM :
DPI :
NISSENS :
APPLICATION :

NI-0035

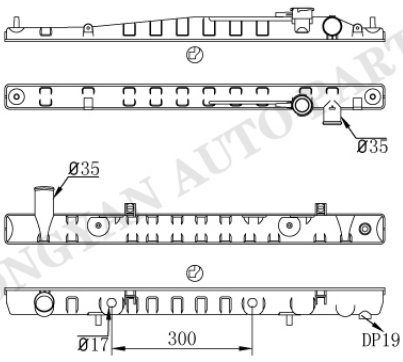

NI-0033-1AT

Tank size :(R8.5×5×4.5×57×713)
OEM :
DPI :
NISSENS :
APPLICATION :

NI-0035

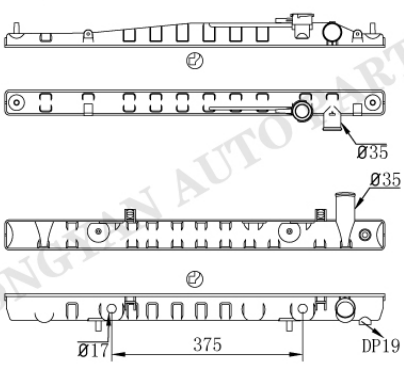

NI-0034AT/MT

Tank size :(R8.5×5×4.5×57×713)
OEM :21460VG100/E001
DPI :2075
NISSENS :
APPLICATION :
97-00 INFINITI QX4 3.3L
96-00 NISSAN PATHFINDER 3.3L

NI-0035

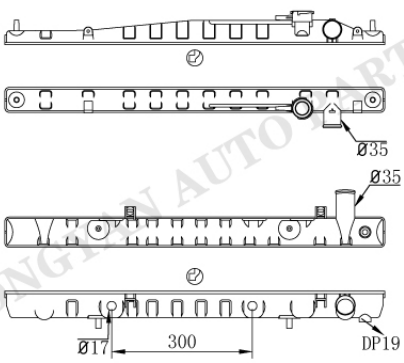

NI-0034-1AT

Tank size :(R8.5×5×4.5×57×713)
OEM :
DPI :
NISSENS :
APPLICATION :
97-00 INFINITI QX4 3.3L
96-00 NISSAN PATHFINDER 3.3L

NISSAN/INFINITI

NI-0035

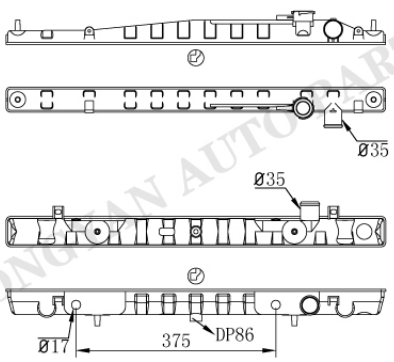

NI-0036AT/MT

Tank size :(R8.5×5×4×57×713)
OEM :21410QW005A/4A
DPI :2049
NISSENS :
APPLICATION :
01-04 NISSAN FRONTIER 3.3L
01-04 NISSAN XTERRA 3.3L

NI-0035

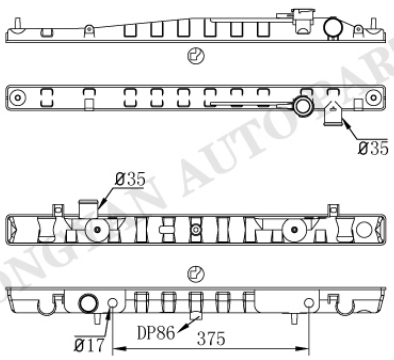

NI-0037AT/MT

Tank size :(R8.5×5×4×57×713)
OEM :
DPI :
NISSENS :
APPLICATION :
01-04 NISSAN FRONTIER 3.3L
01-04 NISSAN XTERRA 3.3L

NI-0038

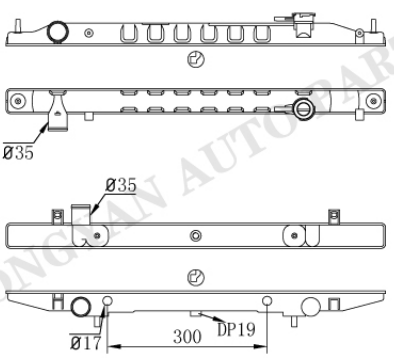

NI-0030AT/MT

Tank size :(R8.5×5×4.5×47×713)
OEM :
DPI :
NISSENS :
APPLICATION :

NI-0039

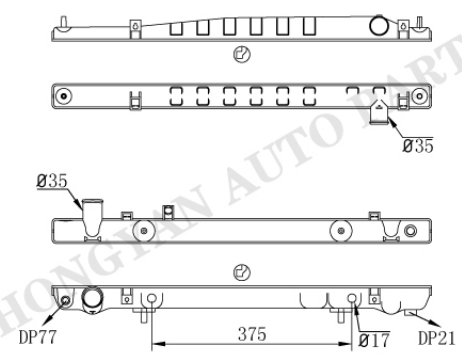

NI-0040AT/MT

Tank size :(R8.5×5×4.5×47×713)
OEM :21460AR000
DPI :2426
NISSENS :
APPLICATION :
03-04 INFINITI M45 4.5L
02-06 INFINITI Q45 4.5L

NI-16

NISSAN/INFINITI

NI-0041

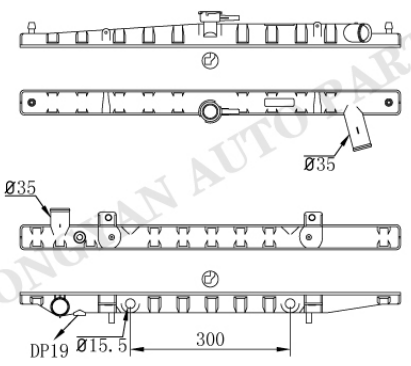

NI-0042AT/MT

Tank size :(R8.5×5×4.5×47×714)
OEM :214601E400/0E200/0E000
DPI :1573 1594
NISSENS :
APPLICATION :
93-99 NISSAN ALTIMA 2.4L

NI-0041

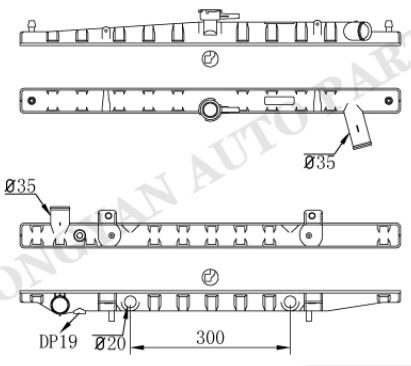

NI-0042-1AT

Tank size :(R8.5×5×4.5×47×714)
OEM :
DPI :
NISSENS :
APPLICATION :
93-99 NISSAN ALTIMA 2.4L

NI-0041

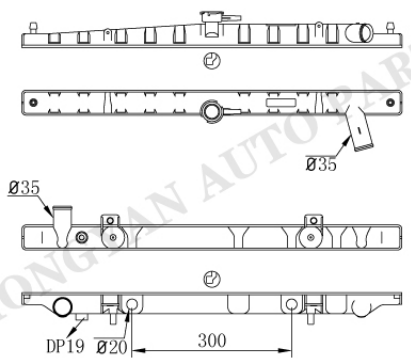

NI-0043AT/MT

Tank size :(R8.5×5×4.5×47×714)
OEM :214100Z800/600Z800
DPI :2333
NISSENS :
APPLICATION :
00-01 NISSAN ALTIMA 2.4L

NI-0041

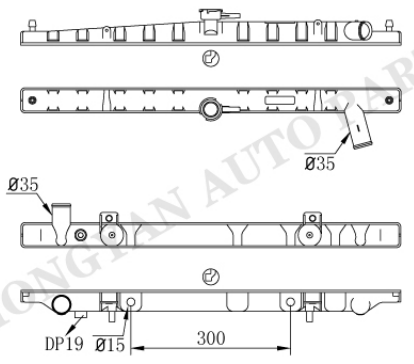

NI-0043-1AT

Tank size :(R8.5×5×4.5×47×714)
OEM :
DPI :
NISSENS :
APPLICATION :
00-01 NISSAN ALTIMA 2.4L

NISSAN/INFINITI

NI-0044

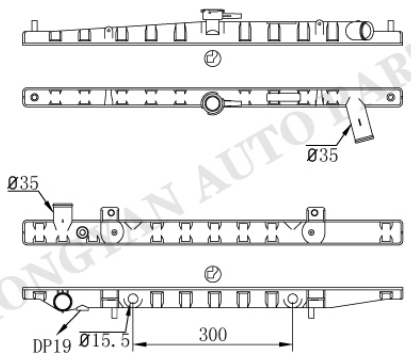

NI-0042AT/MT

Tank size :(R8.5×5×4.5×36/47×714)
OEM :
DPI :2150
NISSENS :
APPLICATION :

NI-0045

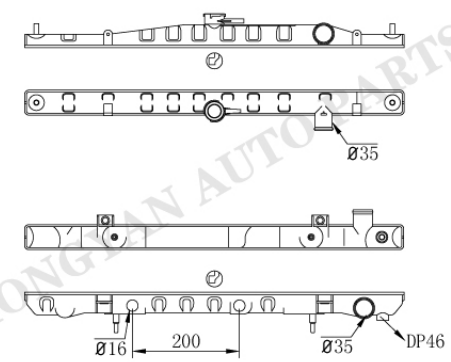

NI-0046AT/MT

Tank size :(R8.5×5×4.5×47×714)
OEM :214600P001/600/700
DPI :1561
NISSENS :
APPLICATION :
93-97 INFINITI J30 3.0L

NI-0045

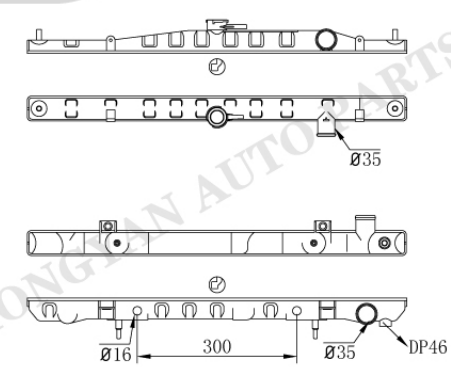

NI-0046-1AT

Tank size :(R8.5×5×4.5×47×714)
OEM :
DPI :
NISSENS :
APPLICATION :
93-97 INFINITI J30 3.0L

Tank size :
OEM :
DPI :
NISSENS :
APPLICATION :

HONGYAN AUTO PARTS

NI-18

NISSAN/INFINITI

NI-0048

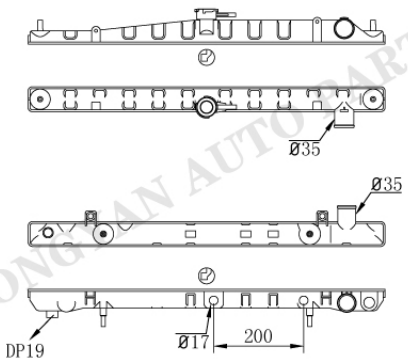

NI-0049AT/MT

Tank size :(R8×5×4×47×669)
OEM :
DPI :
NISSENS :
APPLICATION :

NI-0048

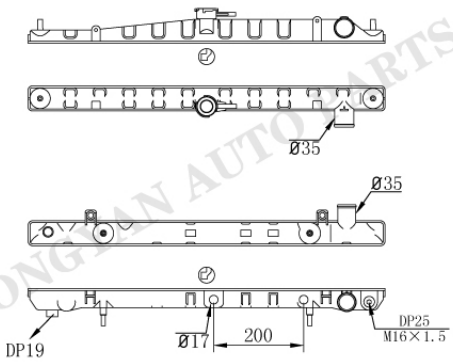

NI-0050AT/MT

Tank size :(R8×5×4×47×669)
OEM :
DPI :
NISSENS :
APPLICATION :

NI-0048

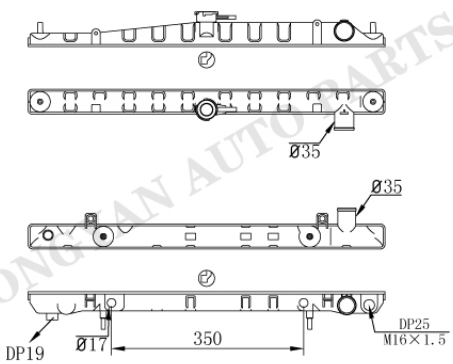

NI-0050-1AT

Tank size :(R8×5×4×47×669)
OEM :
DPI :
NISSENS :
APPLICATION :

NI-0048

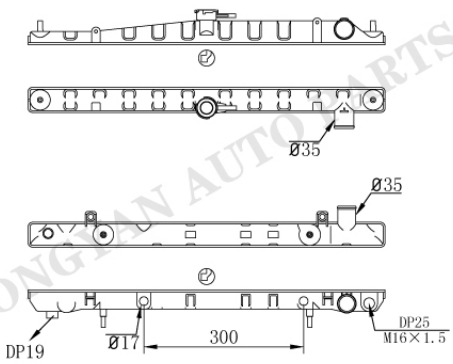

NI-0050-2AT

Tank size :(R8×5×4×47×669)
OEM :
DPI :
NISSENS :
APPLICATION :

HONGYAN AUTO PARTS

NISSAN/INFINITI

NI-0051

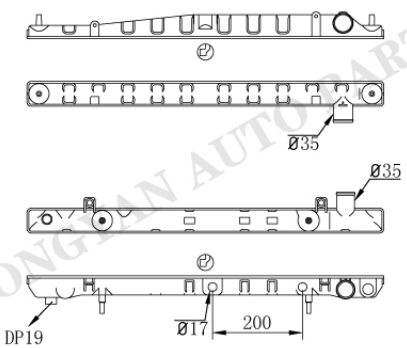

Tank size :(R8×5×4×47×669)
OEM :
DPI :
NISSENS :
APPLICATION :

NI-0049AT/MT

NI-0051

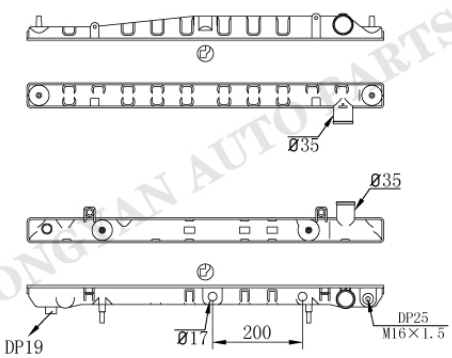

Tank size :(R8×5×4×47×669)
OEM :
DPI :
NISSENS :
APPLICATION :

NI-0050AT/MT

NI-0051

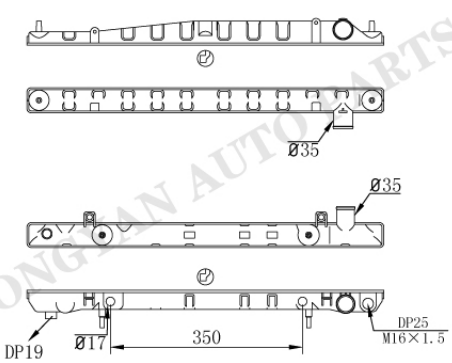

Tank size :(R8×5×4×47×669)
OEM :
DPI :
NISSENS :
APPLICATION :

NI-0050-1AT

NI-0051

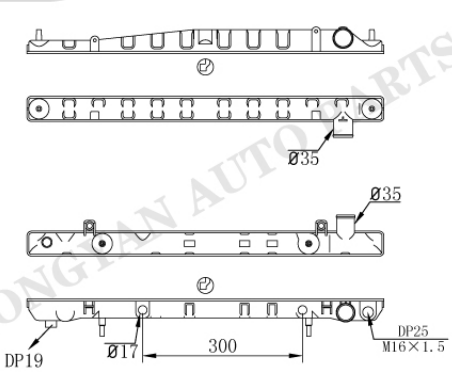

Tank size :(R8×5×4×47×669)
OEM :
DPI :
NISSENS :
APPLICATION :

NI-0050-2AT

HONGYAN AUTO PARTS

NISSAN/INFINITI

NI-0052

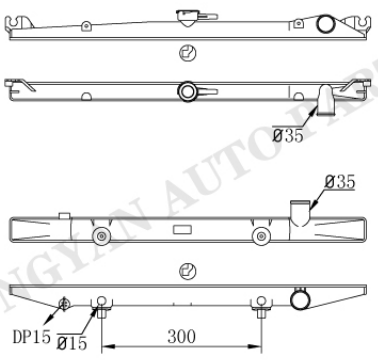

NI-0053AT/MT

Tank size : (R8×5×5×36/47×669)
OEM :2145001G11/0
DPI :145 223
NISSENS :
APPLICATION :
86-94 NISSAN D21 2.4/3.0L
87-95 NISSAN PATHFINDER 3.0L
95-97 NISSAN PICKUP 2.4L

NI-0054

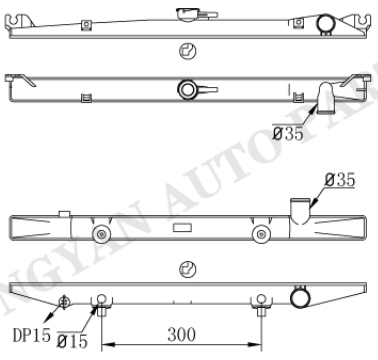

NI-0053AT/MT

Tank size :(R8×5×5×47×669)
OEM :2145007G11/09G11
DPI :314 1983
NISSENS :
APPLICATION :
86-94 NISSAN D21 2.4/3.0L
87-95 NISSAN PATHFINDER 3.0L
95-97 NISSAN PICKUP 2.4L

NI-0054

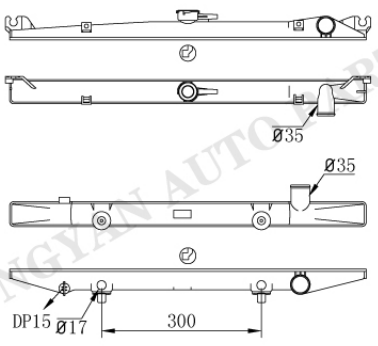

NI-0053-1AT

Tank size :(R8×5×5×47×669)
OEM :2145007G11/09G11
DPI :314 1983
NISSENS :
APPLICATION :
86-94 NISSAN D21 2.4/3.0L
87-95 NISSAN PATHFINDER 3.0L
95-97 NISSAN PICKUP 2.4L

NI-0054

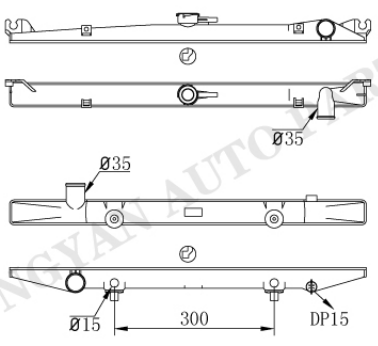

NI-0055AT/MT

Tank size : (R8×5×5×47×669)
OEM :2140010G10
DPI :1442
NISSENS :
APPLICATION :

HONGYAN AUTO PARTS

NISSAN/INFINITI

NI-0056

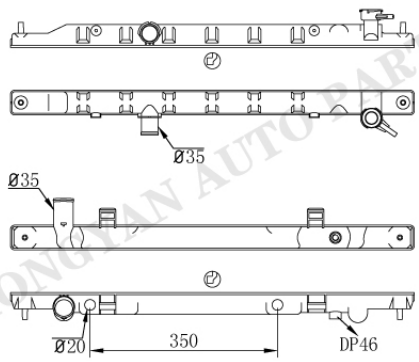

NI-0057AT/MT

Tank size :(R8×5×4×47×758)
OEM :21460CA010
DPI :2414
NISSENS :
APPLICATION :
02-06 NISSAN ALTIMA 2.5L

NI-0056

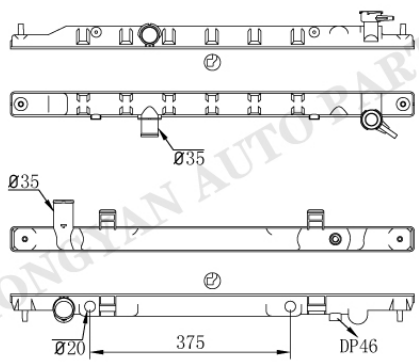

NI-0057-1AT

Tank size :(R8×5×4×47×758)
OEM :
DPI :
NISSENS :
APPLICATION :
02-06 NISSAN ALTIMA 2.5L

NI-0056

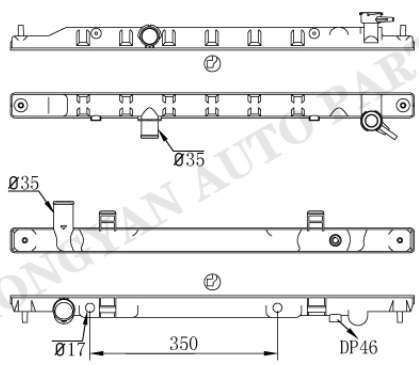

NI-0057-2AT

Tank size :(R8×5×4×47×758)
OEM :
DPI :
NISSENS :
APPLICATION :
02-06 NISSAN ALTIMA 2.5L

NI-0058

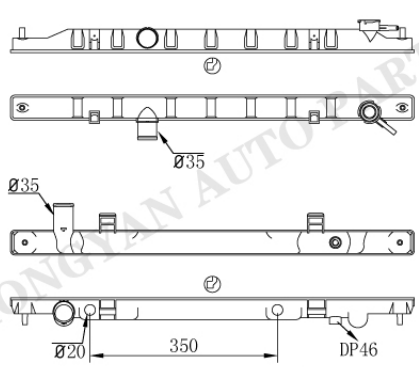

NI-0057AT/MT

Tank size :(R8×5×4×47×758)
OEM :
DPI :
NISSENS :
APPLICATION :
02-06 NISSAN ALTIMA 2.5L

HONGYAN AUTO PARTS

NISSAN/INFINITI

NI-0059

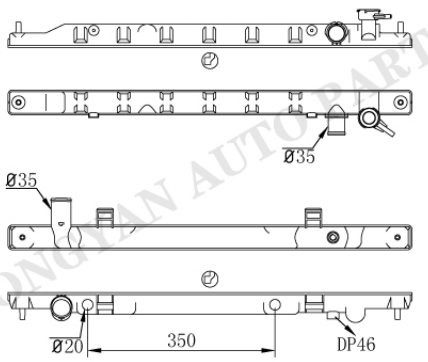

NI-0057AT/MT

Tank size :(R8×5×4×47×758)
OEM :
DPI :
NISSENS :
APPLICATION :
02-06 NISSAN ALTIMA 2.5L

NI-0056

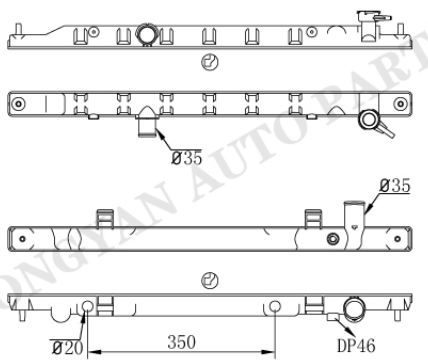

NI-0060AT/MT

Tank size :(R8×5×4×47×758)
OEM :21460CA010/8J000
DPI :2578 2692
NISSENS :
APPLICATION :
03-07 NISSAN MURANO 3.5L
04-09 NISSAN QUEST 3.5L

NI-0056

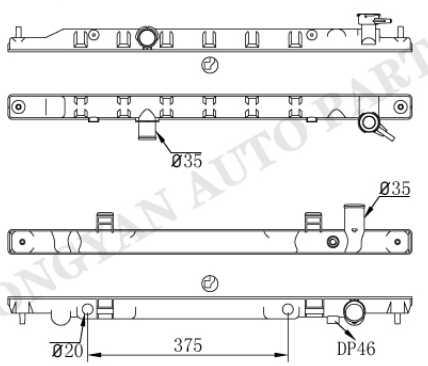

NI-0060-1AT

Tank size :(R8×5×4×47×758)
OEM :
DPI :
NISSENS :
APPLICATION :
03-07 NISSAN MURANO 3.5L
04-09 NISSAN QUEST 3.5L

NI-0056

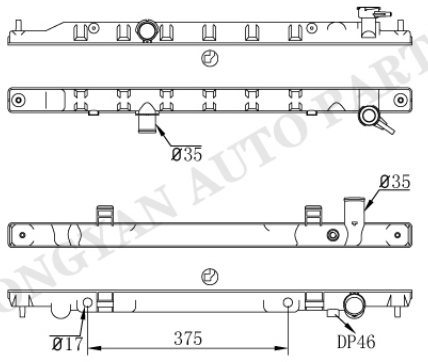

NI-0060-2AT

Tank size :(R8×5×4×47×758)
OEM :
DPI :
NISSENS :
APPLICATION :
03-07 NISSAN MURANO 3.5L
04-09 NISSAN QUEST 3.5L

NISSAN/INFINITI

NI-0058

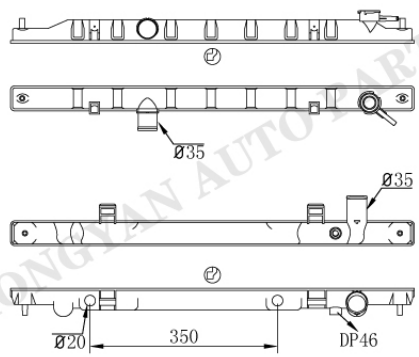

NI-0060AT/MT

Tank size :(R8×5×4×47×758)
OEM :
DPI :
NISSENS :
APPLICATION :
03-07 NISSAN MURANO 3.5L
04-09 NISSAN QUEST 3.5L

NI-0059

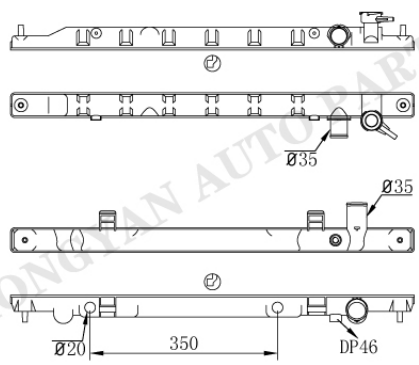

NI-0060AT/MT

Tank size :(R8×5×4×47×758)
OEM :
DPI :
NISSENS :
APPLICATION :
03-07 NISSAN MURANO 3.5L
04-09 NISSAN QUEST 3.5L

NI-0061

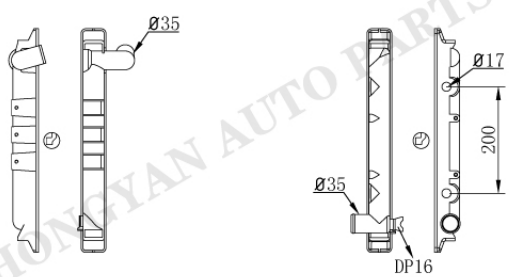

NI-0062AT/MT

Tank size :(R9×5×5×46.6×420)
OEM :2146017C00/G5411/01
DPI :219 220
NISSENS :
APPLICATION :
87-88 NISSAN VAN 2.4L

NI-0063

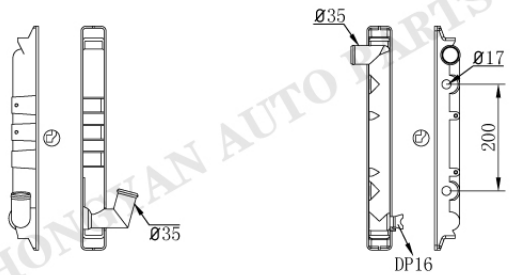

NI-0064AT/MT

Tank size :(R9×5×5×46.6×420)
OEM :
DPI :
NISSENS :
APPLICATION :
87-88 NISSAN VAN 2.4L

HONGYAN AUTO PARTS

NISSAN/INFINITI

NI-0065

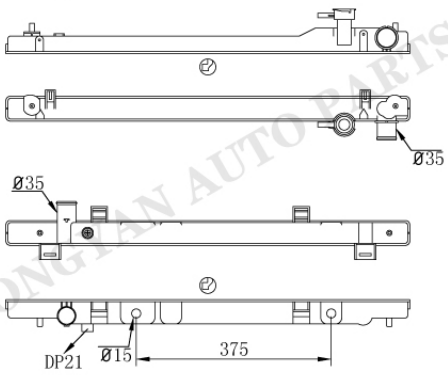

NI-0066AT/MT

Tank size :(R8×5×4×47×758)
OEM :21460AM900
DPI :2588
NISSENS :
APPLICATION :
03-08 INFINITI G35 3.5L

NI-0067

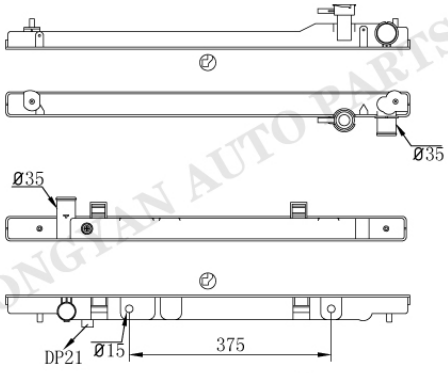

NI-0068AT/MT

Tank size :(R8×5×4×47×758)
OEM :21460CG000
DPI :2683
NISSENS :
APPLICATION :
03-08 INFINITI FX35 3.5L

NI-0069

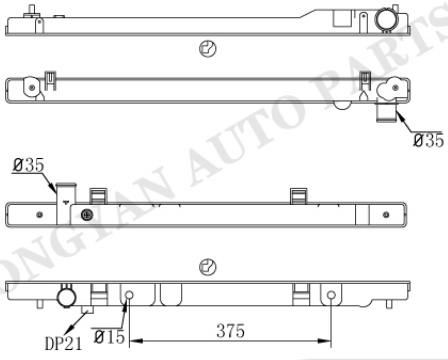

NI-0068AT/MT

Tank size :(R8×5×4×47×758)
OEM :21460CG200
DPI :2671
NISSENS :
APPLICATION :
03-05 INFINITI FX45 4.5

NI-0070

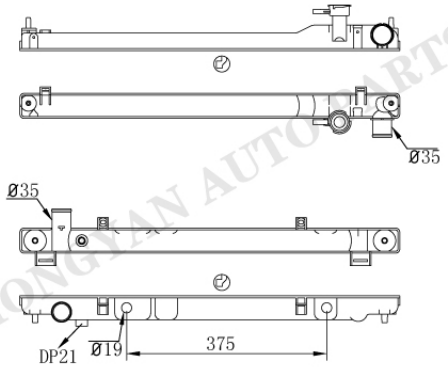

NI-0071AT/MT

Tank size :(R8×5×4.5×47×713)
OEM :21460AL600/AQ800/AL500
DPI :2455
NISSENS :
APPLICATION :
03-05 INFINITI G35 3.5L

HONGTIAN AUTO PARTS

NISSAN/INFINITI

NI-0070

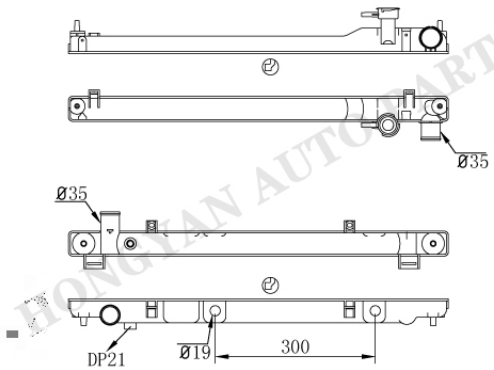

NI-0071-1AT

Tank size :(R8×5×4.5×47×713)
OEM :21460AL600/AQ800/AL500
DPI :2455
NISSENS :
APPLICATION :
03-05 INFINITI G35 3.5L

NI-0072

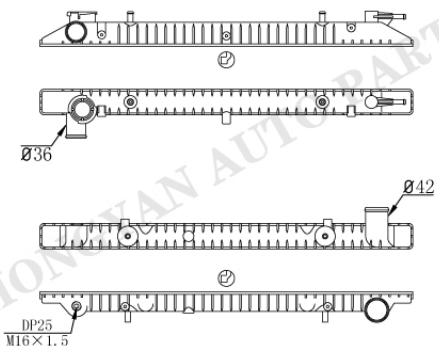

NI-0073

Tank size :(R8.5×5×5×48×699.8)
OEM :214109C001/2/101/7C700
DPI :
NISSENS :
APPLICATION :

NI-0072

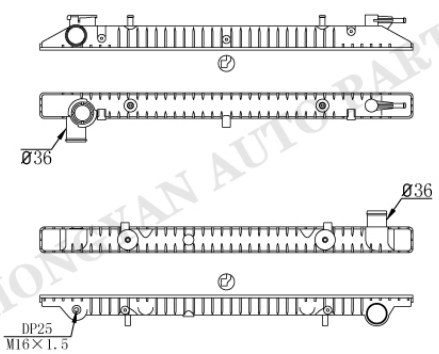

NI-0073-1

Tank size :(R8.5×5×5×48×699.8)
OEM :214109C001/2/101/7C700
DPI :
NISSENS :
APPLICATION :

NI-0074

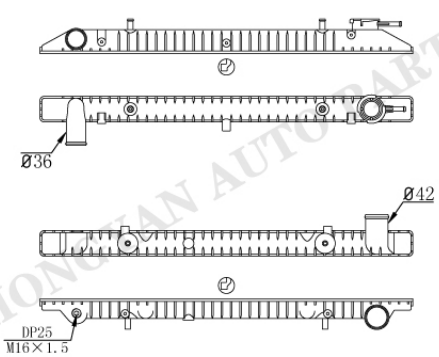

NI-0073

Tank size :(R8.5×5×5×48×699.8)
OEM :
DPI :
NISSENS :
APPLICATION :

HONGYAN AUTO PARTS

NISSAN/INFINITI

NI-0075

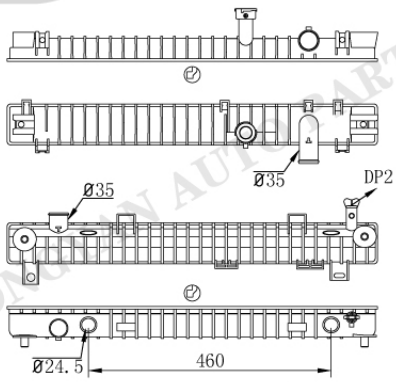

NI-0076AT/MT

Tank size :(R7×5×5×77×695)
OEM :214607S000
DPI :2691
NISSENS :
APPLICATION :
04-10 INFINITI QX56 5.6L
05-14 NISSAN ARMADA 5.6L
04-14 NISSAN TITAN 5.6L

NI-0077

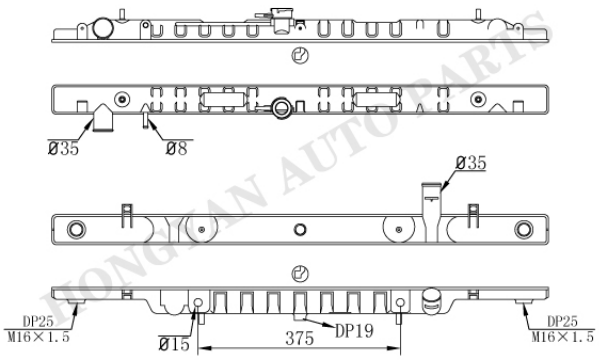

NI-0078AT/MT

Tank size :(R8×5×4.5×52/57×932)
OEM :21460VB000
DPI :
NISSENS :
APPLICATION :

NI-0077

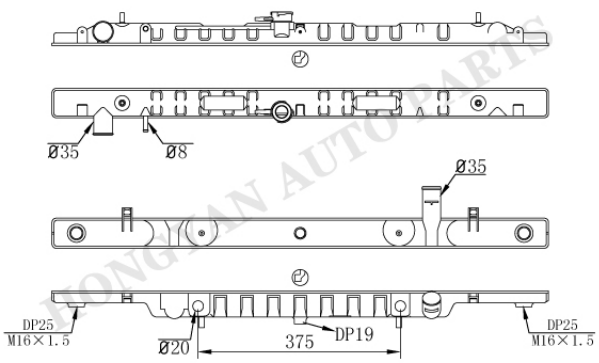

NI-0078-1AT

Tank size :(R8×5×4.5×52/57×932)
OEM :
DPI :
NISSENS :
APPLICATION :

NI-0079

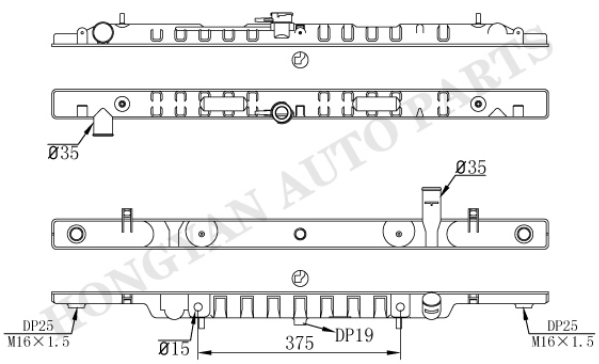

NI-0078AT/MT

Tank size :(R8×5×4.5×52/57×932)
OEM :
DPI :
NISSENS :
APPLICATION :

NISSAN/INFINITI

NI-0080

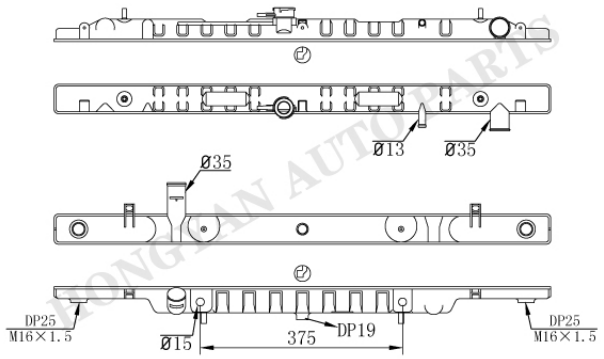

NI-0081AT/MT

Tank size :(R8×5×4.5×52/57×932)
OEM :
DPI :
NISSENS :
APPLICATION :

NI-0080

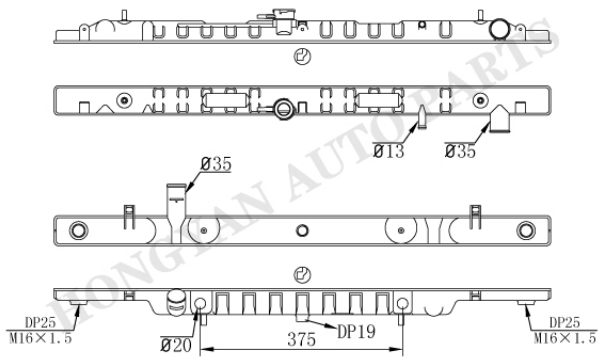

NI-0081-1AT

Tank size :(R8×5×4.5×52/57×932)
OEM :
DPI :
NISSENS :
APPLICATION :

NI-0082

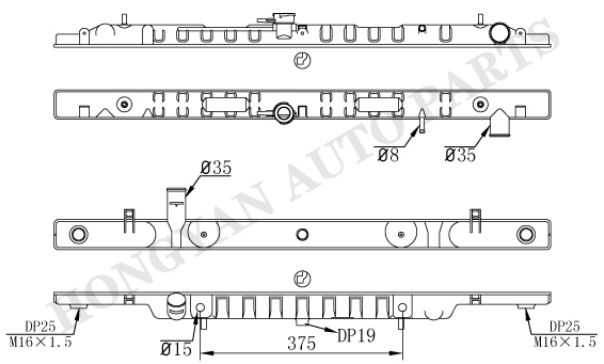

NI-0081AT/MT

Tank size :(R8×5×4.5×52/57×932)
OEM :
DPI :
NISSENS :
APPLICATION :

NI-0083

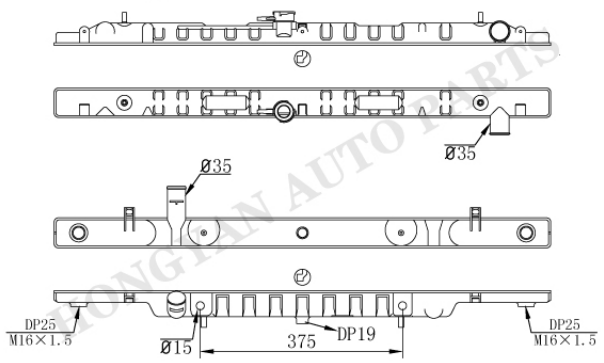

NI-0081AT/MT

Tank size :(R8×5×4.5×52/57×932)
OEM :
DPI :
NISSENS :
APPLICATION :

HONGYAN AUTO PARTS

NISSAN/INFINITI

NI-0084

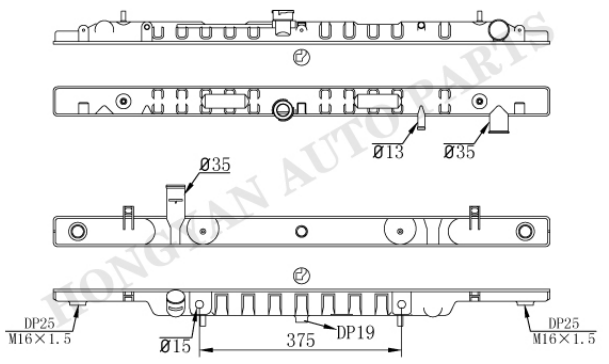

NI-0081AT/MT

Tank size :(R8×5×4.5×52/57×932)
OEM :
DPI :
NISSENS :
APPLICATION :

NI-0085

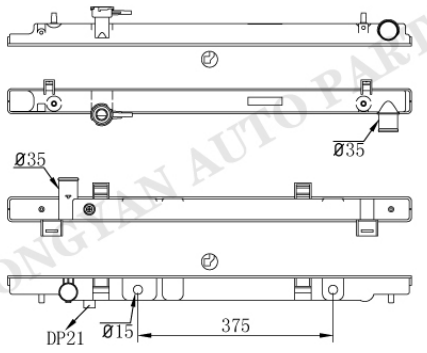

NI-0066AT/MT

Tank size :(R8×5×4×47×758)
OEM :21410CD010/60CD010
DPI :2576 2577
NISSENS :
APPLICATION :
03-06 NISSAN 350Z 3.5L

NI-0086

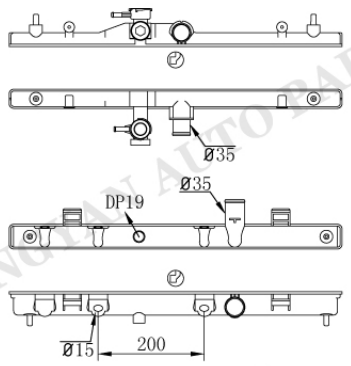

NI-0087AT/MT

Tank size :(R9×5×4×36/46.5×624.8)
OEM :21460ED500
DPI :
NISSENS :
APPLICATION :

NI-0086

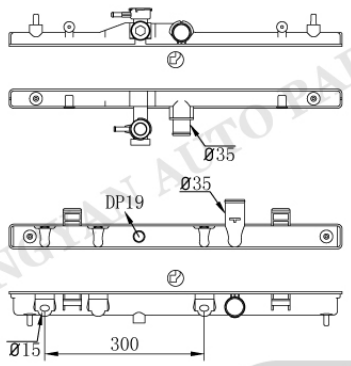

NI-0087-1AT

Tank size :(R9×5×4×36/46.5×624.8)
OEM :21460ED500
DPI :
NISSENS :
APPLICATION :

NISSAN/INFINITI

NI-0088

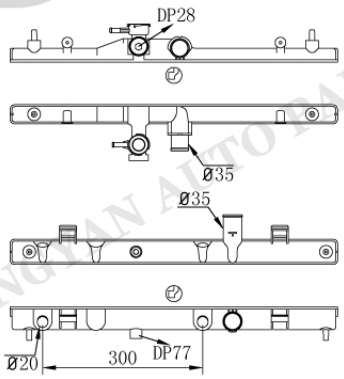

NI-0089AT/MT

Tank size :(R8×5×4×36/47×613.5)
OEM :21410JX00A 21460JX10A
DPI :
NISSENS :
APPLICATION :
NV200

NI-0090

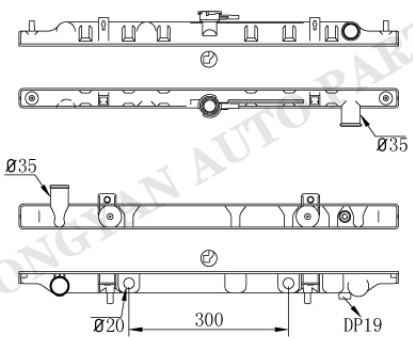

NI-0091AT/MT

Tank size :(R8.5×5×4×36/47×713)
OEM :214603J100 214102J200
DPI :
NISSENS :
APPLICATION :

NI-0090

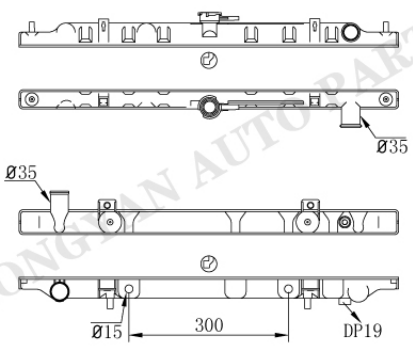

NI-0091-1AT

Tank size :(R8.5×5×4×36/47×713)
OEM :
DPI :
NISSENS :
APPLICATION :

NI-0090

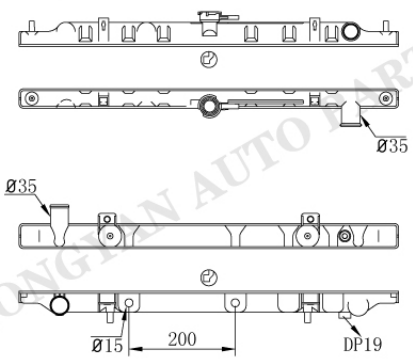

NI-0091-2AT

Tank size :(R8.5×5×4×36/47×713)
OEM :
DPI :
NISSENS :
APPLICATION :

HONGYAN AUTO PARTS

NISSAN/INFINITI

NI-0090

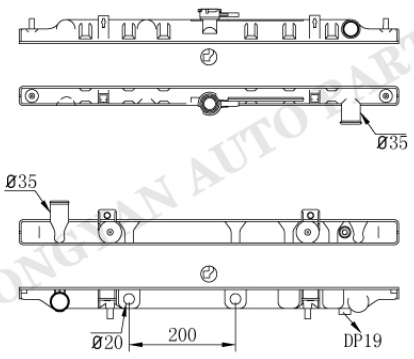

NI-0091-3AT

Tank size :(R8.5×5×4×36/47×713)
OEM :
DPI :
NISSENS :
APPLICATION :

NI-0090

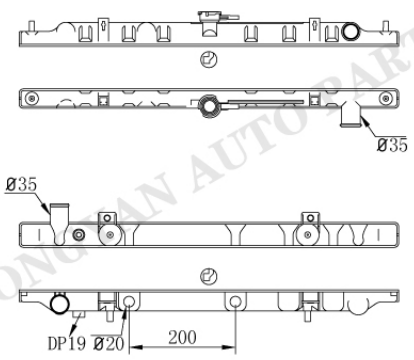

NI-0092AT/MT

Tank size :(R8.5×5×4×36/47×713)
OEM :
DPI :
NISSENS :
APPLICATION :

NI-0093

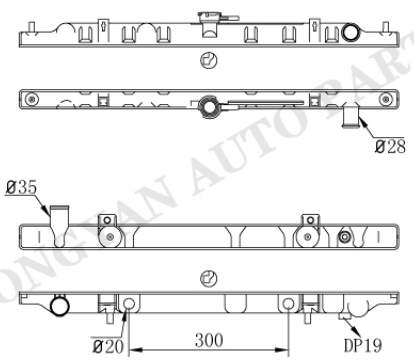

NI-0091AT/MT

Tank size :(R8.5×5×4×36/47×713)
OEM :
DPI :
NISSENS :
APPLICATION :

NI-0090

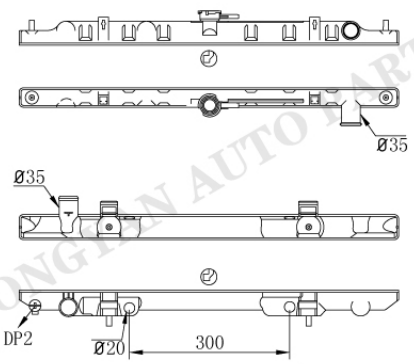

NI-0094AT/MT

Tank size :(R8.5×5×4×36/47×713)
OEM :21460M200
DPI :2328
NISSENS :
APPLICATION :
00-01 NISSAN SENTRA 2.0L

NISSAN/INFINITI

NI-0090

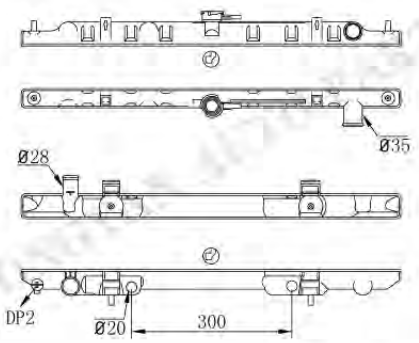

NI-0095AT/MT

Tank size :(R8.5×5×4×36/47×713)
OEM :
DPI :
NISSENS :
APPLICATION :
00-01 NISSAN SENTRA 2.0L

NI-0090

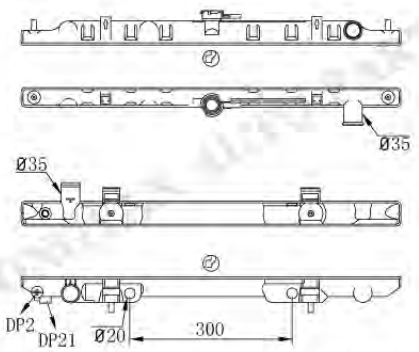

NI-0096AT/MT

Tank size :(R8.5×5×4×36/47×713)
OEM :214605V203/703/WF123/8H603
DPI :
NISSENS :
APPLICATION :

NI-0097

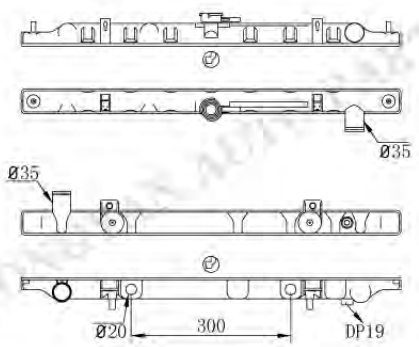

NI-0091AT/MT

Tank size :(R8.5×5×4×47×713)
OEM :
DPI :
NISSENS :
APPLICATION :

NI-0097

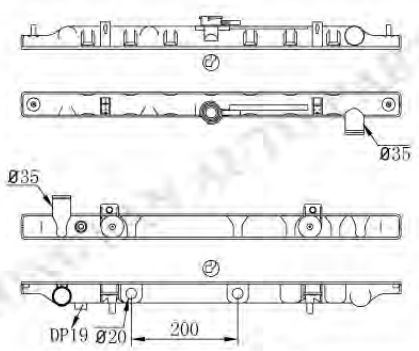

NI-0092AT/MT

Tank size :(R8.5×5×4×47×713)
OEM :
DPI :
NISSENS :
APPLICATION :

NI-32

NISSAN/INFINITI

NI-0097

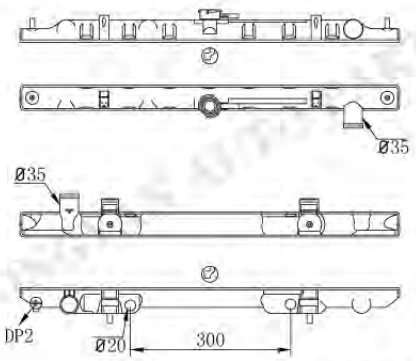

NI-0094AT/MT

Tank size : (R8.5×5×4×47×713)
OEM :
DPI :
NISSENS :
APPLICATION :

NI-0098

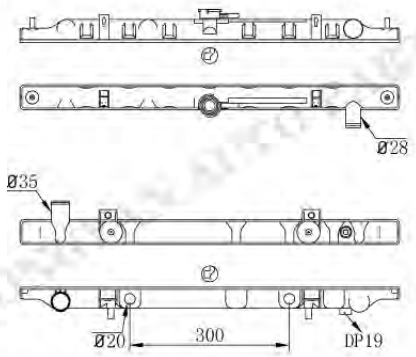

NI-0091AT/MT

Tank size : (R8.5×5×4×47×713)
OEM :
DPI :
NISSENS :
APPLICATION :

NI-0099

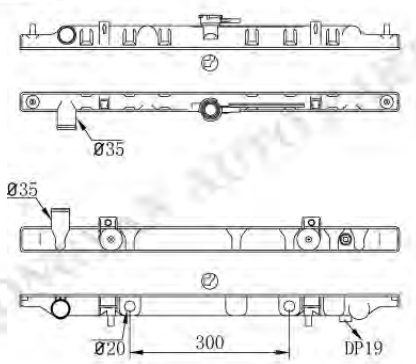

NI-0091AT/MT

Tank size : (R8.5×5×4×36/47×713)
OEM :
DPI :
NISSENS :
APPLICATION :

NI-0099

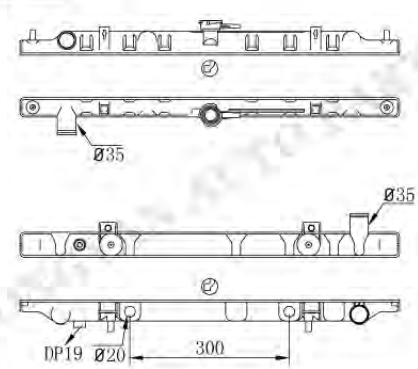

NI-0100AT/MT

Tank size : (R8.5×5×4×36/47×713)
OEM :
DPI :
NISSENS :
APPLICATION :

NISSAN/INFINITI

NI-0099

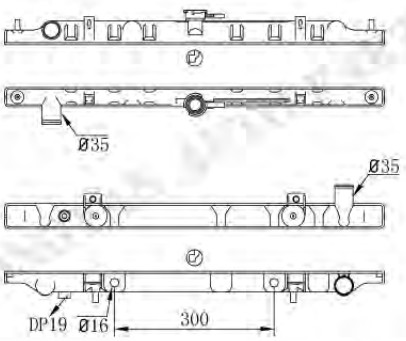

NI-0100-1AT

Tank size :(R8.5×5×4×36/47×713)
OEM :2146031U10/0L710
DPI :
NISSENS :
APPLICATION :

NI-0099

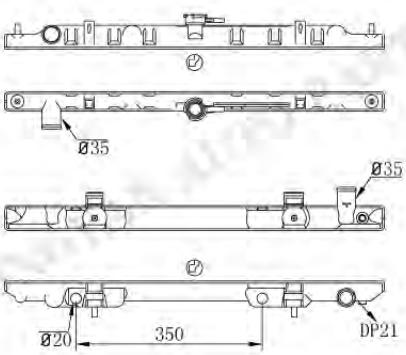

NI-0101AT/MT

Tank size :(R8.5×5×4×36/47×713)
OEM :2146002Y000/900
DPI :2329 2612
NISSENS :
APPLICATION :
02-04 INFINITI I30 3.0L
00-03 NISSAN MAXIMA 3.0/3.5L

NI-0099-1

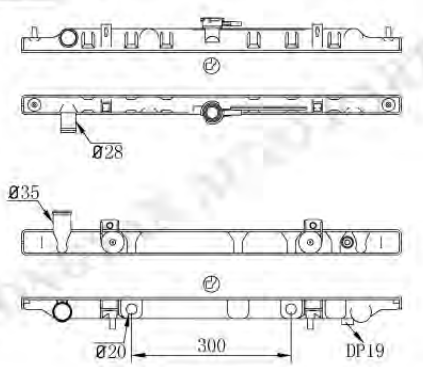

NI-0091AT/MT

Tank size :(R8.5×5×4×36/47×713)
OEM :
DPI :
NISSENS :
APPLICATION :

NI-0099-1

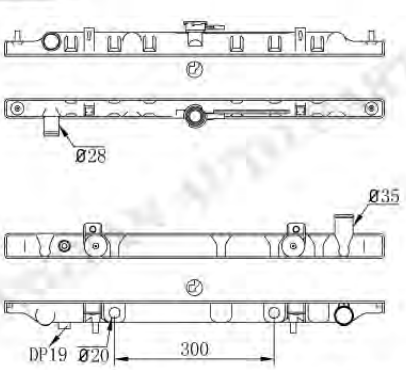

NI-0100AT/MT

Tank size :(R8.5×5×4×36/47×713)
OEM :
DPI :
NISSENS :
APPLICATION :

NI-34

NISSAN/INFINITI

NI-0102

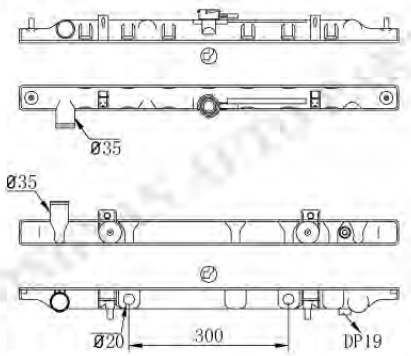

NI-0091AT/MT

Tank size :(R8.5×5×4×47×713)
OEM :
DPI :
NISSENS :
APPLICATION :

NI-0102

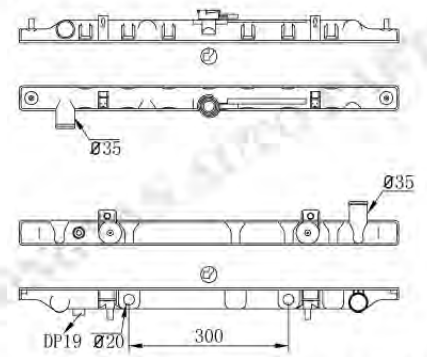

NI-0100AT/MT

Tank size :(R8.5×5×4×47×713)
OEM :1752 2181
DPI :
NISSENS :
APPLICATION :
96-99 INFINITI I30 3.0L
95-99 NISSAN MAXIMA 3.0L

NI-0102

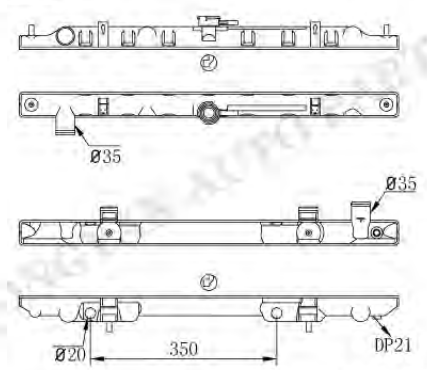

NI-0101AT/MT

Tank size :(R8.5×5×4×47×713)
OEM :2146035U00
DPI :
NISSENS :
APPLICATION :

NI-0103

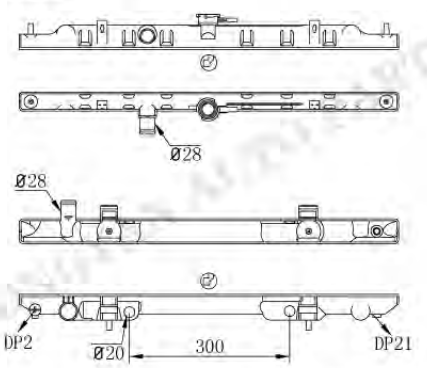

NI-0104AT/MT

Tank size :(R8.5×5×4×36/47×713)
OEM :214604M400/700417
DPI :2346 2327
NISSENS :
APPLICATION :
00-06 NISSAN SENTRA 1.8L

NISSAN/INFINITI

NI-0103

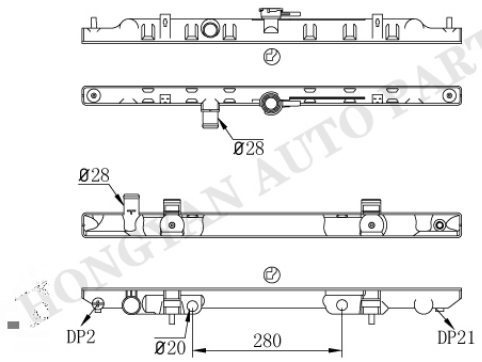

NI-0104-1AT

Tank size :(R8.5×5×4×36/47×713)
OEM :214604M400/700417
DPI :2346 2327
NISSENS :
APPLICATION :
00-06 NISSAN SENTRA 1.8L

NI-0105

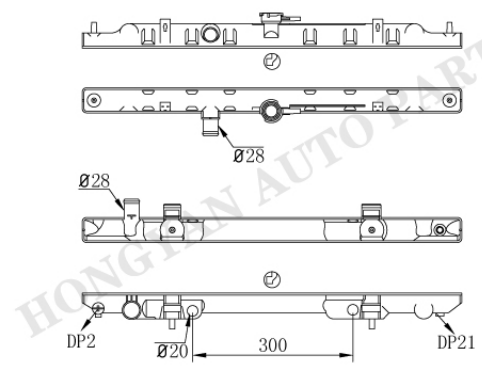

NI-0104AT/MT

Tank size :(R8.5×5×4×47×713)
OEM :
DPI :
NISSENS :
APPLICATION :

NI-0106

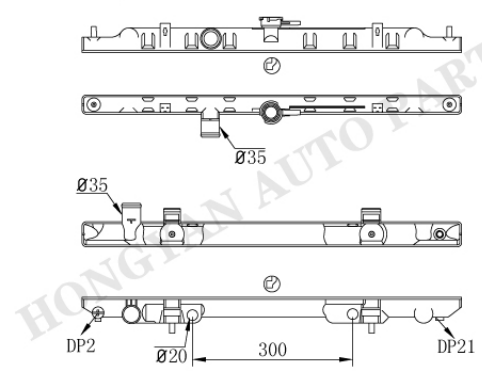

NI-0107AT/MT

Tank size :(R8.5×5×4×36/47×713)
OEM :214606N103
DPI :
NISSENS :
APPLICATION :

NI-0106

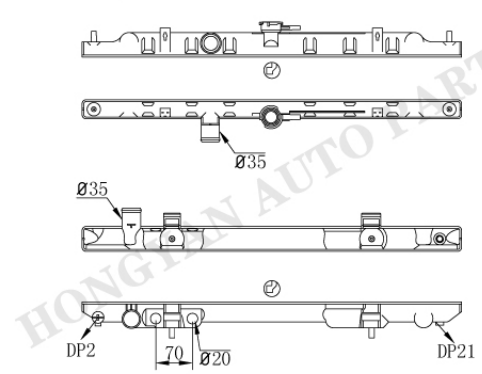

NI-0107-1AT

Tank size :(R8.5×5×4×36/47×713)
OEM :214606N103
DPI :
NISSENS :
APPLICATION :

HONGHAN AUTO PARTS

NISSAN/INFINITI

NI-0106

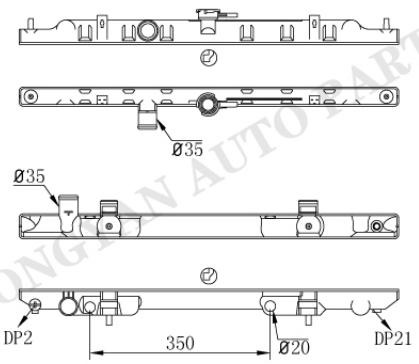

NI-0107-2AT

Tank size :(R8.5×5×4×36/47×713)
OEM :21460AU303
DPI :
NISSENS :
APPLICATION :

NI-0108

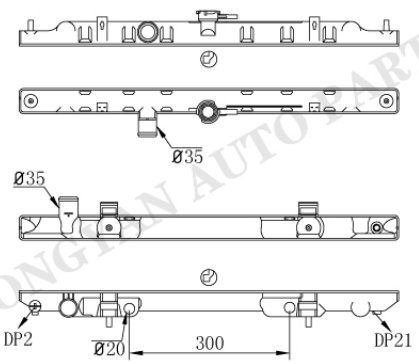

NI-0107AT/MT

Tank size :(R8.5×5×4×47×713)
OEM :
DPI :2469
NISSENS :
APPLICATION :
02-06 NISSAN SENTRA 2.5L

NI-0108

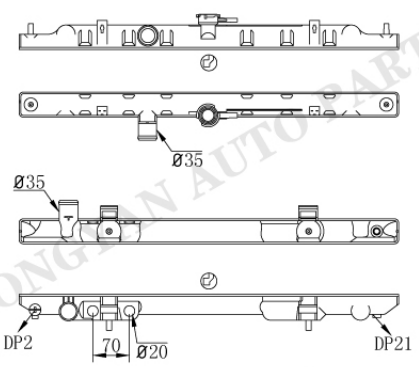

NI-0107-1AT

Tank size :(R8.5×5×4×47×713)
OEM :
DPI :
NISSENS :
APPLICATION :

NI-0108

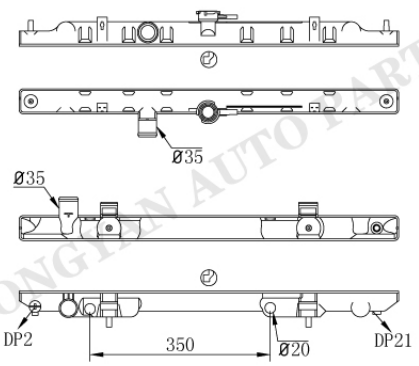

NI-0107-2AT

Tank size :(R8.5×5×4×47×713)
OEM :
DPI :
NISSENS :
APPLICATION :

NISSAN/INFINITI

NI-0108

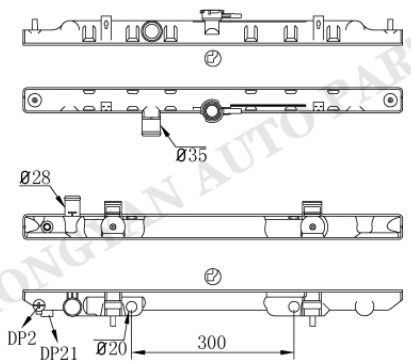

NI-0109AT/MT

Tank size :(R8.5×5×4×47×713)
OEM :
DPI :
NISSENS :
APPLICATION :

NI-0108

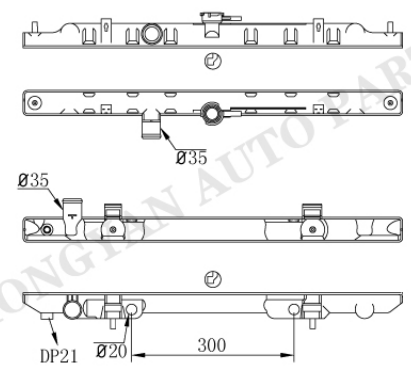

NI-0109-1MT

Tank size :(R8.5×5×4×47×713)
OEM :
DPI :
NISSENS :
APPLICATION :

NI-0110

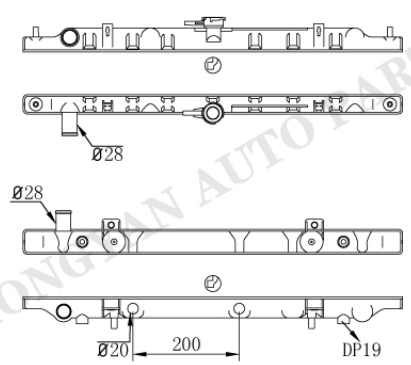

NI-0111AT/MT

Tank size :(R8.5×5×4×36/47×713)
OEM :
DPI :
NISSENS :
APPLICATION :

NI-0110

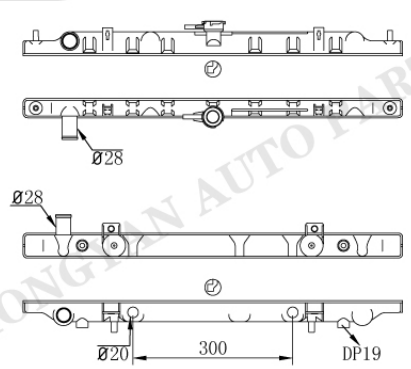

NI-0111-1AT

Tank size :(R8.5×5×4×36/47×713)
OEM :
DPI :
NISSENS :
APPLICATION :

HONGYAN AUTO PARTS

NISSAN/INFINITI

NI-0112

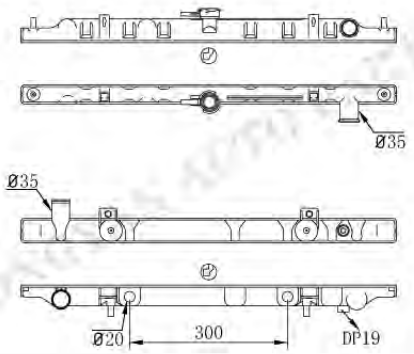

NI-0091AT/MT

Tank size :(R8.5×5×4.5×36/47×713)
OEM :
DPI :2413
NISSENS :
APPLICATION :
99-02 INFINITI G20 2.0L

NI-0113

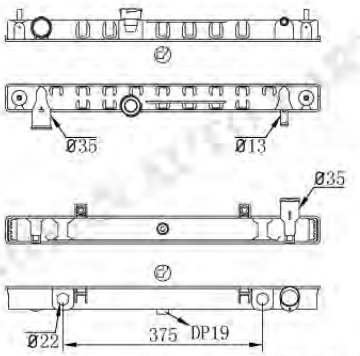

NI-0114AT/MT

Tank size :(R8×5×4×52×591)
OEM :
DPI :
NISSENS :
APPLICATION :

NI-0113

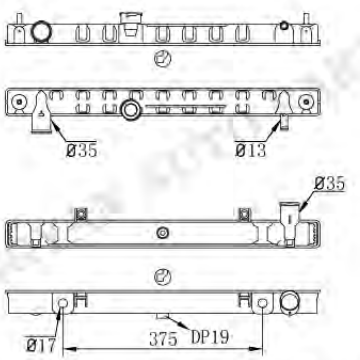

NI-0114-1AT

Tank size :(R8×5×4×52×591)
OEM :
DPI :
NISSENS :
APPLICATION :

NI-0115

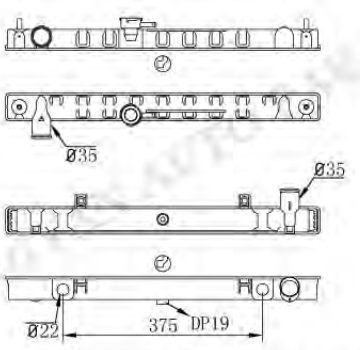

NI-0114AT/MT

Tank size :(R8×5×4×52×591)
OEM :
DPI :
NISSENS :
APPLICATION :

NISSAN/INFINITI

NI-0116

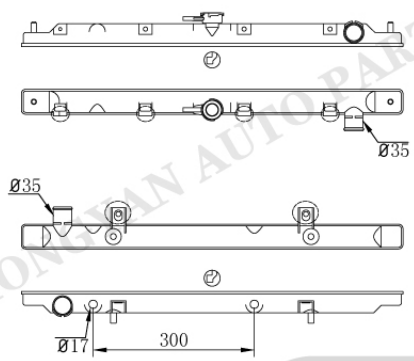

NI-0117AT/MT

Tank size :(R9×4×5×48×717)
OEM :214109F500/10/2F000
DPI :
NISSENS :
APPLICATION :

NI-0116

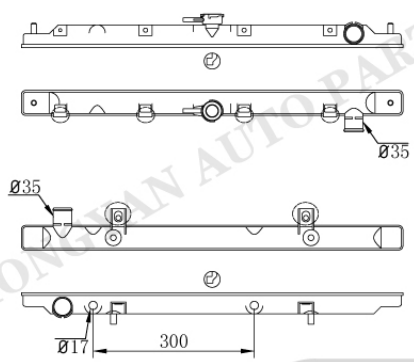

NI-0118AT/MT

Tank size :(R9×4×5×48×717)
OEM :
DPI :
NISSENS :
APPLICATION :

NI-0119

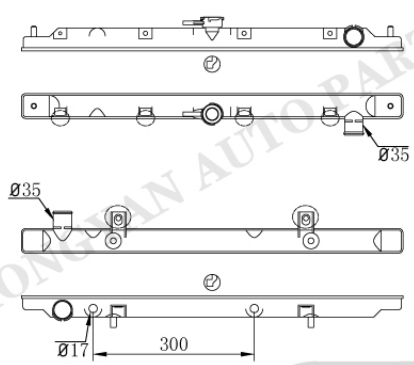

NI-0117AT/MT

Tank size :(R9×4×5×48×717)
OEM :
DPI :
NISSENS :
APPLICATION :

NI-0120

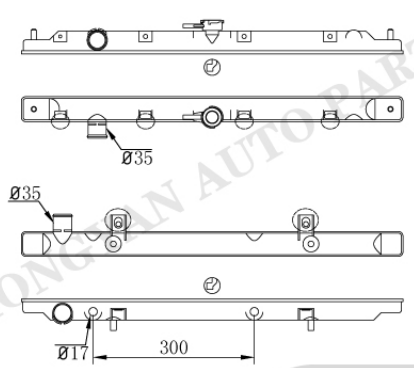

NI-0118AT/MT

Tank size :(R9×4×5×48×717)
OEM :
DPI :
NISSENS :
APPLICATION :

HONGYAN AUTO PARTS

NISSAN/INFINITI

NI-0121

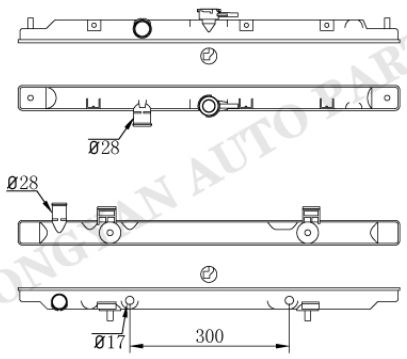

NI-0122AT/MT

Tank size :(R8×5×5×47×717)
OEM :21410BM402/AV700
DPI :
NISSENS :
APPLICATION :

NI-0121

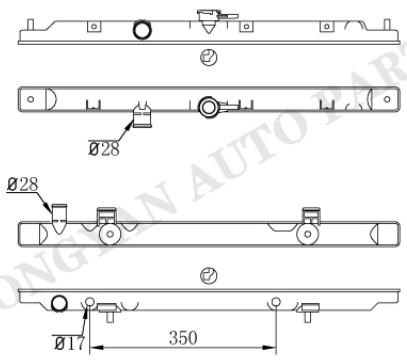

NI-0122-1AT

Tank size :(R8×5×5×47×717)
OEM :21410BM402/AV700
DPI :
NISSENS :
APPLICATION :

NI-0123

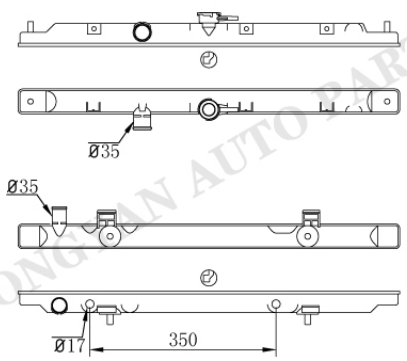

NI-0124AT/MT

Tank size :(R8×5×5×47×717)
OEM :21410AV600/BN300
21460AV600
DPI :
NISSENS :
APPLICATION :

NI-0123

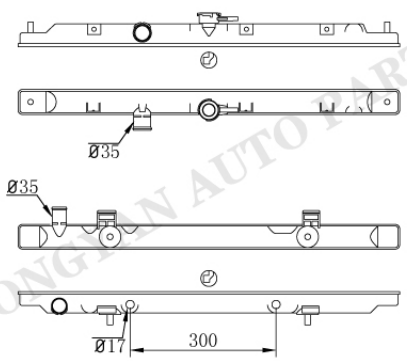

NI-0124-1AT

Tank size :(R8×5×5×47×717)
OEM :21410AV600/BN300
21460AV600
DPI :
NISSENS :
APPLICATION :

HONGYAN AUTO PARTS

NISSAN/INFINITI

NI-0125

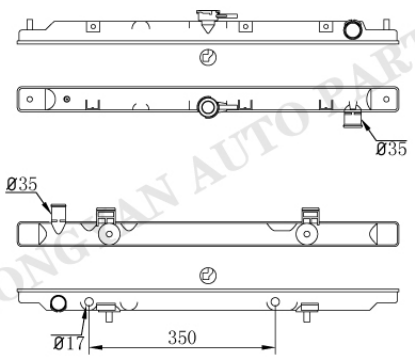

NI-0124AT/MT

Tank size :(R8×5×5×47×717)
OEM :
DPI :
NISSENS :
APPLICATION :

NI-0125

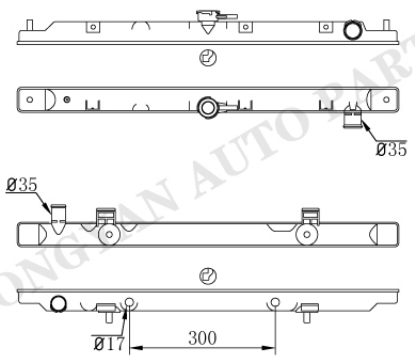

NI-0124-1AT

Tank size :(R8×5×5×47×717)
OEM :
DPI :
NISSENS :
APPLICATION :

NI-0126

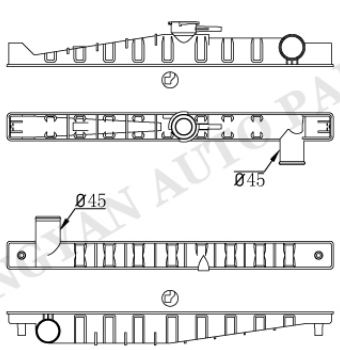

NI-0127

Tank size :(R8.5×5×4×52×613)
OEM :2140034200/02/06/08/11/12
DPI :
NISSENS :
APPLICATION :

NI-0128

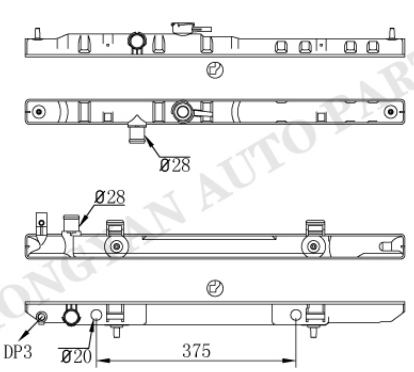

NI-0129AT/MT

Tank size :(R8×5×4.5×47×713)
OEM :
DPI :
NISSENS :
APPLICATION :

HONGYAN AUTO PARTS

NISSAN/INFINITI

NI-0130AT/MT

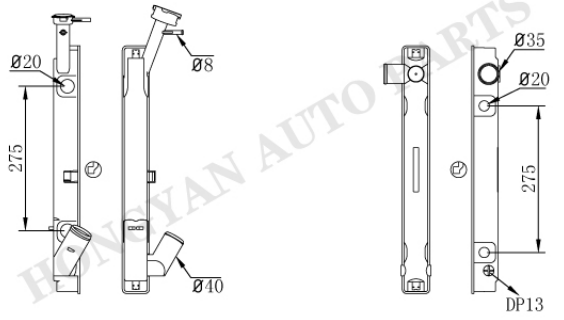

NI-0131AT/MT

Tank size :(R8×5×4×52×470)
OEM :214101Y105
DPI :
NISSENS :
APPLICATION :

NI-0132AT/MT

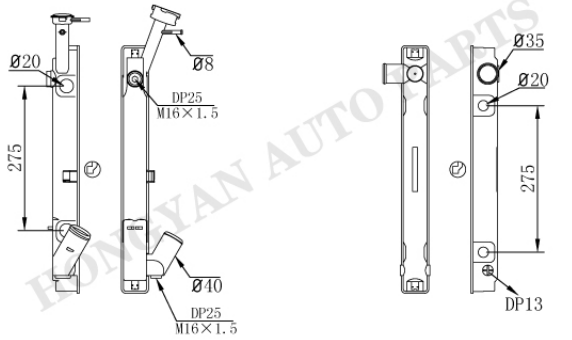

NI-0131AT/MT

Tank size :(R8×5×4×52×470)
OEM :
DPI :
NISSENS :
APPLICATION :

NI-0133AT/MT

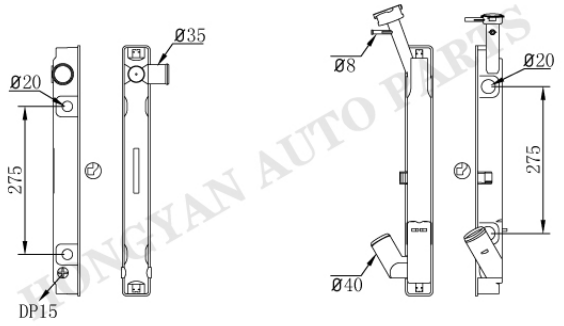

NI-0134AT/MT

Tank size :(R8×5×4×52×470)
OEM :
DPI :
NISSENS :
APPLICATION :

NI-0133AT/MT

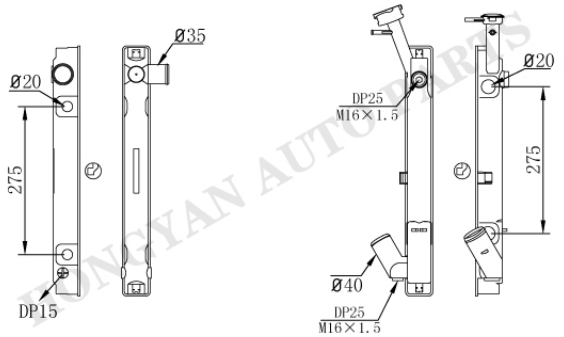

NI-0135AT/MT

Tank size :(R8×5×4×52×470)
OEM :
DPI :
NISSENS :
APPLICATION :

NISSAN/INFINITI

NI-0136

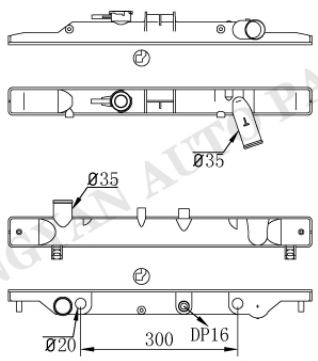

NI-0137AT/MT

Tank size :(R8×5×4×52×569)
OEM :
DPI :
NISSENS :
APPLICATION :
06- NISSAN URVAN 2.4L

NI-0138

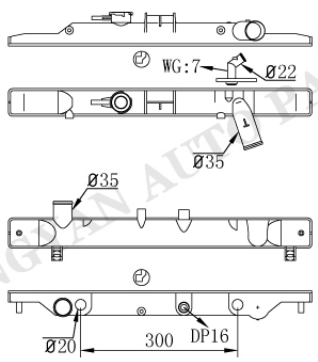

NI-0137AT/MT

Tank size :(R8×5×4×52×569)
OEM :
DPI :
NISSENS :
APPLICATION :
06- NISSAN URVAN 2.4L

NI-0139

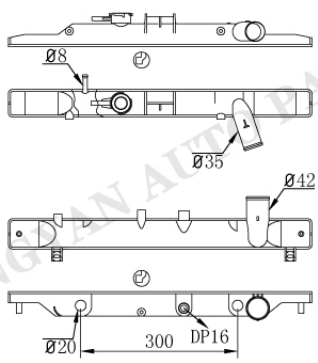

NI-0140AT/MT

Tank size :(R8×5×4×52×569)
OEM :
DPI :
NISSENS :
APPLICATION :
06- NISSAN URVAN 2.4L

NI-0141

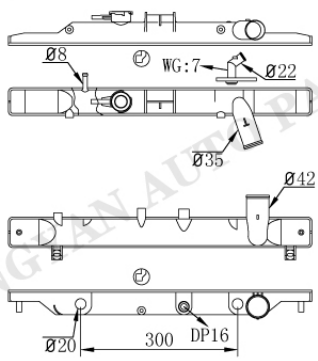

NI-0140AT/MT

Tank size :(R8×5×4×52×569)
OEM :
DPI :
NISSENS :
APPLICATION :
06- NISSAN URVAN 2.4L

HONGYAN AUTO PARTS

NISSAN/INFINITI

NI-0142

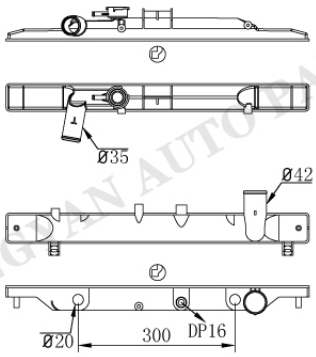

NI-0140AT/MT

Tank size :(R8×5×4×52×569)
OEM :
DPI :
NISSENS :
APPLICATION :
06- NISSAN URVAN 2.4L

NI-0139

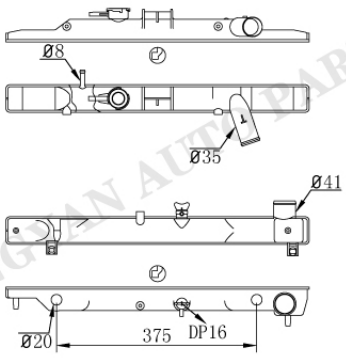

NI-0143AT/MT

Tank size :(R8×5×4×52×569)
OEM :
DPI :
NISSENS :
APPLICATION :
06- NISSAN URVAN 2.4L

NI-0144

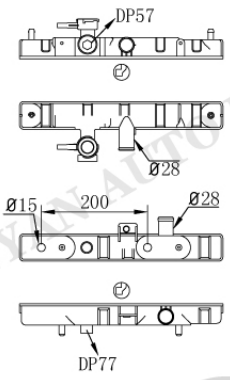

NI-0145AT/MT

Tank size :(R8×5×4×52×382)
OEM :214160EA005
DPI :
NISSENS :
APPLICATION :

NI-0144

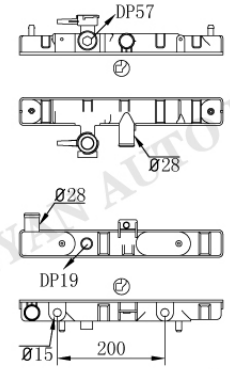

NI-0146AT/MT

Tank size :(R8×5×4×52×382)
OEM :2146045B00/21/72B00
DPI :
NISSENS :
APPLICATION :

HONGYAN AUTO PARTS

NISSAN/INFINITI

NI-0147

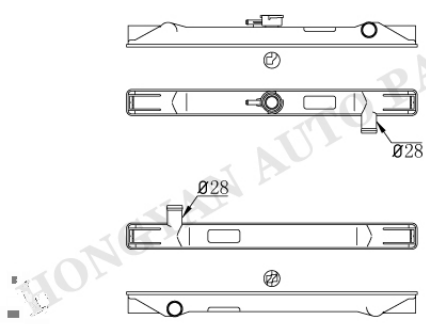

NI-0148

Tank size :(R10×4×5×49×546)
OEM :
DPI :
NISSENS :
APPLICATION :

NI-0149

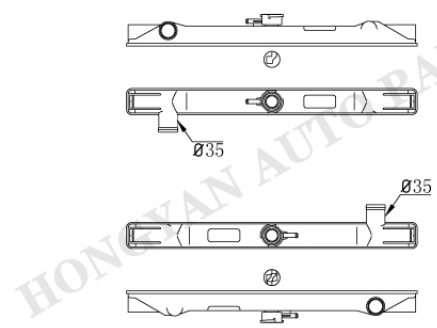

NI-0150

Tank size : (R10×4×5×49×546)
OEM :
DPI :
NISSENS :
APPLICATION :

NI-0151

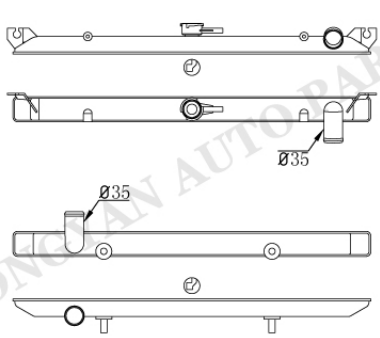

NI-0152

Tank size : (R9×5×4×46.7×671.5)
OEM :
DPI :
NISSENS :
APPLICATION :

NI-0153

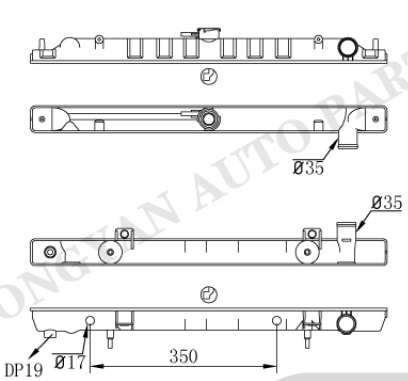

NI-0154AT/MT

Tank size :(R8×5×4×47×669)
OEM :2146070F00
DPI :1751
NISSENS :
APPLICATION :
95-98 NISSAN 240SX 2.4L

NI-46

HONGYAN AUTO PARTS

NISSAN/INFINITI

NI-0153

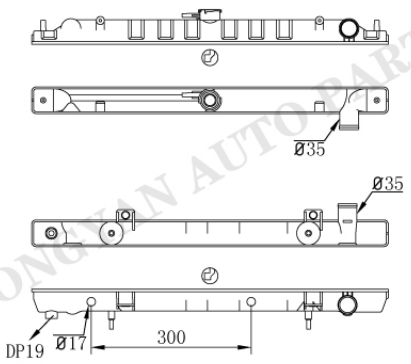

NI-0154-1AT

Tank size : (R8×5×4×47×669)
OEM :
DPI :
NISSENS :
APPLICATION :

NI-0155

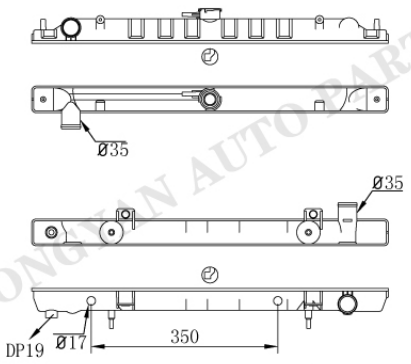

NI-0154AT/MT

Tank size : (R8×5×4×47×669)
OEM :
DPI :
NISSENS :
APPLICATION :

NI-0155

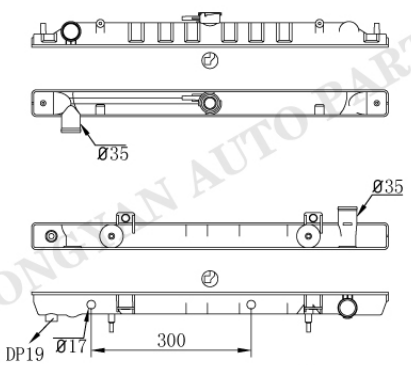

NI-0154-1AT

Tank size : (R8×5×4×47×669)
OEM :
DPI :
NISSENS :
APPLICATION :

NI-0156

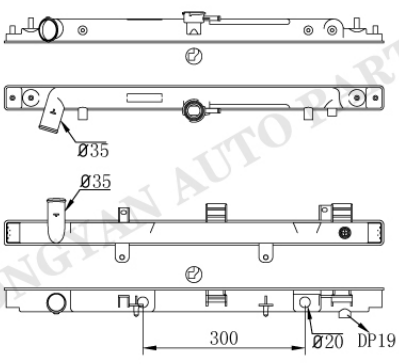

NI-0157AT/MT

Tank size : (R8.5×5×4×47×713)
OEM :
DPI :
NISSENS :
APPLICATION :

HONGYAN AUTO PARTS

NISSAN/INFINITI

NI-0156

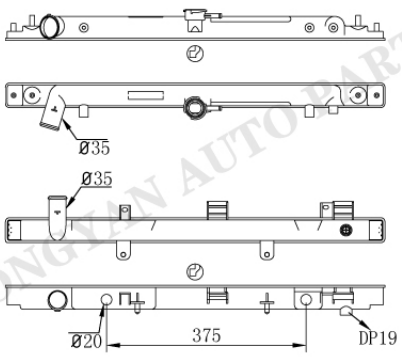

NI-0157-1AT

Tank size :(R8.5×5×4×47×713)
OEM :
DPI :
NISSENS :
APPLICATION :

NI-0156

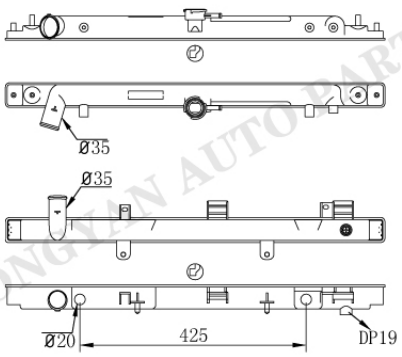

NI-0157-2AT

Tank size :(R8.5×5×4×47×713)
OEM :
DPI :
NISSENS :
APPLICATION :

NI-0158

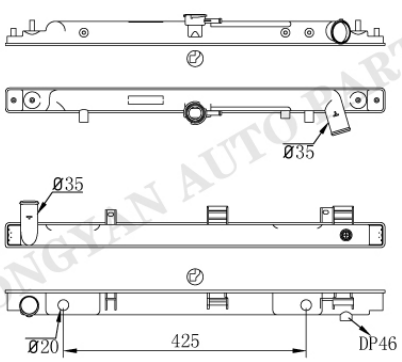

NI-0159AT/MT

Tank size :(R8.5×5×4.5×57×713)
OEM :21460EA215
DPI :2807
NISSENS :
APPLICATION :
05-14 NISSAN FRONTIER 4.0L
05-12 NISSAN PATHFINDER 4.0/5.6L
05-14 NISSAN XTERRA 4.0L
09-12 SUZUKI EQUATOR 4.0L

NI-0160

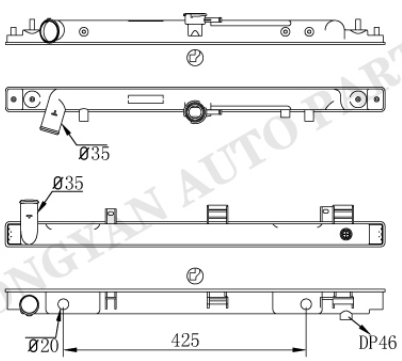

NI-0159AT/MT

Tank size :(R8.5×5×4.5×57×713)
OEM :21460EA005
DPI :2808
NISSENS :
APPLICATION :
05-14 NISSAN FRONTIER 2.5L
09-12 SUZUKI EQUATOR 2.5L

HONGYAN AUTO PARTS

NISSAN/INFINITI

NI-0161

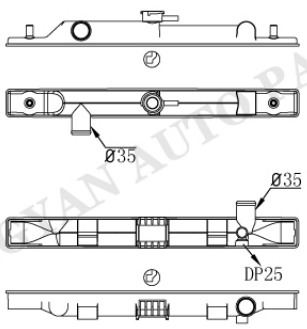

NI-0162

Tank size :(R8×5×4×52/56.5×546.5)
OEM :
DPI :
NISSENS :
APPLICATION :

NI-0163

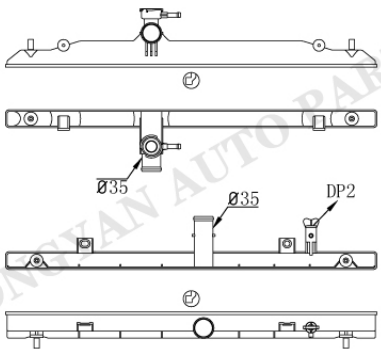

NI-0164

Tank size :(R7×4×5×33.5×698)
OEM :
DPI :
NISSENS :
APPLICATION :

NI-0165

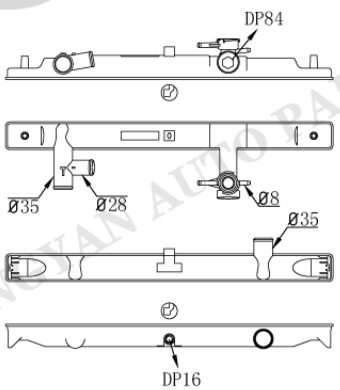

NI-0166

Tank size :(R8×5×4×52×613.5)
OEM :
DPI :
NISSENS :
APPLICATION :
09- NISSAN CIVILIAN BUS

NI-0167

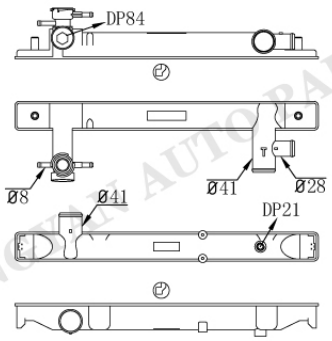

NI-0168

Tank size :(R8×5×4×52×546.5)
OEM :
DPI :
NISSENS :
APPLICATION :

HONGYAN AUTO PARTS

NISSAN/INFINITI

NI-0169

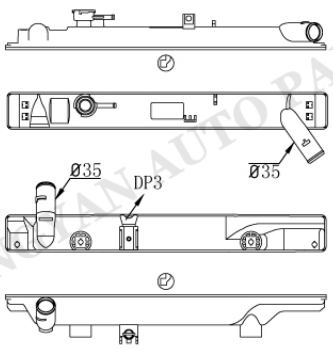

NI-0170

Tank size :(R9×4.5×4.5×69×602)
OEM :
DPI :
NISSENS :
APPLICATION :
06- NISSAN CABSTAR

NI-0171

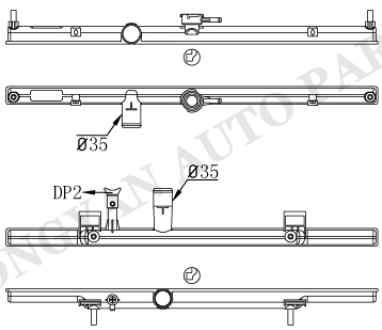

NI-0172

Tank size :(R4.5×4×5×33.5×698)
OEM :
DPI : 2998 13020
NISSENS :
APPLICATION :
07-12 NISSAN SENTRA 2.0/2.5L

NI-0173

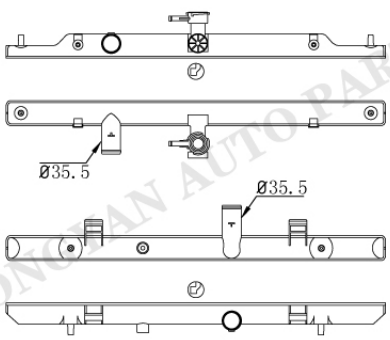

NI-0174

Tank size :(R8.5×5×4×47×713)
OEM :214103LM0A
DPI :13405
NISSENS :
APPLICATION :
13-15 NISSAN NV200 2.0L

NI-0175AT/MT

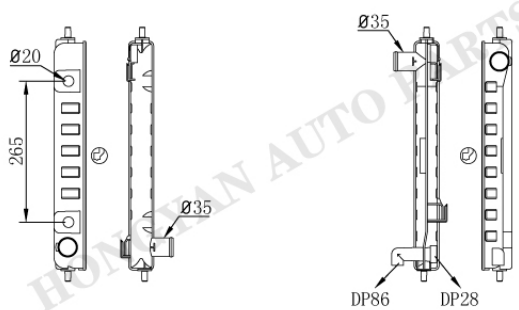

NI-0176

Tank size :(R8.5×4.5×4.5×47×430)
OEM :21460JA00A
DPI :2988
NISSENS :
APPLICATION :
07-12 NISSAN ALTIMA 2.5/3.5L
09-12 NISSAN MAXIMA 3.5L

HONGYAN AUTO PARTS

NISSAN/INFINITI

NI-0177AT/MT

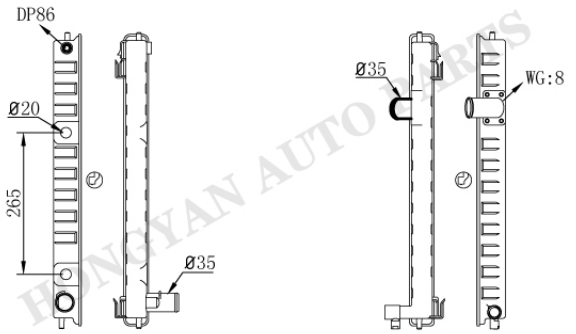

NI-0178

Tank size :(R7×5×4.5×46.5×548)
OEM :214601CB0A 214601BA0A
DPI :13078 13079
NISSENS :
APPLICATION :
09-11 INFINITI FX35 3.5L
09-11 INFINITI FX50 5.0L

NI-0179AT/MT

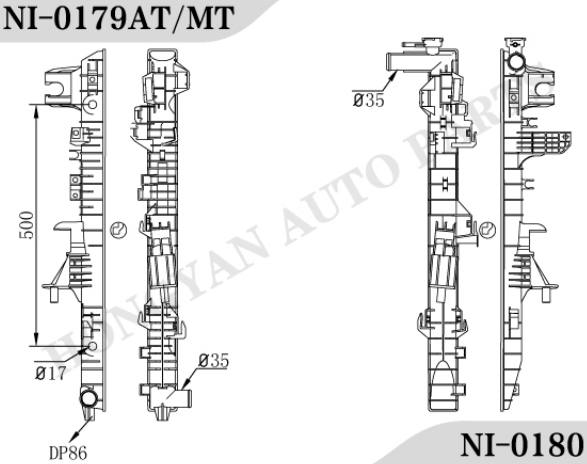

NI-0180

Tank size :(R5×4×5×60.5×749)
OEM :
DPI :
NISSENS :
APPLICATION :
10- NISSAN PATROL
10- INFINITI RX56

NI-0181AT/MT

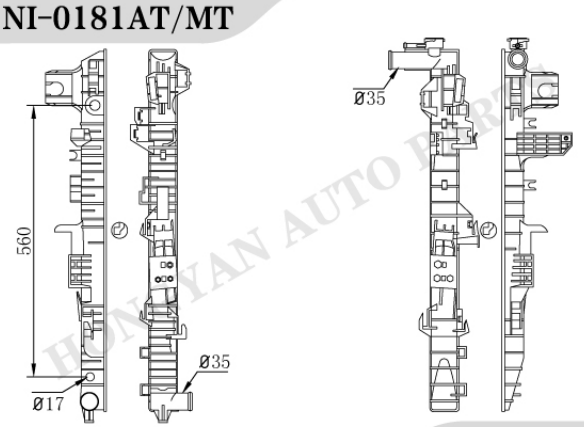

NI-0182

Tank size :(R5×4×5×60.5×749)
OEM :
DPI :
NISSENS :
APPLICATION :

NI-0183

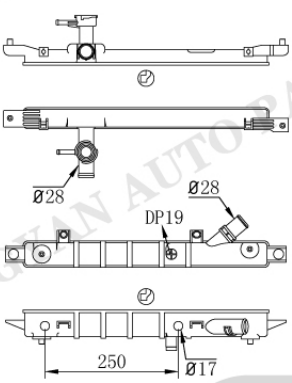

NI-0184AT/MT

Tank size :(R9×4.5×5×39.5/49.5×462)
OEM :
DPI :
NISSENS :
APPLICATION :

HONGYAN AUTO PARTS

NISSAN/INFINITI

NI-0185

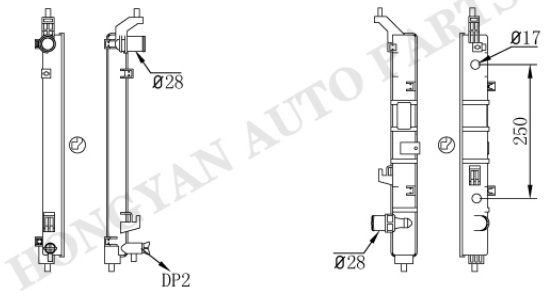

NI-0186AT/MT

Tank size :(R9×4.5×5×39.5/49.5×418)
OEM :
DPI :
NISSENS :
APPLICATION :

NI-0187

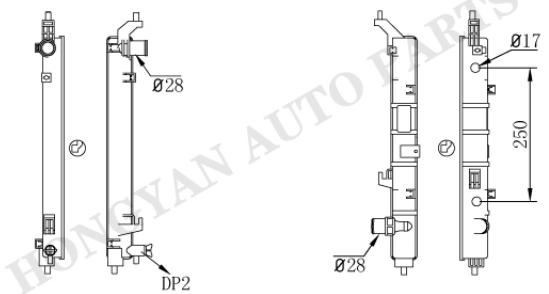

NI-0186AT/MT

Tank size :(R9×4.5×5×49.5×418)
OEM :
DPI :
NISSENS :
APPLICATION :

NI-0188

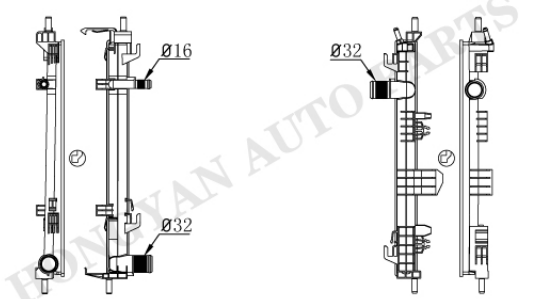

NI-0189

Tank size :(R5.5×4×5.5×41.5×444)
OEM :21410JX51A
DPI :
NISSENS :68752
APPLICATION :
08- NISSAN NV200 1.5L

NI-0190

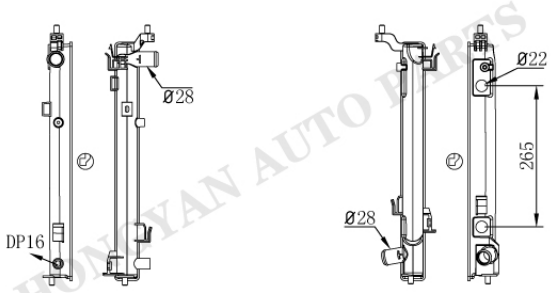

NI-0191AT/MT

Tank size :(R8×5×4.5×46.3×448)
OEM :214101HS3A
DPI :13260 13261
NISSENS :
APPLICATION :
12-15 NISSAN VERSA 1.6/1.8L
12-15 NISSAN TIIDA 1.8L

HONGYAN AUTO PARTS

NI-52

NISSAN/INFINITI

NI-0192

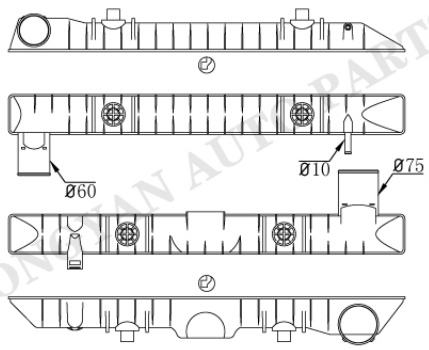

NI-0193

Tank size :(R9×5×4.5×75×745)
OEM :
DPI :
NISSENS :
APPLICATION :
NISSAN UD

NI-0194

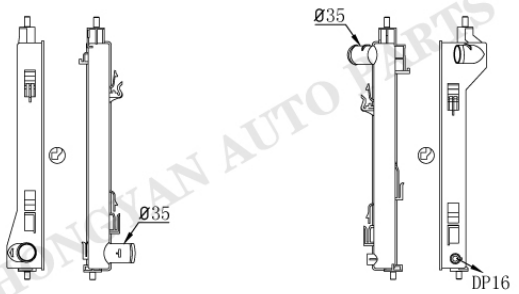

NI-0195

Tank size :(R8.5×5×4.5×46.5×430)
OEM :214103SH0A NI3010225
DPI :13365
NISSENS :
APPLICATION :
13-14 NISSAN SENTRA 1.8L

NI-0196

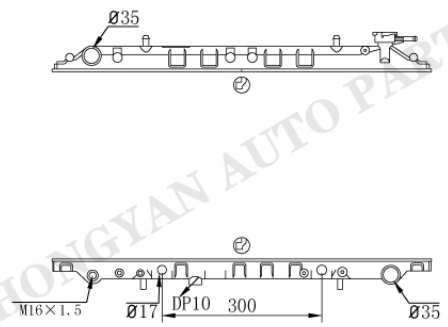

NI-0197AT/MT

Tank size :(R8×5×4×47×713)
OEM :
DPI :
NISSENS :
APPLICATION :

NI-0198AT/MT

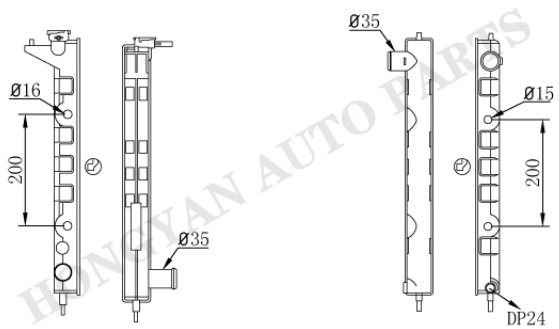

NI-0199AT/MT

Tank size :(R8.5×5×4×52×482)
OEM :
DPI :2053
NISSENS :
APPLICATION :
94-96 INFINITI Q45 4.5L

HONGYAN AUTO PARTS

NISSAN/INFINITI

NI-0160

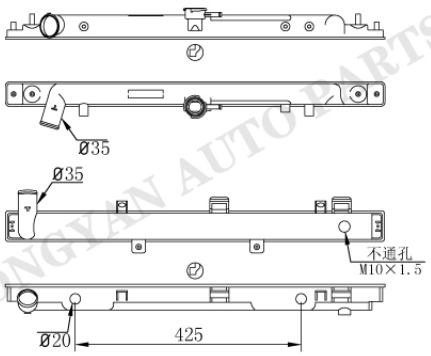

NI-0200AT/MT

Tank size :(R8.5×5×4.5×57×713)
OEM :
DPI :
NISSENS :
APPLICATION :

NI-0201

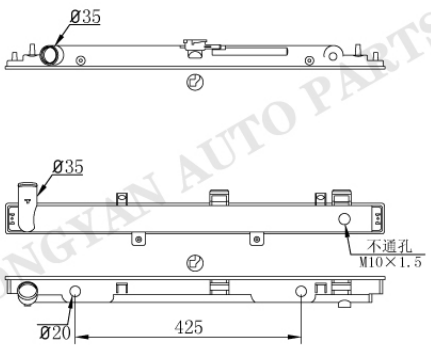

NI-0200AT/MT

Tank size :(R8.5×5×4.5×57×713)
OEM :
DPI :
NISSENS :
APPLICATION :

NI-0202

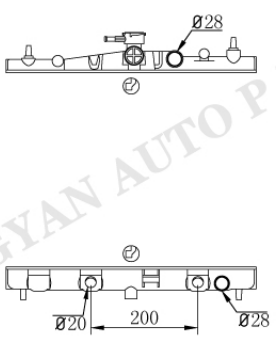

NI-0203AT/MT

Tank size :(R8.5×4.8×4.7×36/46.5×470)
OEM :
DPI :
NISSENS :
APPLICATION :

NI-0202

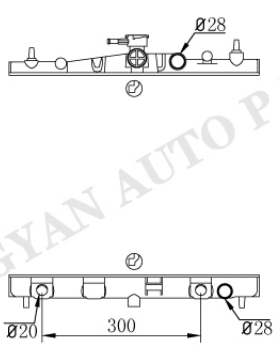

NI-0203-1AT

Tank size :(R8.5×4.8×4.7×36/46.5×470)
OEM :
DPI :
NISSENS :
APPLICATION :

HONGYAN AUTO PARTS

NISSAN/INFINITI

NI-0202

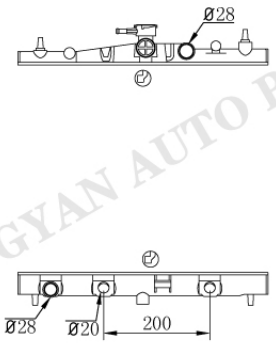

NI-0204AT/MT

Tank size :(R8.5×4.8×4.7×36/46.5×470)
OEM :
DPI :
NISSENS :
APPLICATION :

NI-0205

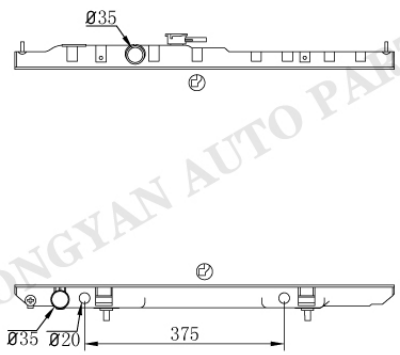

NI-0206AT/MT

Tank size :(R8×5×4.5×47×713)
OEM :
DPI :
NISSENS :
APPLICATION :
07- NISSAN SUNNY
07- NISSAN SENTRA

NI-0207

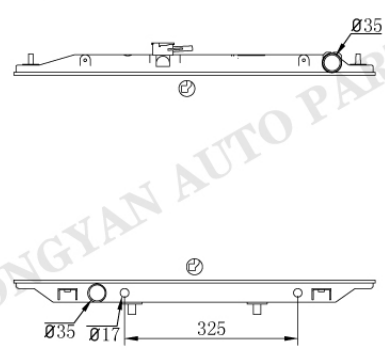

NI-0208AT/MT

Tank size :(R8.5×5×6×48×679)
OEM :214107F000
DPI :
NISSENS :68708A
APPLICATION :
96- NISSAN TERRANO 2.7L

NI-0207

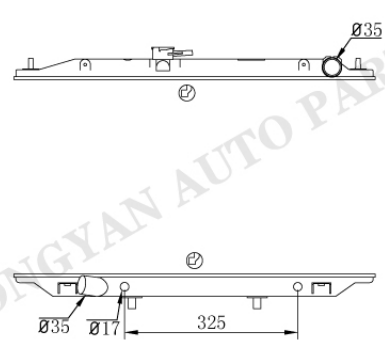

NI-0209AT/MT

Tank size :(R8.5×5×6×48×679)
OEM :
DPI :
NISSENS :
APPLICATION :
96- NISSAN TERRANO 2.7L

HONGYAN AUTO PARTS

NISSAN/INFINITI

NI-0210

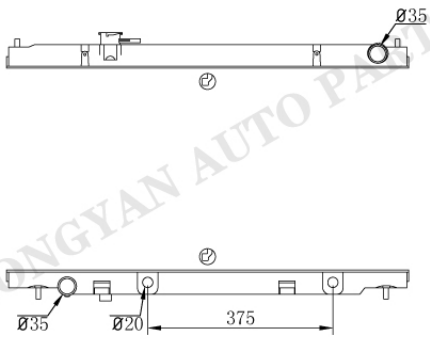

NI-0211AT/MT

Tank size :(R8.5×5×4×47×757.5)
OEM :
DPI :2780
NISSENS :
APPLICATION :
06-10 INFINITI M35 3.5L

NI-0212

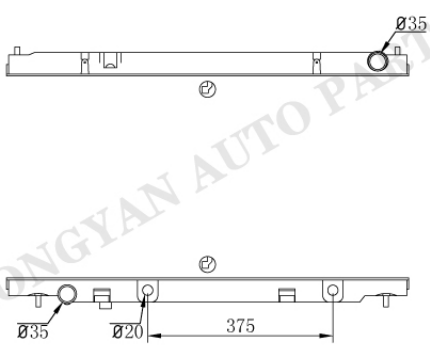

NI-0211AT/MT

Tank size :(R8.5×5×4×47×757.5)
OEM :
DPI :13012
NISSENS :
APPLICATION :
06-10 INFINITI M45 4.5L

NI-0213

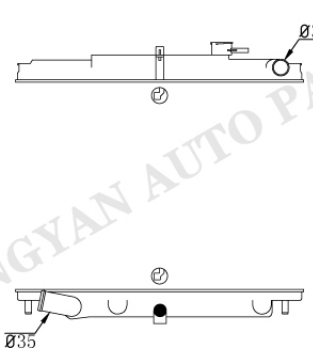

NI-0214

Tank size :(R9×5×5×63×542)
OEM :
DPI :
NISSENS :
APPLICATION :
95-99 NISSAN ATLAS

NI-0215

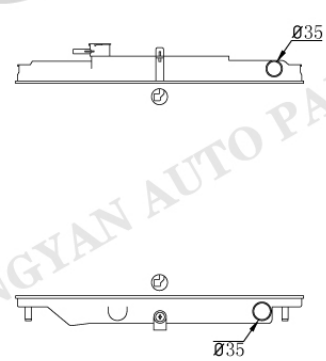

NI-0216

Tank size :(R9×5×5×63×542)
OEM :
DPI :
NISSENS :
APPLICATION :
95-99 NISSAN ATLAS

HONGYAN AUTO PARTS

NISSAN/INFINITI

NI-0217

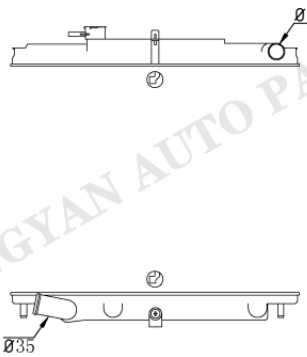

NI-0218

Tank size :(R9×5×5×63×542)
OEM :
DPI :
NISSENS :
APPLICATION :
95-99 NISSAN ATLAS

NI-0219AT/MT

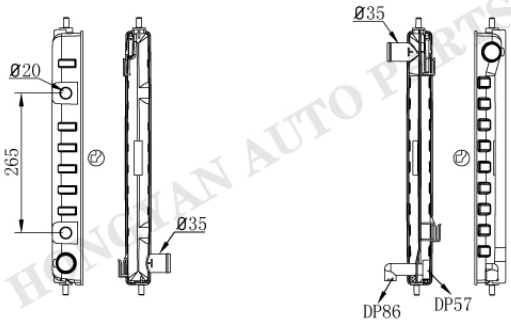

NI-0220

Tank size :(R8.5×5×4×46.5×481)
OEM :
DPI :13039
NISSENS :
APPLICATION :
08-14 NISSAN MURANO 3.5L
11-14 NISSAN QUEST 3.5L

NI-0221

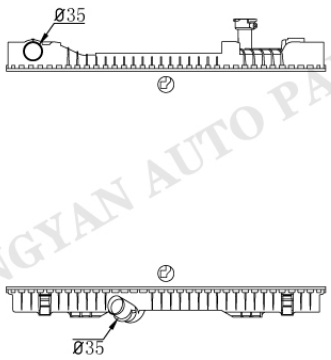

NI-0222

Tank size :(R5.5×4.5×5×57×600)
OEM :
DPI :
NISSENS :
APPLICATION :
06- NISSAN CABSTAT

NI-0223

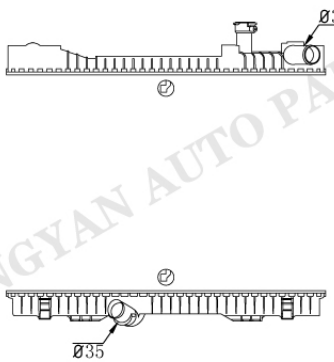

NI-0222

Tank size :(R5.5×4.5×5×57×600)
OEM :
DPI :
NISSENS :
APPLICATION :
06- NISSAN CABSTAT

HONGYAN AUTO PARTS

NISSAN/INFINITI

NI-0224

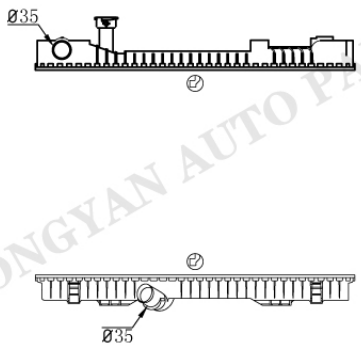

NI-0222

Tank size :(R5.5×4.5×5×57×600)
OEM :
DPI :
NISSENS :
APPLICATION :
06- NISSAN CABSTAT

NI-0225

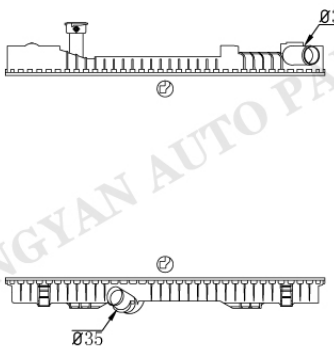

NI-0222

Tank size :(R5.5×4.5×5×57×600)
OEM :
DPI :
NISSENS :
APPLICATION :
06- NISSAN CABSTAT

NI-0226AT/MT

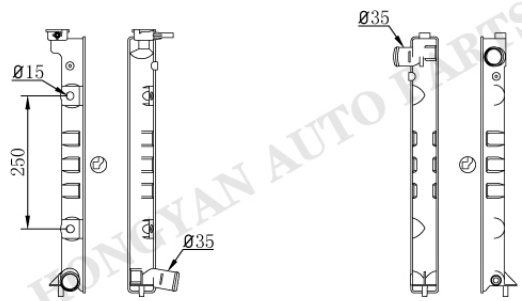

NI-0227

Tank size :(R8×5×4×52×481)
OEM :
DPI :1151 1139
NISSENS :
APPLICATION :
89-96 NISSAN 300ZX 3.0L

NI-0228AT/MT

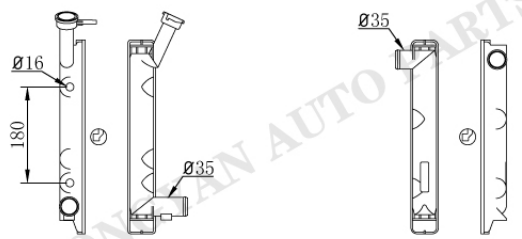

NI-0229

Tank size :(R9.5×4.2×5.1×52×364)
OEM :
DPI :126 213
NISSENS :
APPLICATION :
88-89 NISSAN PULSAR 1.8L

HONGYAN AUTO PARTS

NISSAN/INFINITI

NI-0228-1AT

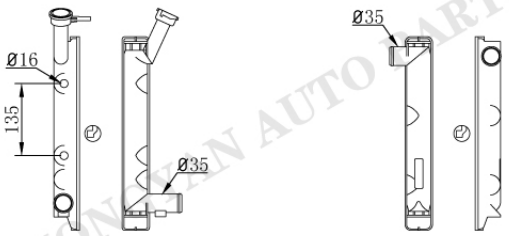

NI-0229

Tank size :(R9.5×4.2×5.1×52×364)
OEM :
DPI :126 213
NISSENS :
APPLICATION :
88-89 NISSAN PULSAR 1.8L

NI-0230AT/MT

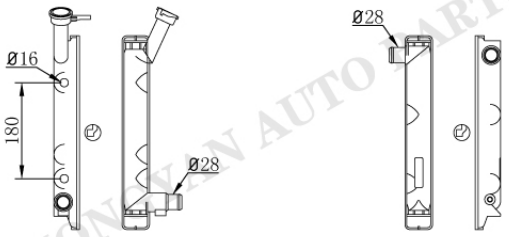

NI-0231

Tank size :(R9.5×4.2×5.1×52×364)
OEM :
DPI :788 1261
NISSENS :
APPLICATION :
89-90 NISSAN PULSAR 1.6L
89-90 NISSAN SENTRA 1.6L

NI-0230-1AT

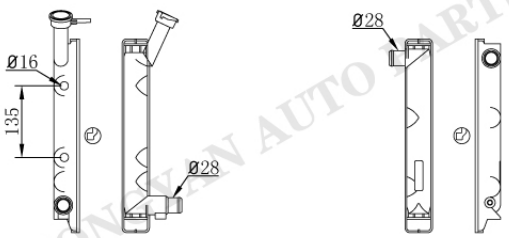

NI-0231

Tank size :(R9.5×4.2×5.1×52×364)
OEM :
DPI :788 1261
NISSENS :
APPLICATION :
89-90 NISSAN PULSAR 1.6L
89-90 NISSAN SENTRA 1.6L

NI-0232

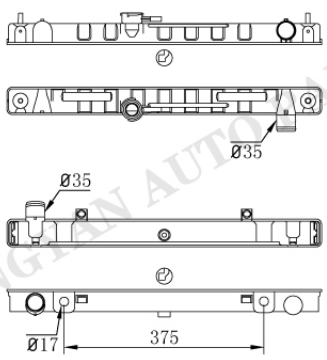

NI-0233AT/MT

Tank size :(R8.5×5×4×52×591)
OEM :
DPI :
NISSENS :
APPLICATION :

HONGYAN AUTO PARTS

NISSAN/INFINITI

NI-0234

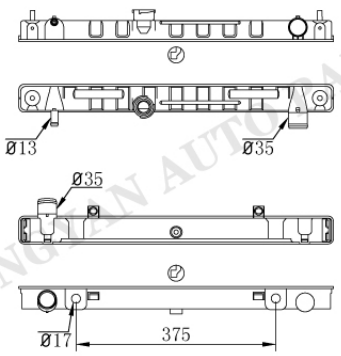

NI-0233AT/MT

Tank size :(R8.5×5×4×52×591)
OEM :
DPI :
NISSENS :
APPLICATION :

NI-0235

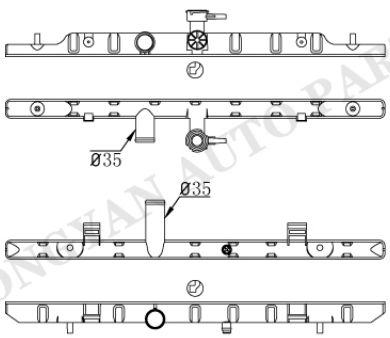

NI-0236

Tank size :(R8.5×5×4×36×713)
OEM :
DPI :
NISSENS :
APPLICATION :

NI-0235

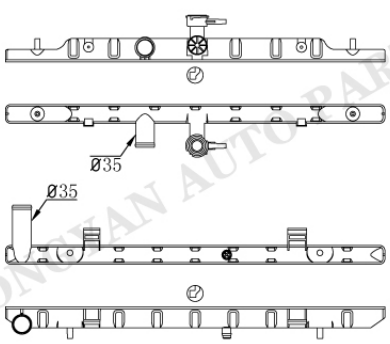

NI-0237

Tank size :(R8.5×5×4×36×713)
OEM :
DPI :
NISSENS :
APPLICATION :

NI-0238

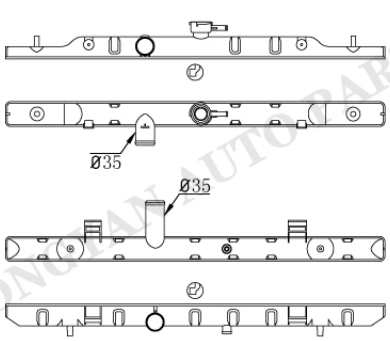

NI-0239

Tank size :(R8×5×4×47×713)
OEM :
DPI :13047
NISSENS :
APPLICATION :
08-13 NISSAN ROGUE 2.5L

HONGYAN AUTO PARTS

NISSAN/INFINITI

NI-0240

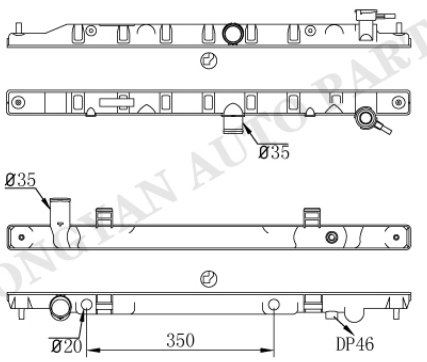

NI-0057AT/MT

Tank size :(R8×5×4×47×758)
OEM :
DPI :
NISSENS :
APPLICATION :

NI-0241

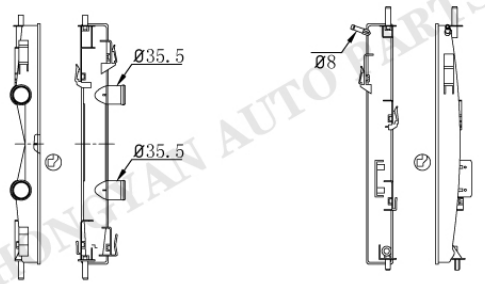

NI-0242

Tank size :(R5×4×5×50×452)
OEM :
DPI :
NISSENS :
APPLICATION :
07- NISSAN QASHAQL 2.0L

NI-0241-1

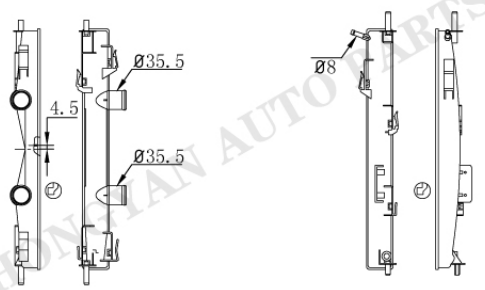

NI-0242

Tank size :(R5×4×5×50×452)
OEM :
DPI :
NISSENS :
APPLICATION :
07- NISSAN QASHAQL 2.0L

NI-0243

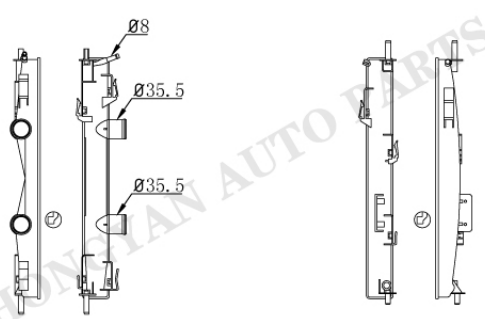

NI-0244

Tank size :(R5×4×5×50×452)
OEM :
DPI :
NISSENS :
APPLICATION :
07- NISSAN QASHAQL 2.0L

HONGYAN AUTO PARTS

NISSAN/INFINITI

NI-0243-1

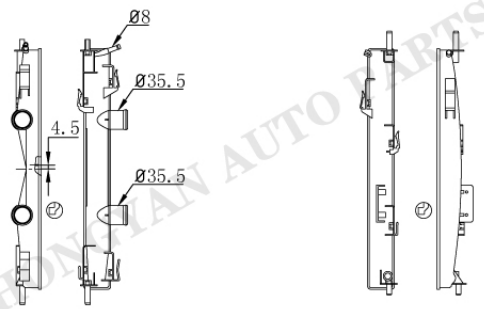

NI-0244

Tank size :(R5×4×5×50×452)
OEM :
DPI :
NISSENS :
APPLICATION :
07- NISSAN QASHAQL 2.0L

NI-0245

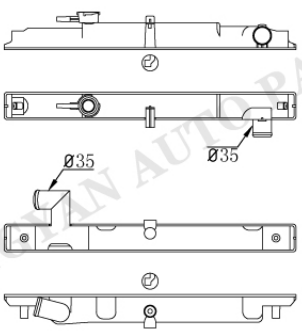

NI-0246

Tank size :(R8.5×5×4×52.5×548)
OEM :
DPI :
NISSENS :
APPLICATION :
95-99 NISSAN ATLAS

NI-0247

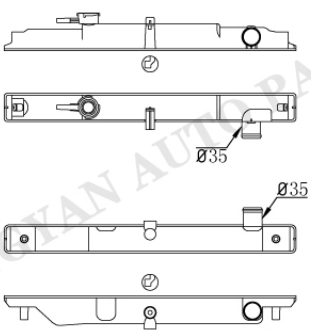

NI-0248

Tank size :(R8.5×5×4×52.5×548)
OEM :
DPI :
NISSENS :
APPLICATION :
95-99 NISSAN ATLAS

NI-0247

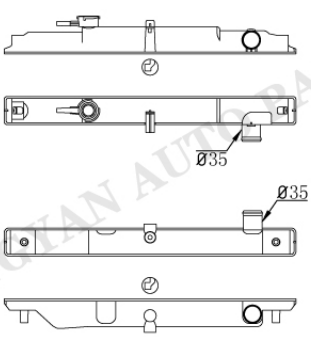

NI-0248-1

Tank size :(R8.5×5×4×52.5×548)
OEM :
DPI :
NISSENS :
APPLICATION :
95-99 NISSAN ATLAS

HONGKAN AUTO PARTS

NISSAN/INFINITI

NI-0249

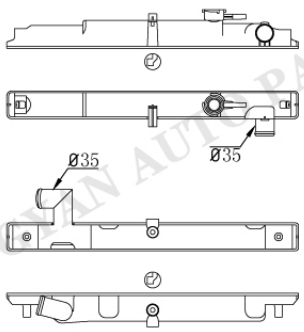

NI-0250

Tank size :(R8.5×5×4×52.5×548)
OEM :
DPI :
NISSENS :
APPLICATION :
95-99 NISSAN ATLAS

NI-0251

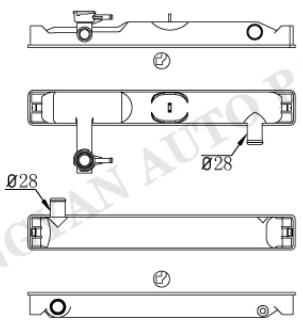

NI-0252

Tank size :(R10×5×5×66×502)
OEM :
DPI :
NISSENS :
APPLICATION :

NI-0253

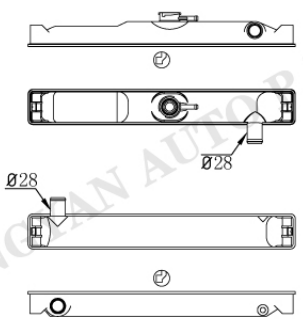

NI-0252

Tank size :(R10×5×5×66×502)
OEM :
DPI :
NISSENS :
APPLICATION :

NI-0254

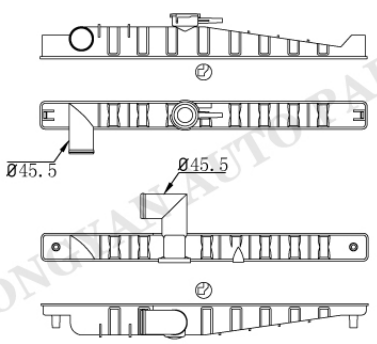

NI-0255

Tank size :(R8×5×4×52×613.5)
OEM :
DPI :
NISSENS :
APPLICATION :

NISSAN/INFINITI

NI-0256

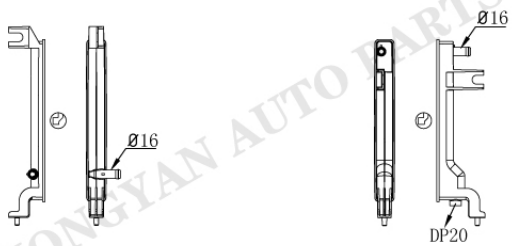

NI-0257

Tank size :(R8×5×4.5×36.6×308)
OEM :
DPI :
NISSENS :
APPLICATION :

NI-0258

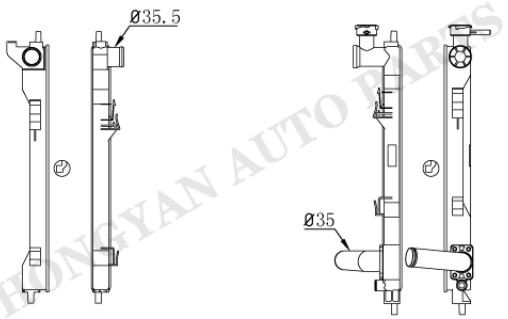

NI-0259

Tank size :(R8.5×5×4.5×36×464)
OEM :
DPI :
NISSENS :
APPLICATION :
07-10 NISSAN LAFESTA(MPV) 2.0L

NI-0260

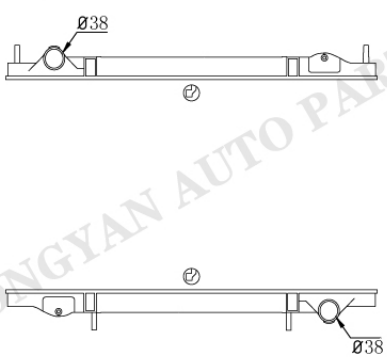

NI-0261

Tank size :(R9×4.5×5.5×50×697.5)
OEM :
DPI :
NISSENS :
APPLICATION :

NI-0262



NI-0263

Tank size :(R8.5×4.5×5×47×448)
OEM :
DPI :
NISSENS :
APPLICATION :

HONGYAN AUTO PARTS

NISSAN/INFINITI

NI-0264

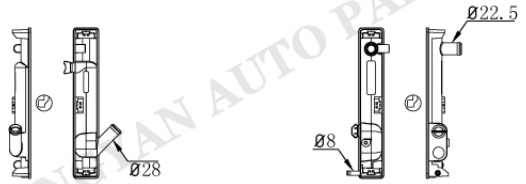

NI-0265

Tank size :(R8.5×5×4×46.5×283)
OEM :
DPI :
NISSENS :
APPLICATION :
04- NISSAN URVAN

NI-0266

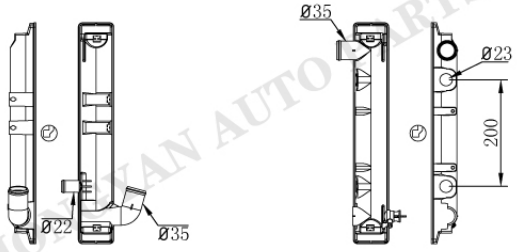

NI-0267AT/MT

Tank size :(R8.5×4.8×4×65×415)
OEM :
DPI :
NISSENS :
APPLICATION :
04- NISSAN URVAN

NI-0268

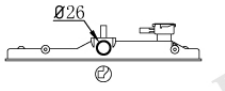

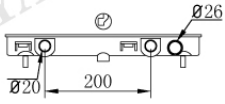

NI-0269AT/MT

Tank size :(R7.5×5×4×35.8/47×371.5)
OEM :
DPI :
NISSENS :
APPLICATION :

NI-0270

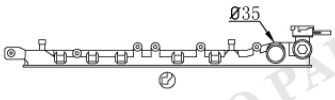

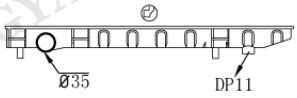

NI-0271

Tank size :(R8×5×4.5×35×547)
OEM :
DPI :
NISSENS :
APPLICATION :

HONGYAN AUTO PARTS

NISSAN/INFINITI

NI-0272

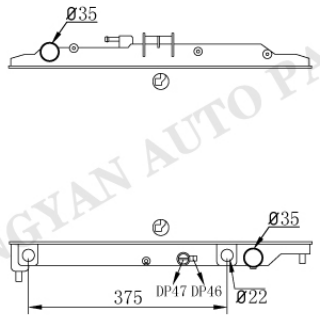

Tank size :(R8×5×4×52×569)
OEM :
DPI :
NISSENS :
APPLICATION :

NI-0273AT/MT

NI-0274

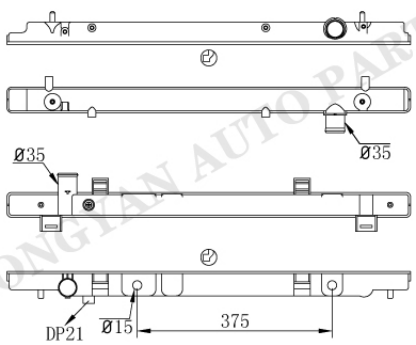

Tank size :(R8×5×4×47×758)
OEM :
DPI :2999 13038
NISSENS :
APPLICATION :
07-09 NISSAN 350Z

NI-0066AT/MT

NI-0275

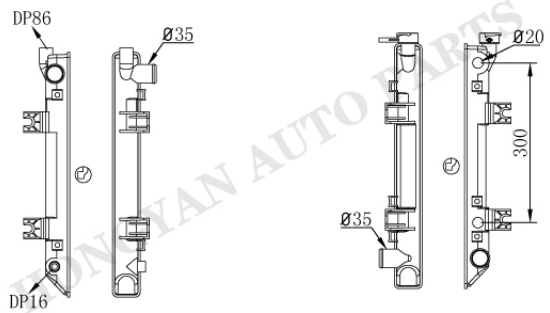

Tank size :(R9.5×5×4.5×52×460)
OEM :
DPI :
NISSENS :
APPLICATION :
NISSAN LIFT

NI-0276AT/MT

NI-0277AT/MT

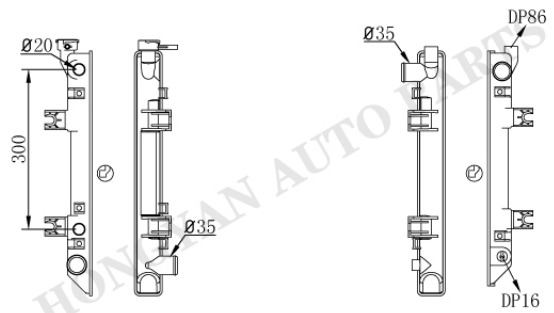

Tank size :(R9.5×5×4.5×52×460)
OEM :
DPI :
NISSENS :
APPLICATION :
NISSAN LIFT

NI-0278

HONGYAN AUTO PARTS

NISSAN/INFINITI

NI-0279

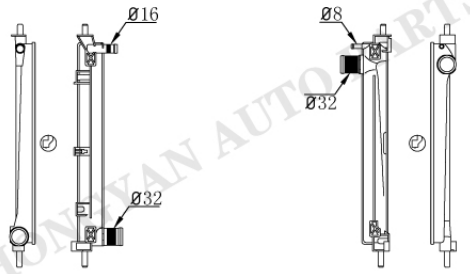

NI-0280

Tank size :(R4.5×4×5.5×50×378.5)
OEM :21410AY602 21410BC510
DPI :
NISSENS :
APPLICATION :
02- NISSAN MICRA 1.5L
06- NISSAN NOTE 1.5L

NI-0281

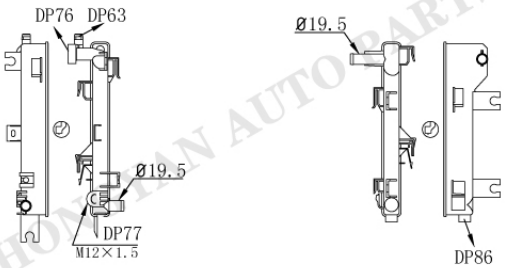

NI-0282

Tank size :(R8.5×5×4.5×36×328)
OEM :214103NF0A
DPI :13442
NISSENS :68773
APPLICATION :
10- NISSAN LEAF

NI-0283

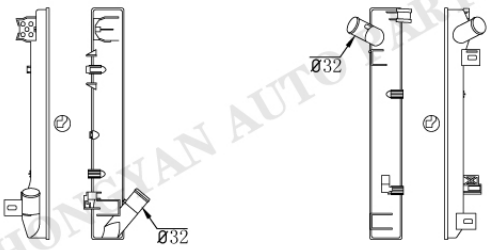

NI-0284

Tank size :(R5×4.2×5×60.5×434)
OEM :
DPI :
NISSENS :67287
APPLICATION :
02- NISSAN INTERSTAR X70
RENAULT MASTER 2.5D

NI-0285

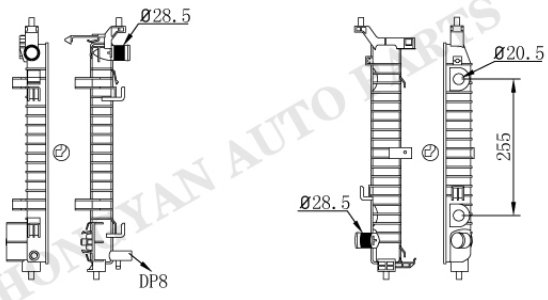

NI-0286AT/MT

Tank size :(R5×4×4.5×41.5/56×413)
OEM :
DPI :
NISSENS :
APPLICATION :
13- NISSAN SUNNY

HONGYAN AUTO PARTS

NISSAN/INFINITI

NI-0287

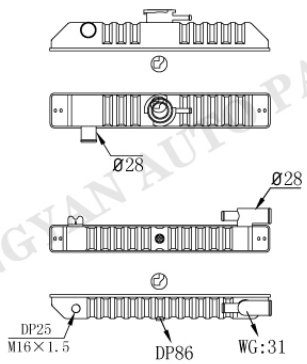

NI-0288

Tank size :(R8×5×5×65/51×413)
OEM :
DPI :
NISSENS :
APPLICATION :
NISSAN SUNNY B11

NI-0289

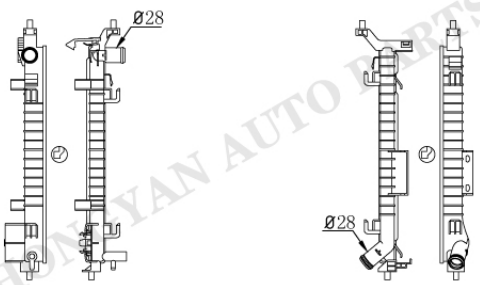

NI-0290

Tank size :(R5.5×4×5.5×32×410)
OEM :
DPI :
NISSENS :
APPLICATION :
NISSAN SUNNY

NI-0291

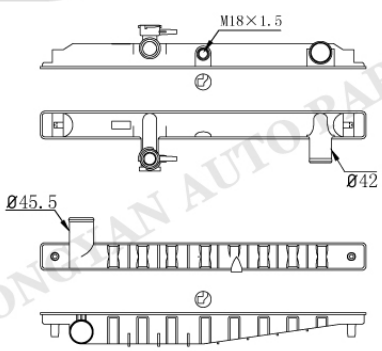

NI-0127

Tank size :(R8×5×4×52×613.5)
OEM :
DPI :
NISSENS :
APPLICATION :
UD CONDOR

NI-0292

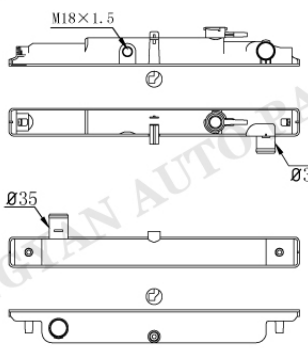

NI-0293

Tank size :(R8.5×5×4×52.5/57×548)
OEM :
DPI :
NISSENS :
APPLICATION :
ATLAS

HONGYAN AUTO PARTS

NISSAN/INFINITI

NI-0241

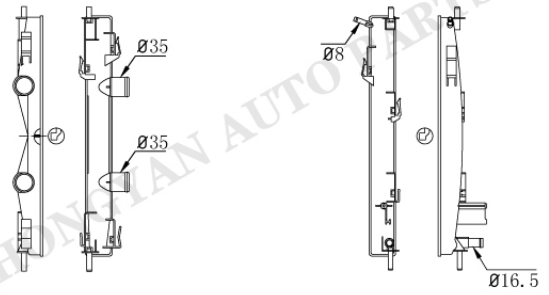

NI-0294

Tank size :(R5×4×5×50×452)
OEM :
DPI :
NISSENS :
APPLICATION :
NISSAN QASHAQI

NI-0295

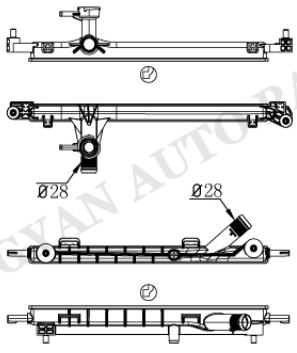

NI-0296

Tank size :(R5.5×4×5.5×32×450)
OEM :2114101HCIA
DPI :
NISSENS :
APPLICATION :
NISSAN MICRA

NI-0297

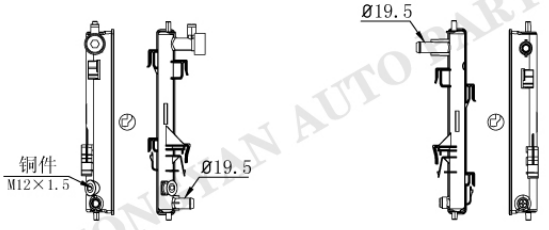

NI-0298

Tank size :(R8.5×4.5×5×36×349)
OEM :
DPI :
NISSENS :
APPLICATION :
11-12 NISSAN LEAF

NI-0299

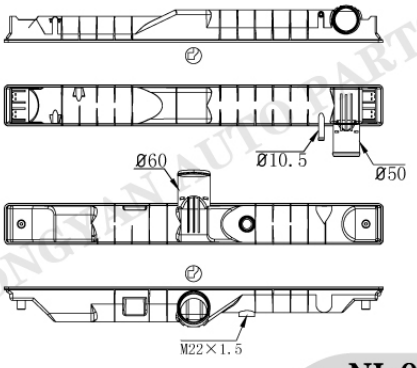

NI-0300

Tank size :(R8.5×5.5×4.8×75×712)
OEM :2140003Z65/70 2140004Z79
DPI :
NISSENS :
APPLICATION :
UD

NISSAN/INFINITI

NI-0301

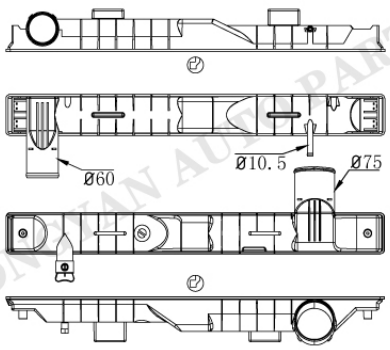

NI-0302

Tank size :(R8.5×5.5×4.8×75×712)
OEM :2140003Z79 2140004Z05/07/14
DPI :
NISSENS :
APPLICATION :
UD

NI-0303

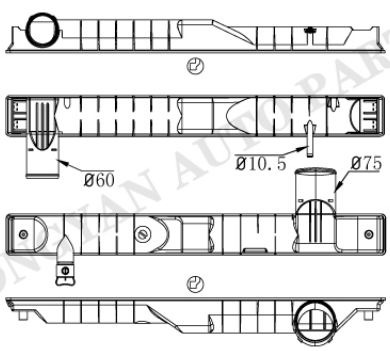

NI-0304

Tank size :(R8.5×5.5×4.8×75×712)
OEM :2140003Z01/04
DPI :
NISSENS :
APPLICATION :
UD

NI-0305

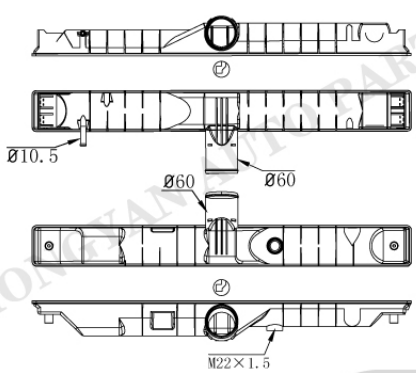

NI-0300

Tank size :(R8.5×5.5×4.8×75×712)
OEM :
DPI :
NISSENS :
APPLICATION :
UD

NI-0305

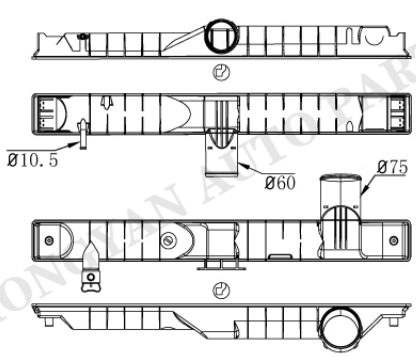

NI-0306

Tank size :(R8.5×5.5×4.8×75×712)
OEM :
DPI :
NISSENS :
APPLICATION :
UD

NISSAN/INFINITI

NI-0303

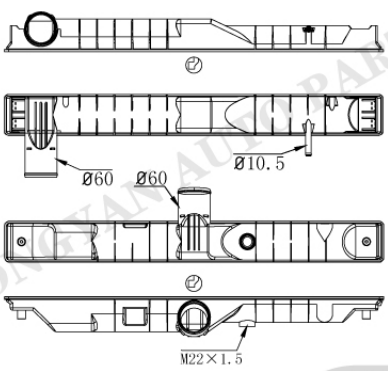

NI-0300

Tank size :(R8.5×5.5×4.8×75×712)
OEM :
DPI :
NISSENS :
APPLICATION :
UD

NI-0303

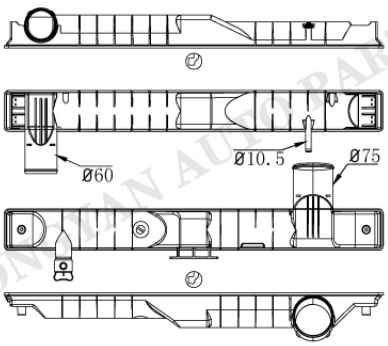

NI-0306

Tank size :(R8.5×5.5×4.8×75×712)
OEM :
DPI :
NISSENS :
APPLICATION :
UD

NI-0303

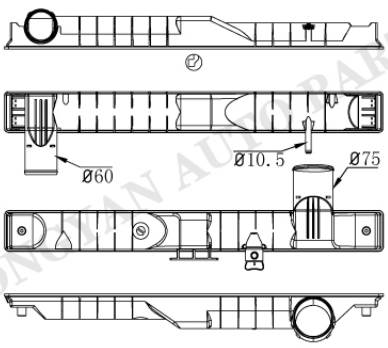

NI-0307

Tank size :(R8.5×5.5×4.8×75×712)
OEM :
DPI :
NISSENS :
APPLICATION :
UD

NI-0308AT/MT

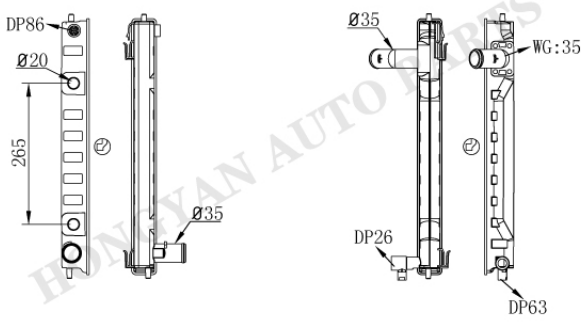

NI-0309

Tank size :(R8×5×4×46.5×481)
OEM :214601MA0A
DPI :13284
NISSENS :
APPLICATION :
11-13 INFINITI M37 3.7L
14-15 INFINITI Q70 3.7L

NISSAN/INFINITI

NI-0310

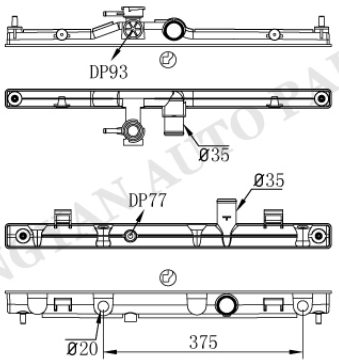

NI-0311AT/MT

Tank size :(R8×5×4×36/47×613.5)
OEM :21410JX00A 21460JX10A
DPI :
NISSENS :67369
APPLICATION :
09- NV200 VANETTE

NI-0312

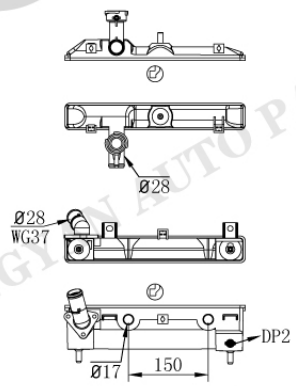

NI-0313AT/MT

Tank size :(R9.5×4.5×5×50×339)
OEM :214006A0A4/5/6 MR597539/51
DPI :
NISSENS :
APPLICATION :
05- NISSAN OTTI

NI-0314

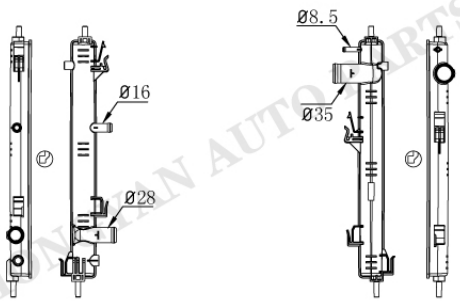

NI-0315

Tank size :(R8×4.8×4.5×47×448)
OEM :214101KK1A
DPI :
NISSENS :606119
APPLICATION :
10- NISSAN JUKE

NI-0316

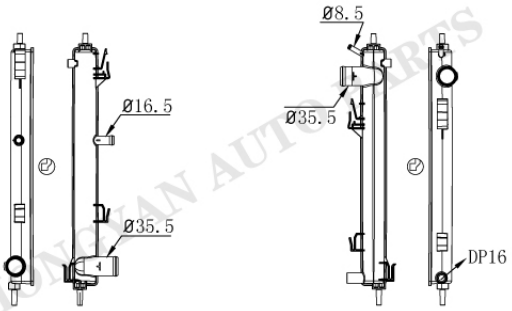

NI-0317

Tank size :(R8×4.8×4.5×47×448)
OEM :214101FE0B
DPI :
NISSENS :68746
APPLICATION :
10- NISSAN JUKE 1.5 D

HONGYAN AUTO PARTS

NI-72

NISSAN/INFINITI

NI-0318

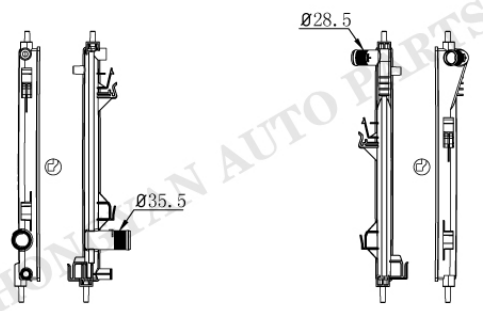

NI-0319

Tank size :(R7×4.5×5×31.5×441.5)
OEM :214103ZU0A
DPI :
NISSENS :606120
APPLICATION :
10- NISSAN JUKE

NI-0320

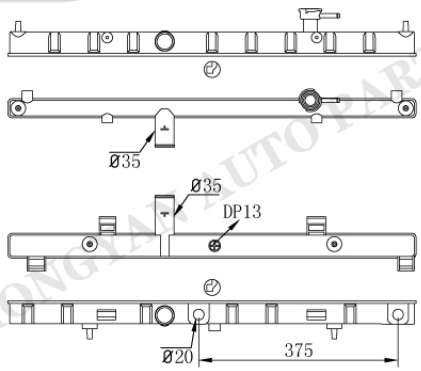

NI-0321AT/MT

Tank size :(R8×4.5×5×36/47×767.5)
OEM :214604BA0A
DPI :13431
NISSENS :
APPLICATION :
14-15 NISSAN ROGUE 2.5L

NI-0139

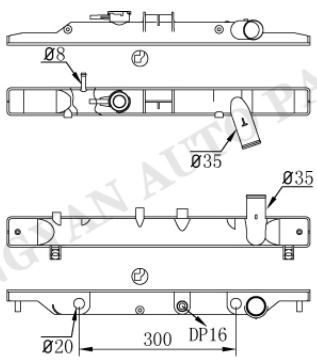

NI-0322AT/MT

Tank size :(R8×5×4×52×569)
OEM :
DPI :
NISSENS :
APPLICATION :
06- NISSAN URVAN 2.4L

NI-0323

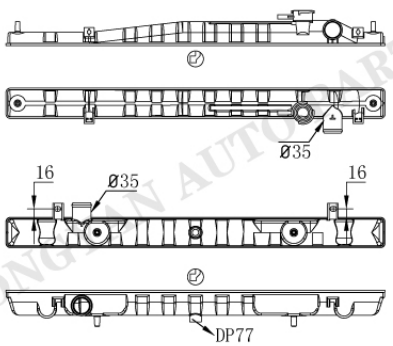

NI-0324

Tank size :(R8.5×5×4×57×713)
OEM :
DPI :
NISSENS :
APPLICATION :
01-04 NISSAN FRONTIER 3.3L
01-04 NISSAN XTERRA 3.3L

NISSAN/INFINITI

NI-0325

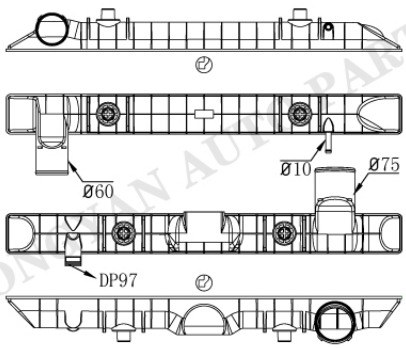

NI-0326

Tank size :(R9×5×4.5×75×745)
OEM :
DPI :
NISSENS :
APPLICATION :
NISSAN UD

NI-0327

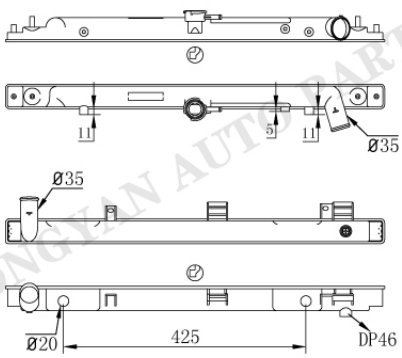

NI-0159AT/MT

Tank size :(R8.5×5×4.5×57×713)
OEM :21460EA215
DPI :
NISSENS :
APPLICATION :
05-14 NISSAN FRONTIER 4.0L
05-12 NISSAN PATHFINDER 4.0/5.6L
05-14 NISSAN XTERRA 4.0L

NI-0328

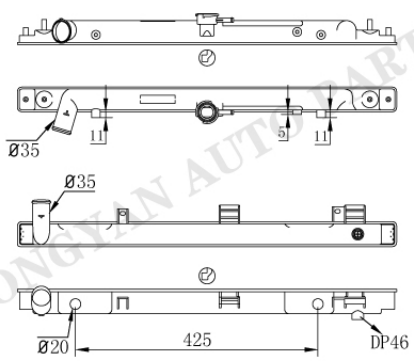

NI-0159AT/MT

Tank size :(R8.5×5×4.5×57×713)
OEM :21460EA005
DPI :
NISSENS :
APPLICATION :
05-14 NISSAN FRONTIER 2.5L

NI-0190

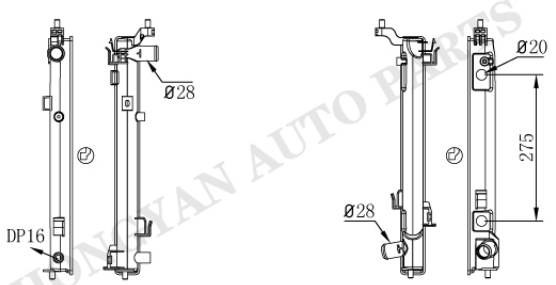

NI-0329AT

Tank size :(R8×5×4.5×46.3×448)
OEM :
DPI :13260 13261
NISSENS :
APPLICATION :
12-15 NISSAN VERSA 1.6/1.8L
12-15 NISSAN TIIDA 1.6/1.8L

HONGYAN AUTO PARTS

NISSAN/INFINITI

NI-0330

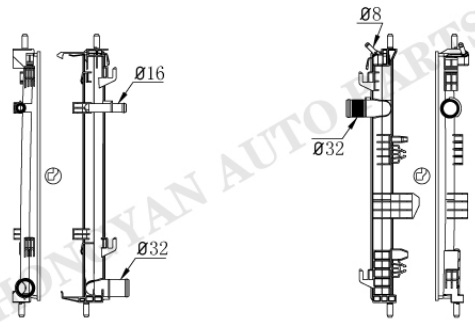

NI-0331

Tank size :(R5.5×4×5.5×41.5×468)
OEM :
DPI :
NISSENS :
APPLICATION :
2010- NISSAN NV200

NI-0106

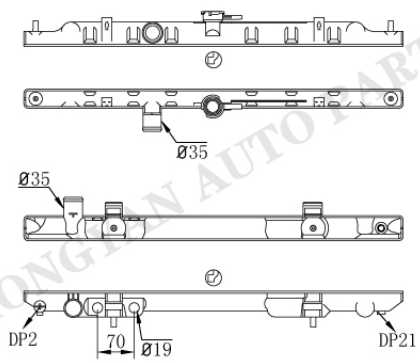

NI-0332AT

Tank size :(R8.5×5×4.5×36/47×713)
OEM :214606N103
DPI :
NISSENS :
APPLICATION :
2002-06 NISSAN SENTRA 2.5L

NI-0333

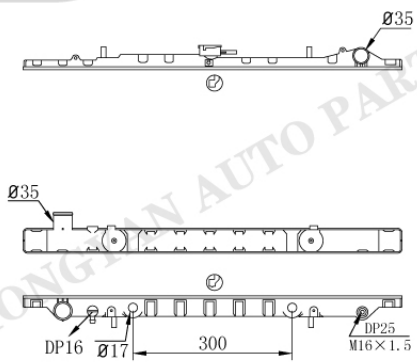

NI-0015AT/MT

Tank size :(R8.5×5×5×36/47×713)
OEM :2146057E00 2146085E00
DPI :48 1186 1242
NISSENS :62997 62999
APPLICATION :
87-91 NISSAN BLUEBIRD U12
87-91 NISSAN MAXIMA J30
89-00 NISSAN FAIRLADY Z32

NI-0334

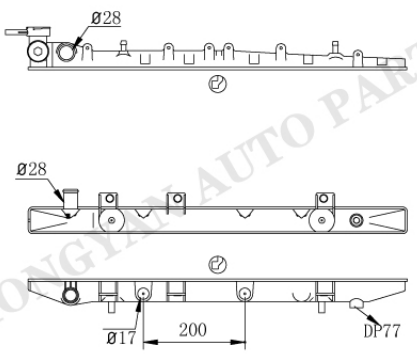

NI-0002AT/MT

Tank size :(R8×5×4×47×669)
OEM :
DPI :
NISSENS :
APPLICATION :
NISSAN SUNNY SENTRA

NISSAN/INFINITI

NI-0335

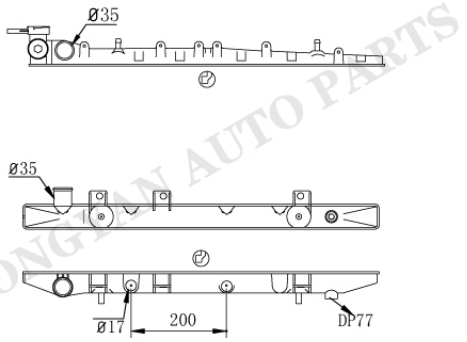

NI-0006AT/MT

Tank size :(R8×5×4×47×669)
OEM :
DPI :
NISSENS :
APPLICATION :
NISSAN SUNNY SENTRA

NI-0336

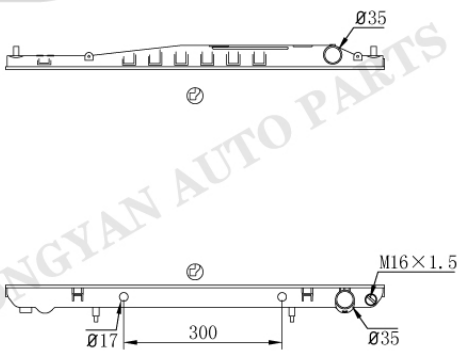

NI-0337AT/MT

Tank size :(R9×5×4.5×47×713)
OEM :214106L000
DPI :
NISSENS :
APPLICATION :
93-99 NISSAN LAUREL

NI-0338

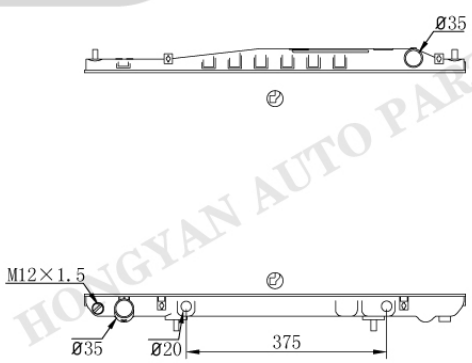

NI-0339AT/MT

Tank size :(R9.5×4.7×5×46.5×716.5)
OEM :21460AR000
DPI :2426
NISSENS :
APPLICATION :
03-04 INFINITI M45 4.5L
02-06 INFINITI Q45 4.5L

NI-0338

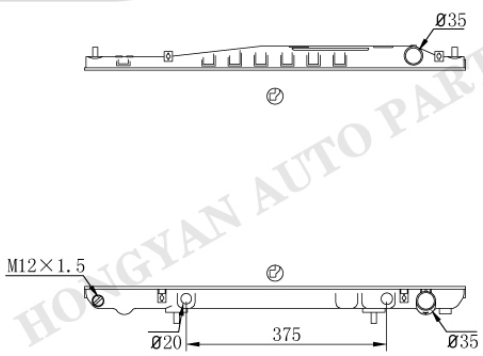

NI-0340AT/MT

Tank size :(R9.5×4.7×5×46.5×716.5)
OEM :
DPI :
NISSENS :
APPLICATION :
03-04 INFINITI M45 4.5L
02-06 INFINITI Q45 4.5L

HONGYAN AUTO PARTS

NISSAN/INFINITI

NI-0341AT/MT



NI-0342AT/MT

Tank size :(R8.5×5.5×5×52×480)
OEM :
DPI :2053
NISSENS :
APPLICATION :
94-96 INFINITI Q45 4.5L

NI-0343

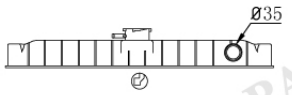

NI-0344

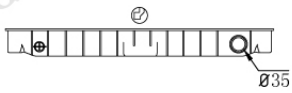

Tank size : (R5×4.8×5×78×504)
OEM :
DPI :
NISSENS :
APPLICATION :
NISSAN

NI-0345

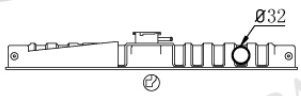

NI-0346

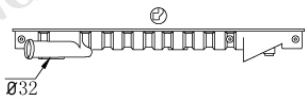

Tank size : (R5×4×5×62×549)
OEM :
DPI :
NISSENS :
APPLICATION :
NISSAN

NI-0347

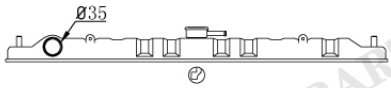

NI-0348AT/MT

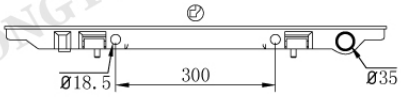

Tank size : (R10×5.5×5×50×718)
OEM :
DPI :
NISSENS :
APPLICATION :
NISSAN

HONGYAN AUTO PARTS

NISSAN/INFINITI

NI-0349

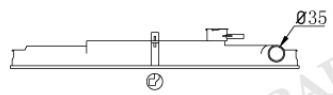

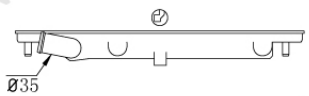

NI-0350

Tank size :(R8.5×5×4×52×543)
OEM :
DPI :
NISSENS :
APPLICATION :
99- NISSAN ATLAS CABSTAR

NI-0351

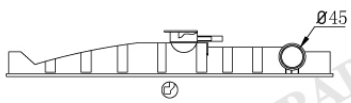



NI-0352

Tank size :(R8.5×5×5×60.5×614)
OEM :2146034200
DPI :
NISSENS :
APPLICATION :
99- NISSAN UD TRUCK

NI-0353

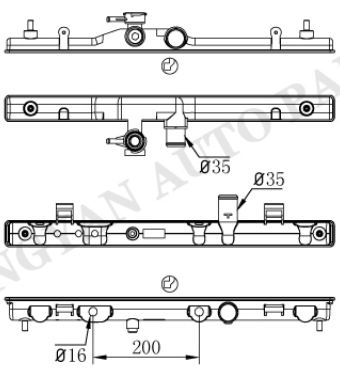

NI-0354AT/MT

Tank size :(R8.5×4×4.5×48×620)
OEM :
DPI :
NISSENS :
APPLICATION :
06- NISSAN TIIDA

NI-0353

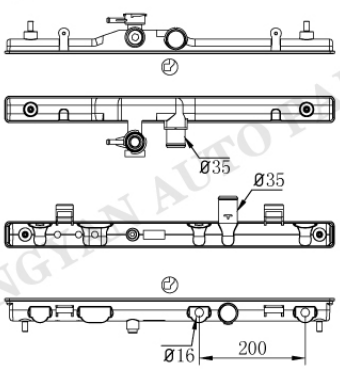

NI-0355AT

Tank size :(R8.5×4×4.5×48×620)
OEM :
DPI :
NISSENS :
APPLICATION :
06- NISSAN TIIDA

HONGYAN AUTO PARTS

NISSAN/INFINITI

NI-0353

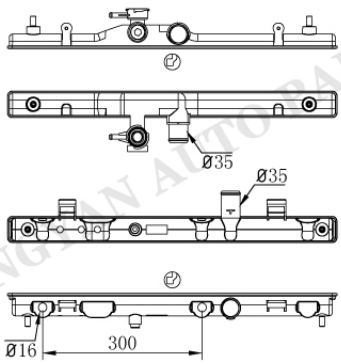

NI-0356AT

Tank size :(R8.5×4×4.5×48×620)
OEM :
DPI :
NISSENS :
APPLICATION :
06- NISSAN TIIDA

NI-0353

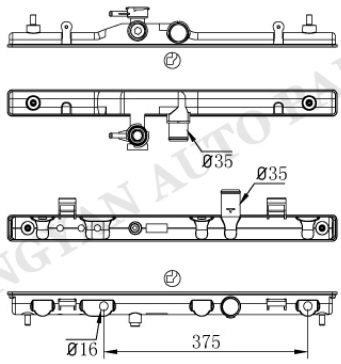

NI-0357AT

Tank size :(R8.5×4×4.5×48×620)
OEM :
DPI :
NISSENS :
APPLICATION :
06- NISSAN TIIDA

NI-0358

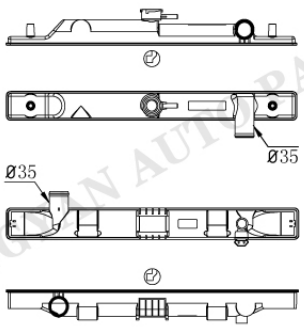

NI-0359

Tank size :(R8×5×4×52/56.5×546.5)
OEM :
DPI :
NISSENS :
APPLICATION :
NISSAN SVLIANA'200BAS

NI-0264



NI-0360

Tank size :(R8.5×5×4×46.5×283)
OEM :
DPI :
NISSENS :
APPLICATION :
04- NISSAN URVAN TD27

HONGYAN AUTO PARTS

NISSAN/INFINITI

NI-0361

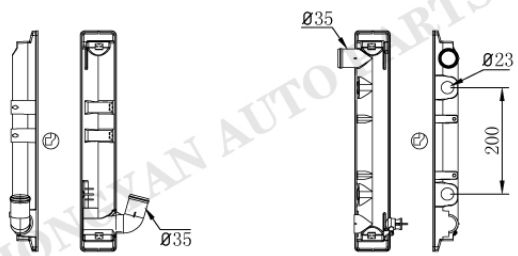

NI-0267AT/MT

Tank size :(R8.5×4.8×4×65×415)
OEM :
DPI :
NISSENS :
APPLICATION :
04- NISSAN URVAN TD27

NI-0362

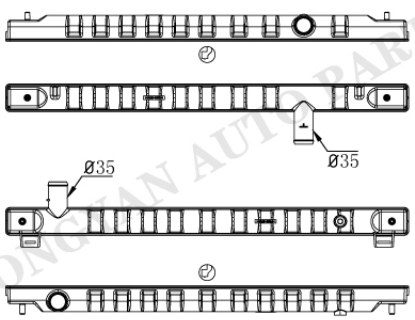

NI-0363

Tank size :(R8.5×3.5×5×52.5×758)
OEM :
DPI :
NISSENS :
APPLICATION :
NISSAN INFINITI

NI-0364

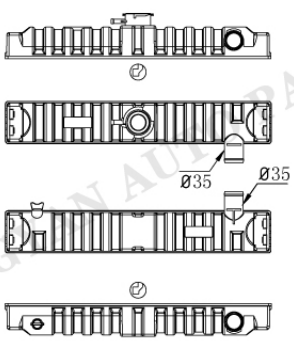

NI-0365

Tank size :(R5×4×5×77.5×500)
OEM :
DPI :
NISSENS :
APPLICATION :
NISSAN PICKUP

NI-0366



NI-0367

Tank size :(R4.5×4×5×34×447)
OEM :
DPI :
NISSENS :
APPLICATION :

HONGYAN AUTO PARTS

NISSAN/INFINITI

NI-0368



NI-0369

Tank size :(R7×4×4.4×31.2×486)
OEM :
DPI :
NISSENS :
APPLICATION :
15- NISSAN QASHAQI

NI-0368



NI-0370

Tank size :(R7×4×4.4×31.2×486)
OEM :
DPI :
NISSENS :
APPLICATION :
15- NISSAN QASHAQI

NI-0235

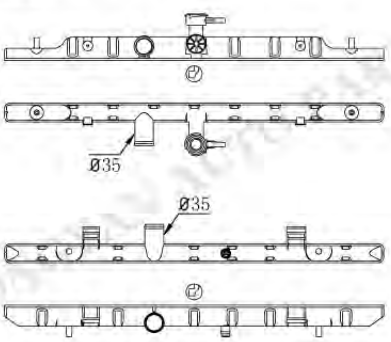

NI-0371

Tank size :(R8.5×5×4×36×713)
OEM :
DPI :
NISSENS :
APPLICATION :

NI-0372

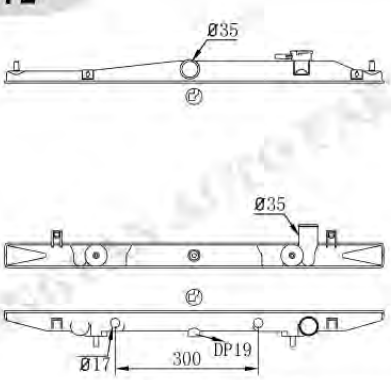

NI-0028AT/MT

Tank size :(R8.5×5×4.5×47×713)
OEM :
DPI :
NISSENS :
APPLICATION :

NISSAN/INFINITI

NI-0373

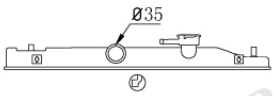

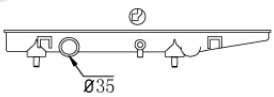

NI-0374

Tank size :(R6.5×4×5×42.5×501)
OEM :
DPI :
NISSENS :
APPLICATION :

NI-0373

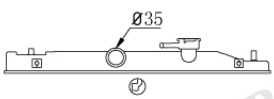

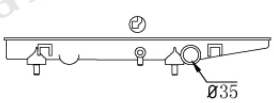

NI-0375

Tank size :(R6.5×4×5×42.5×501)
OEM :
DPI :
NISSENS :
APPLICATION :

NI-0376



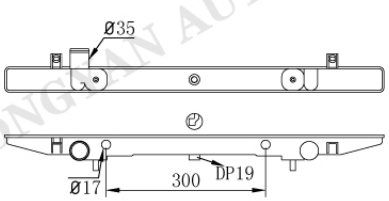

NI-0030AT/MT

Tank size :(R8×4.5×5×47×713)
OEM :
DPI :
NISSENS :
APPLICATION :

NI-0377AT/MT

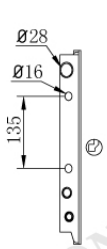

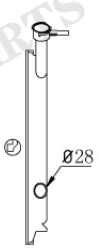

NI-0378

Tank size :(51.7×365)
OEM :
DPI :
NISSENS :
APPLICATION :
87-88 NISSAN PULSAR SENTRA

HONGYAN AUTO PARTS

NISSAN/INFINITI

NI-0379

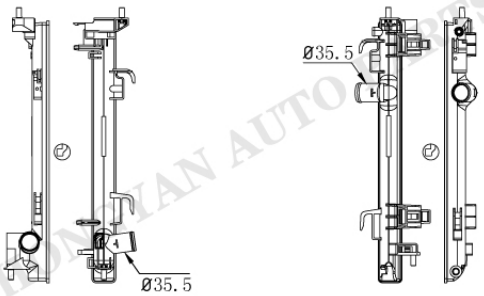

NI-0380

Tank size :(R8×4×5×45×492.5)
OEM :
DPI :
NISSENS :
APPLICATION :

NI-0381

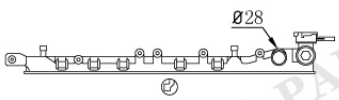

Tank size :(R8.5×4.5×5×35×547)
OEM :
DPI :
NISSENS :
APPLICATION :

NI-0383

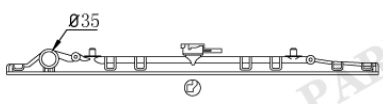

Tank size :(R8.5×4.5×5×36×699)
OEM :
DPI :
NISSENS :
APPLICATION :

NI-0385

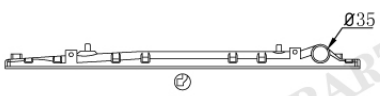

Tank size :(R8.5×4×5×46.6×667)
OEM :
DPI :
NISSENS :
APPLICATION :

HONGYAN AUTO PARTS

NISSAN/INFINITI

NI-0387

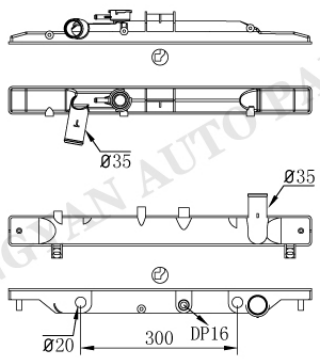

NI-0322AT/MT

Tank size :(R8×5×4×52×569)
OEM :
DPI :
NISSENS :
APPLICATION :
2006- NISSAN URVAN 2.4L

NI-0388

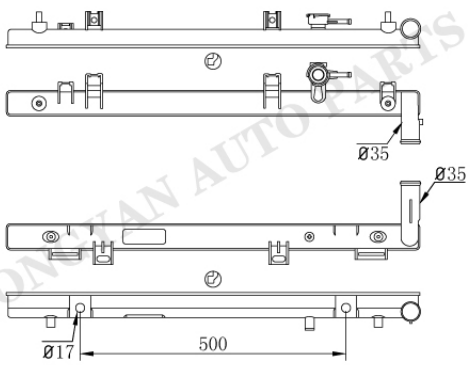

NI-0389AT/MT

Tank size :(R8×4×5×49×777.5)
OEM :
DPI :13348
NISSENS :
APPLICATION :
13- INFINITI JX35 3.5L
14-16 INFINITI QX60 2.5/3.5L
13-17 NISSAN PATHFINDER 3.5L

NI-0390

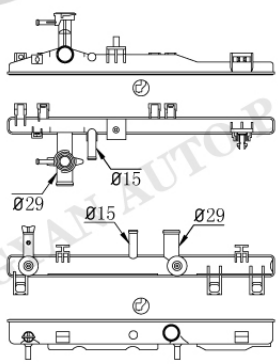

NI-0391

Tank size :(R9×4×5×31/40×502)
OEM :
DPI :13469
NISSENS :
APPLICATION :
14-17 MITSUBISHI MIRAGE 1.2L

NI-0272

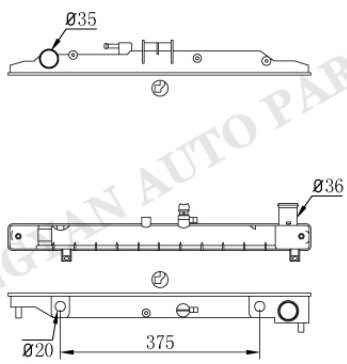

NI-0392AT/MT

Tank size :(R8×5×4×52×569)
OEM :
DPI :
NISSENS :
APPLICATION :

HONGYAN AUTO PARTS

NISSAN/INFINITI

NI-0393

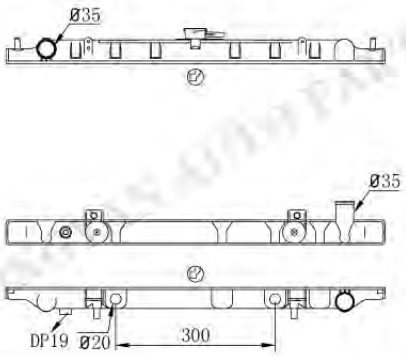

NI-0100AT/MT

Tank size :(R9×4.5×5×46.2×713)
OEM :
DPI :1752
NISSENS :
APPLICATION :
95-99 NISSAN MAXIMA 3.0L
96-99 INFINITI I30 3.0L

NI-0394

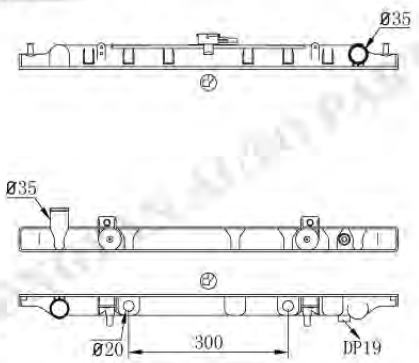

NI-0091AT/MT

Tank size :(R9×4.5×5×46.2×713)
OEM :
DPI :
NISSENS :
APPLICATION :
95-99 NISSAN MAXIMA 3.0L
96-99 INFINITI I30 3.0L

NI-0395

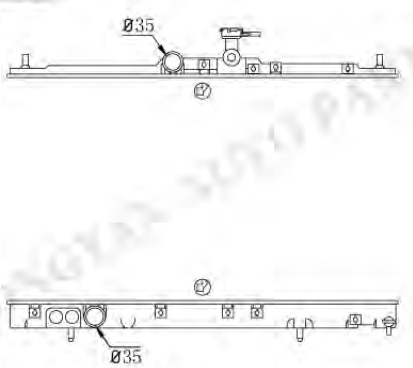

NI-0396

Tank size :(R8×4.5×4.5×47×735)
OEM :
DPI :
NISSENS :
APPLICATION :

NI-0397

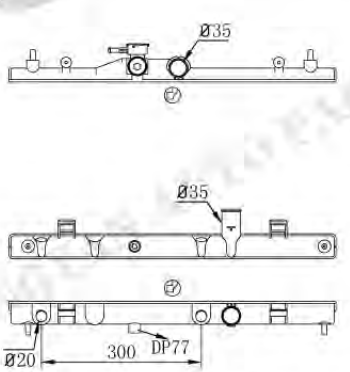

NI-0098AT/MT

Tank size :(R8×5×4×47×613.5)
OEM :21410JX00A 21460JX10A
DPI :2981
NISSENS :
APPLICATION :
07-11 NISSAN TIIDA 1.8L
07-11 NISSAN VERSA 1.6/1.8L

NISSAN/INFINITI

NI-0398

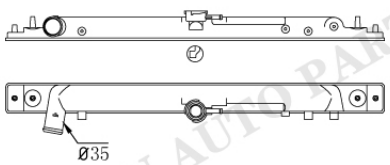

Tank size :(R5×3.5×4×57×713)
OEM :
DPI :
NISSENS :
APPLICATION :

NI-0401

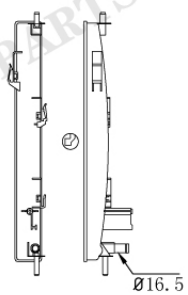

Tank size :(R5×4×5×50×452)
OEM :
DPI :
NISSENS :
APPLICATION :
NISSAN QASHAQI

NI-0402

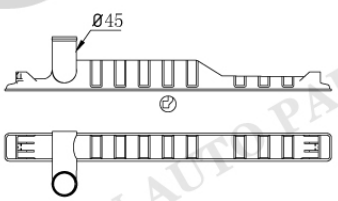

Tank size :(R8×4×5×52×613.5)
OEM :2140034Z13 2140035Z08
DPI :
NISSENS :
APPLICATION :
99- UD CONDOR

NI-0404

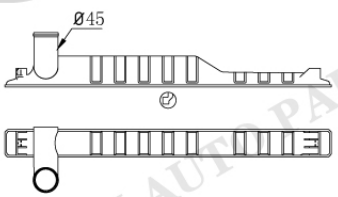

Tank size :(R8×4×5×52×613.5)
OEM :2140034Z14
DPI :
NISSENS :
APPLICATION :
99- UD CONDOR

HONGYAN AUTO PARTS

NISSAN/INFINITI

NI-0406

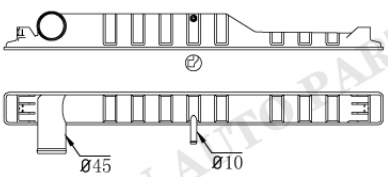

Tank size :(R5×3.5×4×57×713)
OEM :214006Z003 214006Z004
DPI :
NISSENS :
APPLICATION :
2001- UD BUS

NI-0408

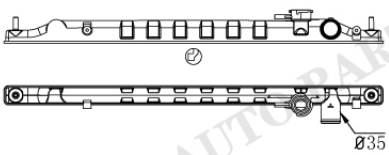

Tank size :(R8.5×5×4×36×713)
OEM :21410VM50A
DPI :
NISSENS :
APPLICATION :
01- NISSAN

NI-0410

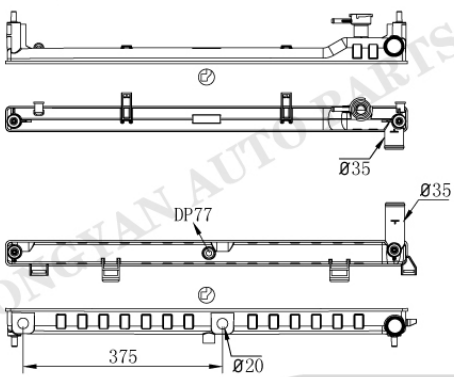

NI-0411AT/MT

Tank size :(R9.5×5×5×47.6×756)
OEM :214605AA0A
DPI :13532
NISSENS :
APPLICATION :
15-16 NISSAN MURANO 3.51

NI-0185

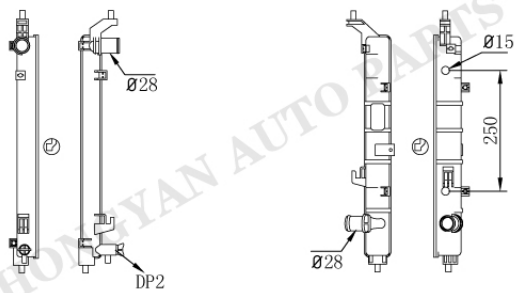

NI-0412AT/MT

Tank size :(R9×4.5×5×39.5/49.5×418)
OEM :
DPI :
NISSENS :
APPLICATION :

HONGYAN AUTO PARTS

NISSAN/INFINITI

NI-0413

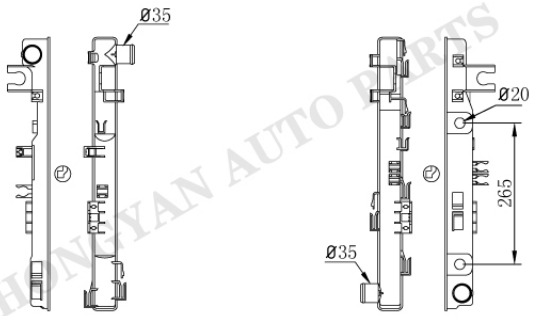

NI-0414AT/MT

Tank size :(R8.5×5×4×46.5×514)
OEM :
DPI :
NISSENS :
APPLICATION :
16- NAVARA NP300

NI-0192

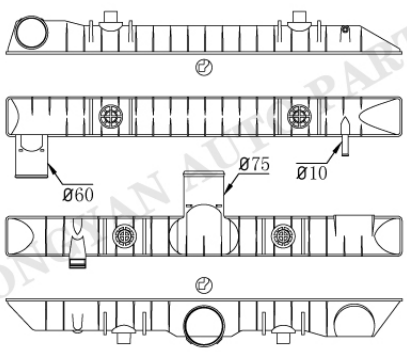

NI-0415

Tank size :(R9×5×4.5×75×745)
OEM :2140000Z0H 2140000Z1H
DPI :
NISSENS :
APPLICATION :
NISSAN TRUK

NI-0285

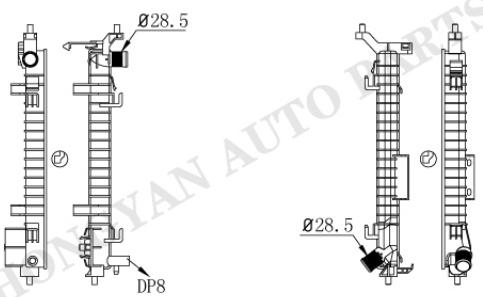

NI-0416

Tank size :(R5×4×4.5×41.5×413)
OEM :
DPI :
NISSENS :
APPLICATION :
NISSAN SUNNY

NI-0295

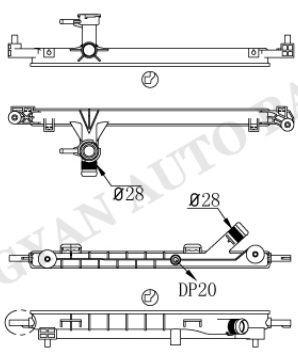

NI-0417

Tank size :(R5.5×4×5.5×32×450)
OEM :
DPI :
NISSENS :
APPLICATION :
10- NISSAN MICRA 1.2L
10- NISSAN MARCH 1.2L

HONGYAN AUTO PARTS

	Tank size : OEM : DPI : NISSENS : APPLICATION :
	Tank size : OEM : DPI : NISSENS : APPLICATION :
	Tank size : OEM : DPI : NISSENS : APPLICATION :
	Tank size : OEM : DPI : NISSENS : APPLICATION :

HONGYAN AUTO PARTS

	Tank size : OEM : DPI : NISSENS : APPLICATION :
	Tank size : OEM : DPI : NISSENS : APPLICATION :
	Tank size : OEM : DPI : NISSENS : APPLICATION :
	Tank size : OEM : DPI : NISSENS : APPLICATION :

HONGYAN AUTO PARTS

	Tank size : OEM : DPI : NISSENS : APPLICATION :
	Tank size : OEM : DPI : NISSENS : APPLICATION :
	Tank size : OEM : DPI : NISSENS : APPLICATION :
	Tank size : OEM : DPI : NISSENS : APPLICATION :

HONGYAN AUTO PARTS

OPEL

OP-0001

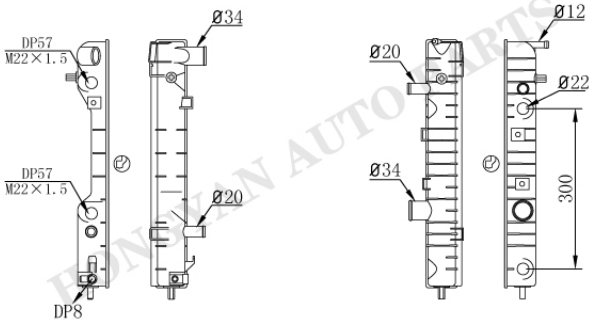

OP-0002AT/MT

Tank size :(R4.5×4.5×5×59×466)
OEM :52463049/50 52482600
6302006
DPI :
NISSENS :63073A
APPLICATION :
94-03 OPEL OMEGA 2.5/3.0L
97-01 CADILLAC CATERA 2.5/3.0L

OP-0003

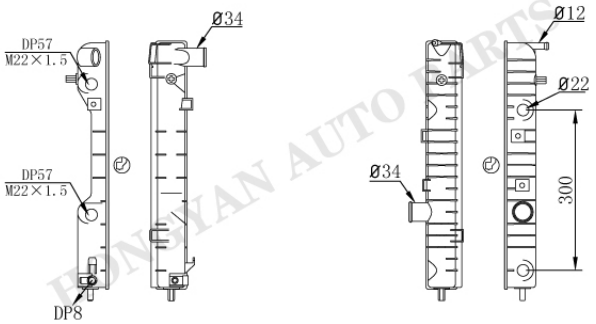

OP-0004AT/MT

Tank size :(R4.5×4.5×5×59×466)
OEM :1300165 52463045/6
52464745 6302007
DPI :
NISSENS :63072A
APPLICATION :
94-03 OPEL OMEGA 2.0/2.5/3.0L

OP-0005AT/MT

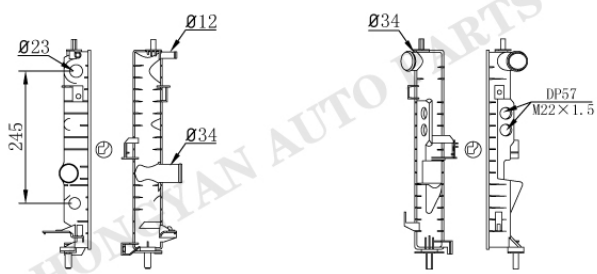

OP-0006

Tank size :(R4.5×3.2×5×54.5×374)
OEM :1300180 1300185 1300242
52479098 52492109
DPI :
NISSENS :630121
APPLICATION :
95-03 OPEL VECTRA 1.6/1.8/2.0/2.2L

OP-0007AT/MT

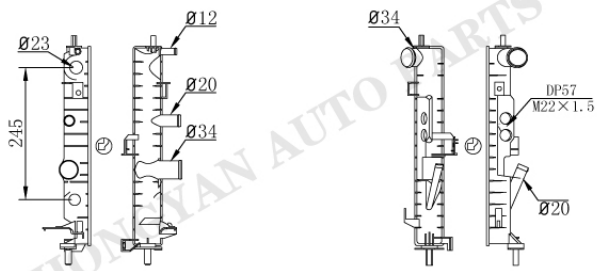

OP-0008

Tank size :(R4.5×3.2×5×54.5×374)
OEM :1300181
DPI :
NISSENS :63013A 63078
APPLICATION :
95-03 OPEL VECTRA 2.5L

HONGYAN AUTO PARTS

OP-1

OPEL

OP-0009AT/MT

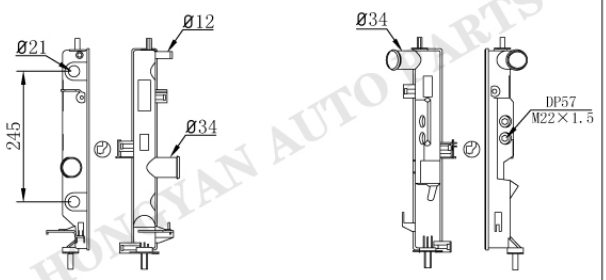

OP-0010

Tank size :(R4.5×4×5.8×47.3×377.9)
OEM :
DPI :
NISSENS :
APPLICATION :
95-03 OPEL VECTRA 1.6/1.8/2.0/2.2L

OP-0011AT/MT

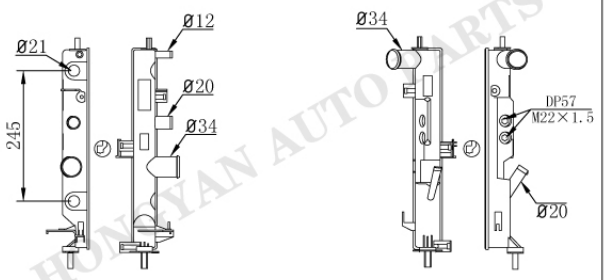

OP-0012

Tank size :(R4.5×4×5.8×47.3×377.9)
OEM :
DPI :
NISSENS :
APPLICATION :
95-03 OPEL VECTRA 2.5L

OP-0013AT/MT

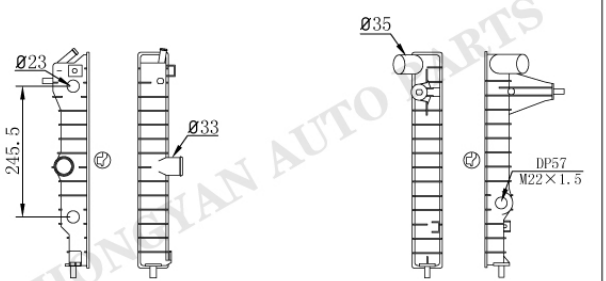

OP-0014

Tank size :(R5×6×5×57.5×405.5)
OEM :
DPI :
NISSENS :
APPLICATION :
90-97 OPEL CALIBRA 1.6L
88-95 OPEL VECTRA 1.6/1.8/2.0L

OP-0013AT/MT

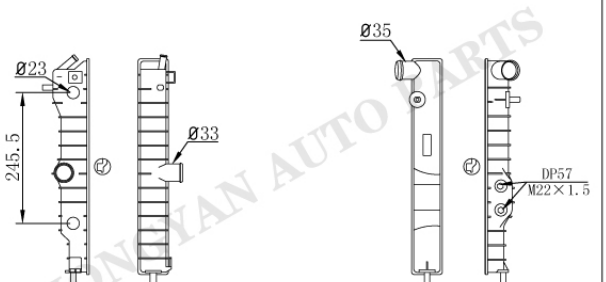

OP-0015

Tank size :(R5×6×5×57.5×405.5)
OEM :1300092/107 52455192
90443463 90443466
DPI :
NISSENS :630631
APPLICATION :
90-97 OPEL CALIBRA 1.6L
88-95 OPEL VECTRA 1.6/1.8/2.0L

HONGYAN AUTO PARTS

OPEL

OP-0016

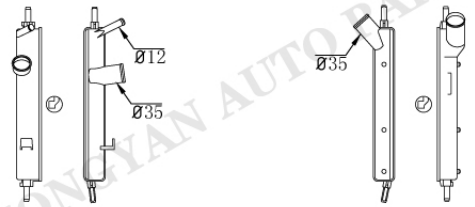

Tank size : (R4.5×4.5×4.5×40×289)
OEM :
DPI :
NISSENS :
APPLICATION :
93-04 OPEL CORSA 1.4/1.6L
94-00 OPEL TIGRA 1.4/1.6L
94-01 OPEL COMBO 1.2/1.6L

OP-0017

GM-0001AT/MT

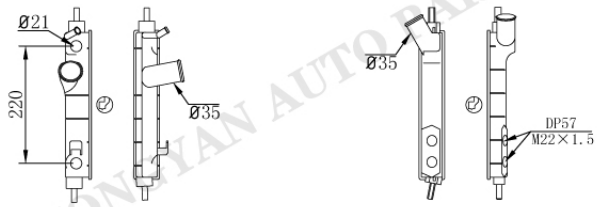

Tank size :(R3.5×5×4.5×48×280)
OEM :1300152 52459323
DPI :
NISSENS :63254A 63291
APPLICATION :
93-04 OPEL CORSA 1.4/1.6L
94-00 OPEL TIGRA 1.4/1.6L
94-01 OPEL COMBO 1.2/1.6L

OP-0018

OP-0019AT/MT

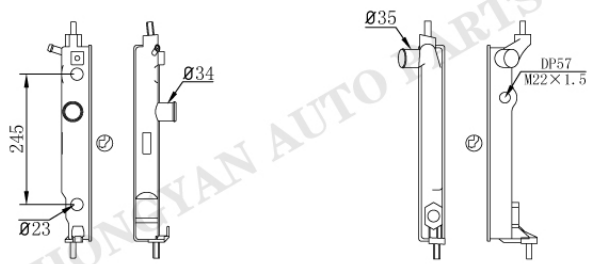

Tank size : (R4.5×4.5×4.5×48.5×368)
OEM : 1300116/47/09/48 52455010
52459347 52459348
DPI :
NISSENS :63252A 63253A
APPLICATION :
91-05 OPEL ASTRA 1.4/1.6/1.8/2.0L

OP-0020

OP-0021

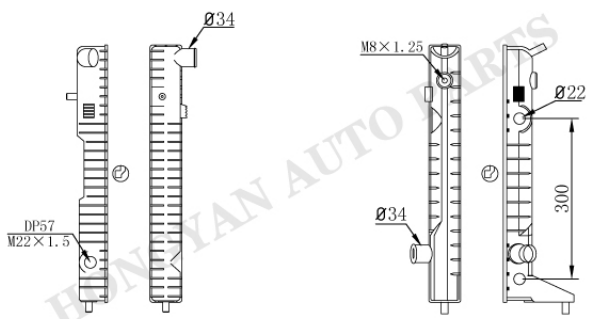

Tank size :(R5×4.5×5×60×483)
OEM :130095
DPI :
NISSENS :63049
APPLICATION :
87-94 OPEL OMEGA 2.6/3.0L

OP-0022AT/MT

OP-3

HONGYAN AUTO PARTS

OPEL

OP-0023

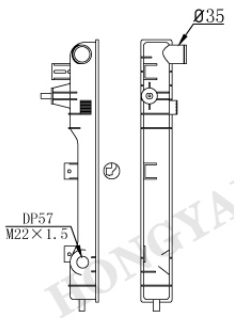

Tank size :(R4×6×5×58.5×493)
OEM :90231320/321
DPI :
NISSENS :
APPLICATION :
87-93 OPEL SENATOR 2.5/2.6/3.0L
86-94 OPEL OMEGA 2.5/2.6/3.0L

OP-0025

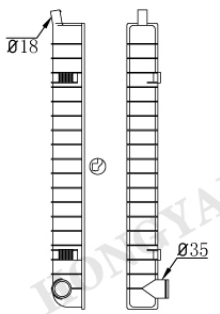

Tank size :(R4×6×5×58×538)
OEM :
DPI :
NISSENS :
APPLICATION :

OP-0027

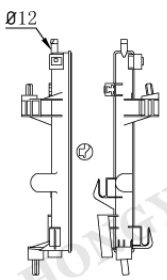

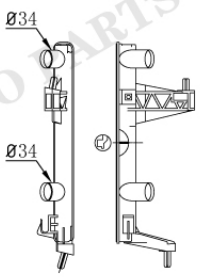

Tank size :(R4×4.1×5.4×37.7×377.9)
OEM :13200236
DPI :
NISSENS :
APPLICATION :
00- OPEL COMBO 1.2L
00- OPEL CORSA 1.0/1.2/1.4/1.6L
04- OPEL TIGRA 1.4L

OP-0028

OP-0029

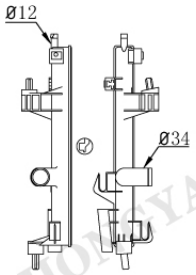

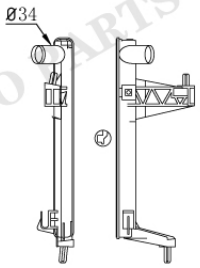

Tank size :(R4×4.1×5.4×37.7×377.9)
OEM :13200237
DPI :
NISSENS :
APPLICATION :
00- OPEL COMBO 1.2L
00- OPEL CORSA 1.0/1.2/1.4/1.6L
04- OPEL TIGRA 1.4L

OP-0030

HONGYAN AUTO PARTS

OPEL

OP-0031

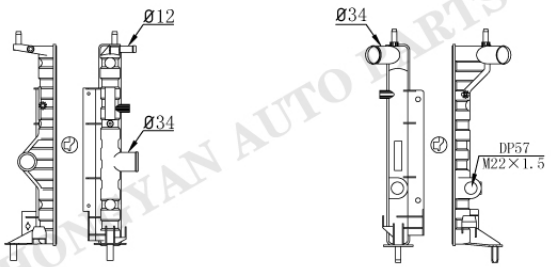

OP-0032

Tank size :(R4×4×5.6×42.8×377.9)
OEM :90528302
DPI :
NISSENS :630681
APPLICATION :
95-03 OPEL VECTRA 1.6/1.8/2.0L

OP-0033AT/MT

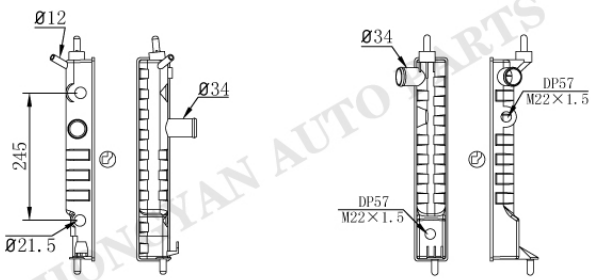

OP-0034

Tank size :(R5×4×5×62×382)
OEM :
DPI :
NISSENS :
APPLICATION :
OPEL

OP-0035AT/MT

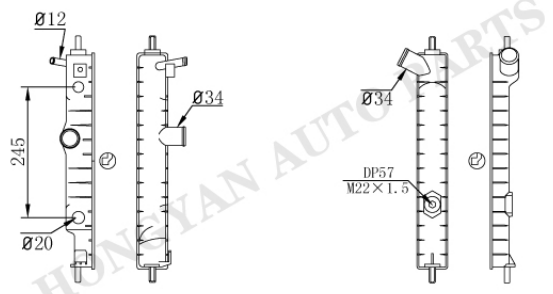

OP-0036

Tank size :(R5×6×5×57.5×405.5)
OEM :1300111/32 1302084/111
52456308/9 90443392 97201508
DPI :
NISSENS :63061
APPLICATION :
91-05 OPEL ASTRA 1.6/2.0L

OP-0037

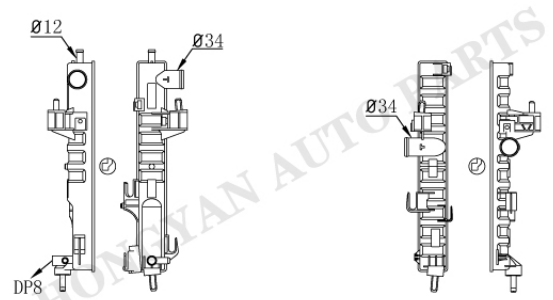

OP-0038

Tank size :(R5.5×5×5×55×395)
OEM :1300233/332 9196694
95513832
DPI :
NISSENS :63009A
APPLICATION :
01-06 OPEL COMBO 1.7L
00-09 OPEL CORSA 1.7L
00-04 OPEL VOTA 1.7L

HONGYAN AUTO PARTS

OPEL

OP-0039

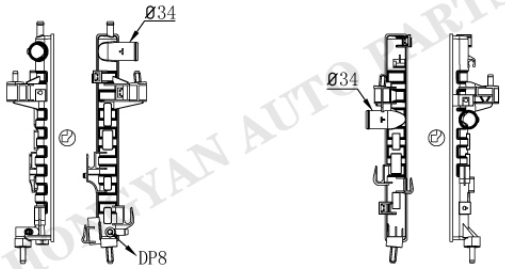

OP-0040

Tank size :(R5.5×4×5×41.5×389.5)
OEM :1300259/61 13100381
93177424/593 24466780
DPI :
NISSENS :63094
APPLICATION :
03-10 OPEL CORSA 1.3/1.7L
00-10 OPEL COMBO 1.3/1.7L
04-09 OPEL TIGRA 1.3L
01-04 OPEL VITA 1.3L

OP-0041

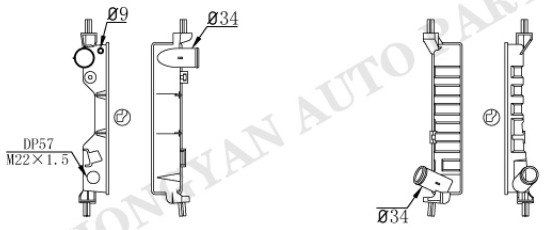

OP-0042

Tank size :(R6.5×5×5×56×280.5)
OEM :1300151 90410049
DPI :
NISSENS :63286A 632861
APPLICATION :
94-01 OPEL COMBO 1.5/1.7L
93-00 OPEL CORSA 1.5/1.7L
93-00 OPEL VITA 1.5/1.7L

OP-0043

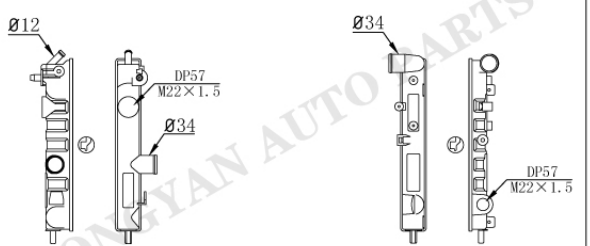

OP-0044

Tank size :(R6×4.5×5.5×48×324)
OEM :90264491
DPI :
NISSENS :
APPLICATION :
92-98 OPEL VECTRA 1.4/1.6L

OP-0045

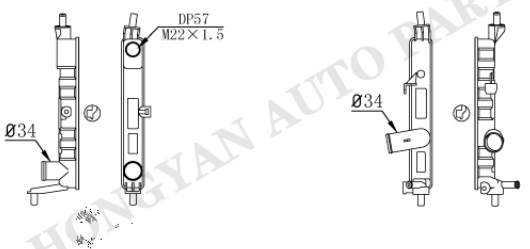

OP-0046

Tank size :(R11.5×4×6×42.5×285.5)
OEM :1300149 52488849 90410047
DPI :
NISSENS :632851
APPLICATION :
94-01 OPEL COMBO 1.2/1.4L
93-00 OPEL CORSA 1.2/1.4L
93-00 OPEL VITA 1.2/1.4L

HONGYAN AUTO PARTS

OPEL

OP-0047AT/MT

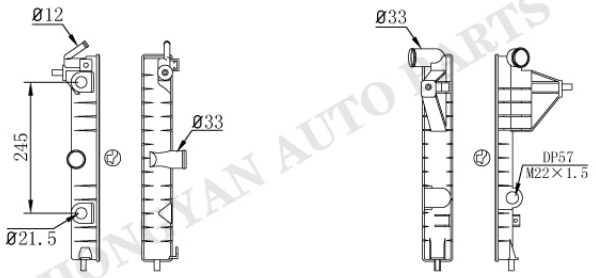

Tank size :(R6.5×4.5×5.5×56.8×388.5)
OEM :1300084/90/97 1300122/5
3096381/2 90442583/622
DPI :
NISSENS :630551
APPLICATION :
88-95 OPEL VECTRA 1.7/1.8/2.0L

OP-0048

OP-0049

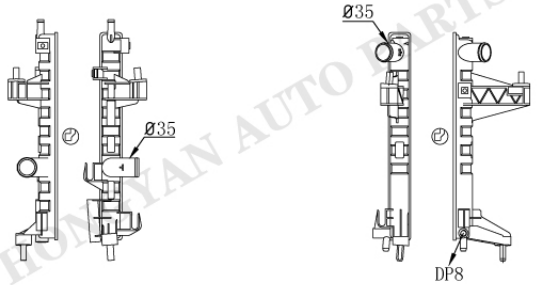

Tank size :(R5.5×4×5×41.5×389.5)
OEM :1300237
DPI :
NISSENS :63008
APPLICATION :
00- OPEL COMBO 1.4L
00- OPEL CORSA 1.4/1.8L
04- OPEL TIGRA 1.8L

OP-0050

OP-0049

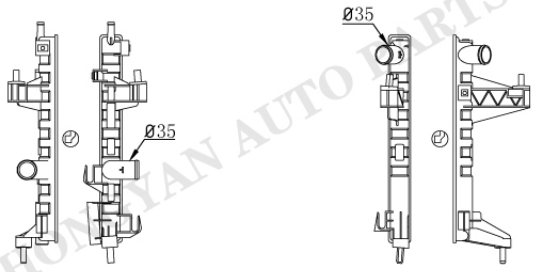

Tank size : (R5.5×4×5×41.5×389.5)
OEM :
DPI :
NISSENS :
APPLICATION :
00- OPEL COMBO 1.4L
00- OPEL CORSA 1.4/1.8L
04- OPEL TIGRA 1.8L

OP-0051

OP-0052

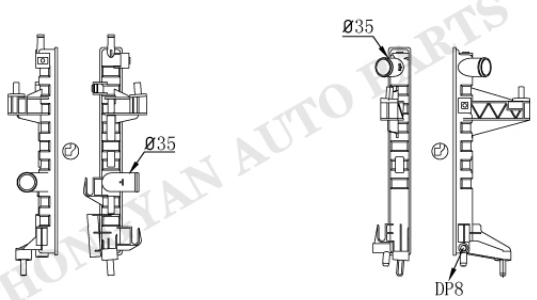

Tank size : (R5.5×5×5×41.5×389.5)
OEM :1300237
DPI :
NISSENS :63008
APPLICATION :
00- OPEL COMBO 1.4L
00- OPEL CORSA 1.4/1.8L
04- OPEL TIGRA 1.8L

OP-0053

HONGYAN AUTO PARTS

OPEL

OP-0052

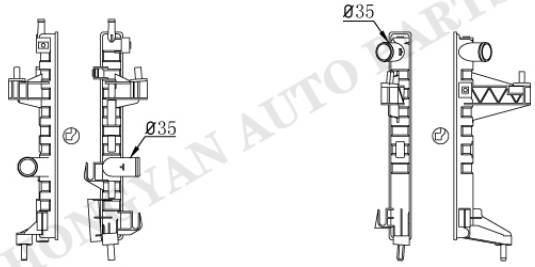

OP-0054

Tank size : (R5.5×5×5×41.5×389.5)
OEM :
DPI :
NISSENS :
APPLICATION :
00- OPEL COMBO 1.4L
00- OPEL CORSA 1.4/1.8L
04- OPEL TIGRA 1.8L

OP-0055

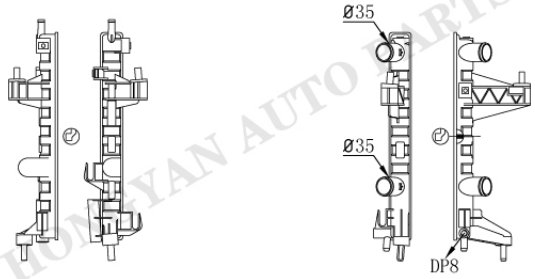

OP-0056

Tank size : (R5.5×4×5×41.5×389.5)
OEM :1300236
DPI :
NISSENS :63007
APPLICATION :
00- OPEL COMBO 1.4L
00- OPEL CORSA 1.4/1.8L
04- OPEL TIGRA 1.8L

OP-0055

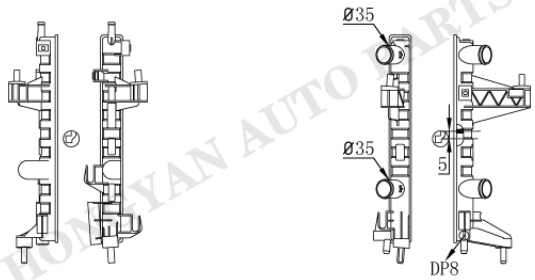

OP-0057

Tank size : (R5.5×4×5×41.5×389.5)
OEM :
DPI :
NISSENS :
APPLICATION :
00- OPEL COMBO 1.4L
00- OPEL CORSA 1.4/1.8L
04- OPEL TIGRA 1.8L

OP-0058

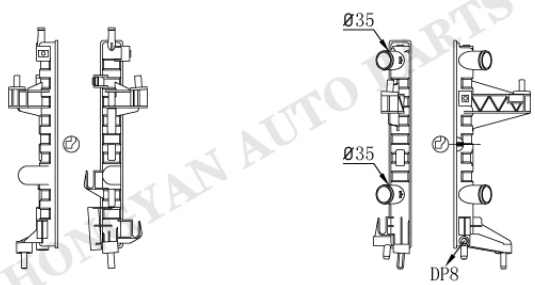

OP-0059

Tank size : (R5.5×5×5×41.5×389.5)
OEM :
DPI :
NISSENS :
APPLICATION :
00- OPEL COMBO 1.4L
00- OPEL CORSA 1.4/1.8L
04- OPEL TIGRA 1.8L

HONGYAN AUTO PARTS

OPEL

OP-0058

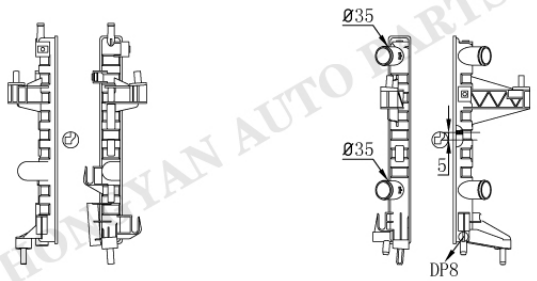

OP-0060

Tank size : (R5.5×5×5×41.5×389.5)
OEM :
DPI :
NISSENS :
APPLICATION :
00- OPEL COMBO 1.4L
00- OPEL CORSA 1.4/1.8L
04- OPEL TIGRA 1.8L

OP-0058

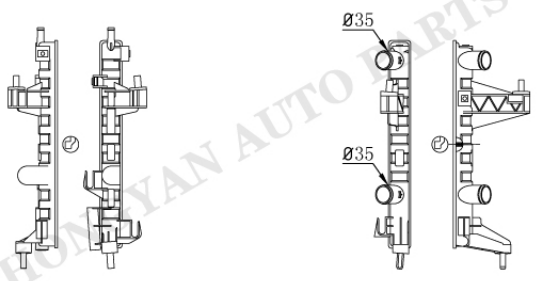

OP-0061

Tank size : (R5.5×5×5×41.5×389.5)
OEM :
DPI :
NISSENS :
APPLICATION :
00- OPEL COMBO 1.4L
00- OPEL CORSA 1.4/1.8L
04- OPEL TIGRA 1.8L

OP-0062AT/MT

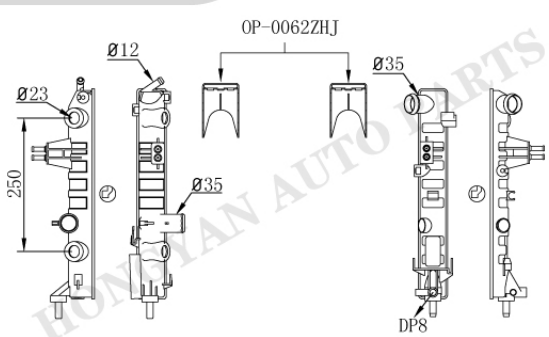

OP-0063

Tank size :(R5.5×5×5×55×395)
OEM :1300210/407 9157938
9192607 93174625
DPI :
NISSENS :63003A
APPLICATION :
99-05 OPEL ASTRA 2.0/2.2L
00-05 OPEL ZAFIRA 2.0/2.2L

OP-0064AT/MT

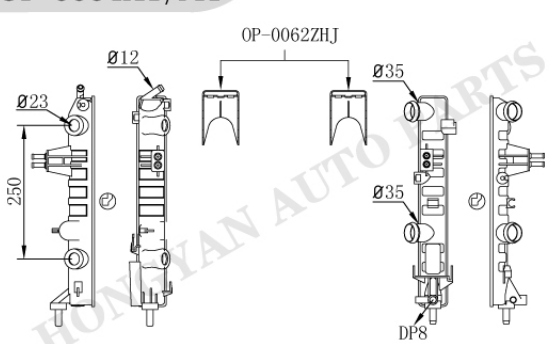

OP-0065

Tank size :(R5.5×5×5×55×395)
OEM :
DPI :
NISSENS :
APPLICATION :
99-05 OPEL ASTRA 2.0/2.2L
00-05 OPEL ZAFIRA 2.0/2.2L

OPEL

OP-0066

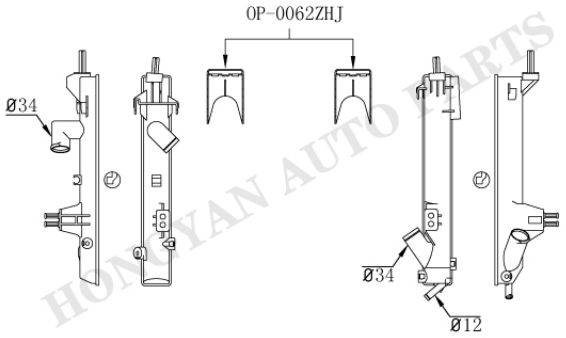

OP-0067

Tank size :(R5.5×5×5×55×395)
OEM :1300209
DPI :
NISSENS :
APPLICATION :
99-05 OPEL ASTRA 1.7L

OP-0068

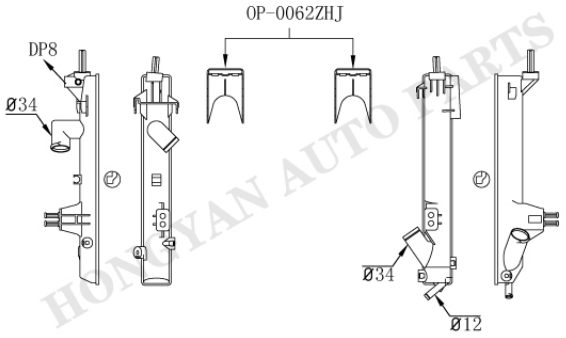

OP-0067

Tank size :(R5.5×5×5×55×395)
OEM :
DPI :
NISSENS :
APPLICATION :
99-05 OPEL ASTRA 1.7L

OP-0069

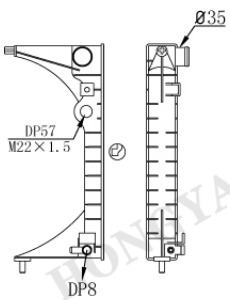

Tank size :(R5×6×5×57.5×405.5)
OEM :52463043/4 6302008
DPI :
NISSENS :63071
APPLICATION :
94-00 OPEL OMEGA 2.0L

OP-0071AT/MT

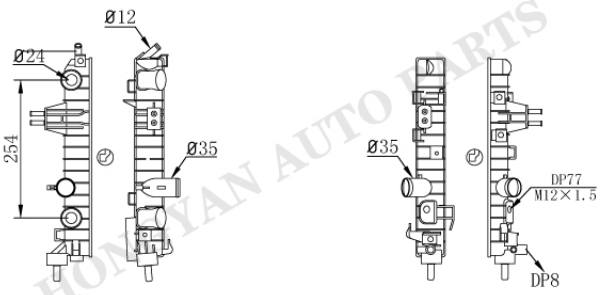

OP-0072

Tank size : (R4.5×3.2×5×54.5×374)
OEM : 1300266 13145211 13170110
DPI :
NISSENS :63028A
APPLICATION :
04-12 OPEL ASTRA 1.6L
05-15 OPEL ZAFIRA 1.6/1.8L

HONGYAN AUTO PARTS

OPEL

OP-0071AT/MT

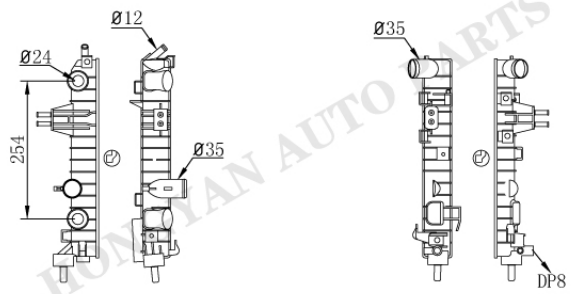

OP-0073

Tank size : (R4.5×3.2×5×54.5×374)
OEM :1300265 13145210
DPI :
NISSENS :63027A
APPLICATION :
04-14 OPEL ASTRA 1.2/1.4/1.8L
06-11 OPEL ZAFIRA 1.6L

OP-0071AT/MT

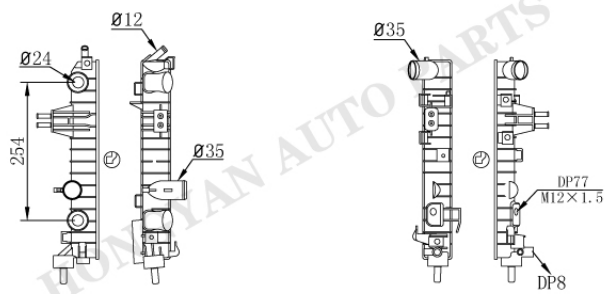

OP-0074

Tank size : (R4.5×3.2×5×54.5×374)
OEM :
DPI :
NISSENS :
APPLICATION :
04-14 OPEL ASTRA 1.2/1.4/1.8L
06-11 OPEL ZAFIRA 1.6L

OP-0075

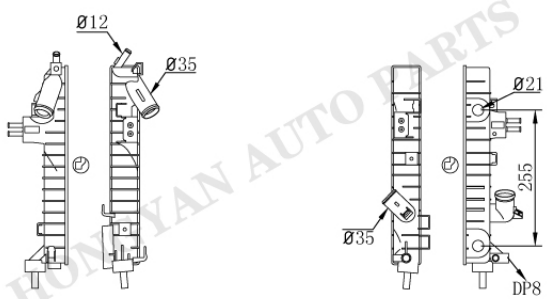

OP-0076AT/MT

Tank size : (R4.5×3.2×5×54.5×374)
OEM :1300269 13128925 13143570
DPI :
NISSENS :63029A
APPLICATION :
05-12 OPEL ASTRA 1.3/1.7/1.9L
06-13 OPEL ZAFIRA 1.7/1.9L

OP-0075

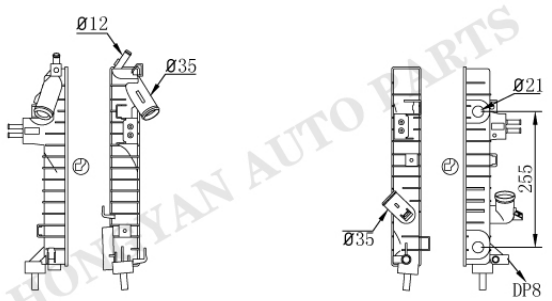

OP-0077AT/MT

Tank size : (R4.5×3.2×5×54.5×374)
OEM :
DPI :
NISSENS :
APPLICATION :
05-12 OPEL ASTRA 1.3/1.7/1.9L
06-13 OPEL ZAFIRA 1.7/1.9L

HUNGYAN AUTO PARTS

OPEL

OP-0078AT/MT

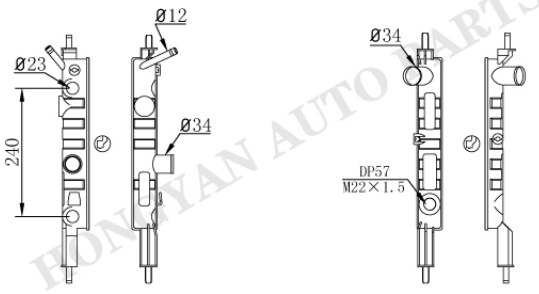

OP-0079

Tank size : (R5.5×4.5×4.5×48×324)
OEM : 1300112/13/40/54 90325151
90412252 90467723 90469375
DPI :
NISSENS :632761
APPLICATION :
91-05 OPEL ASTRA 1.4/1.6L

OP-0078-1AT

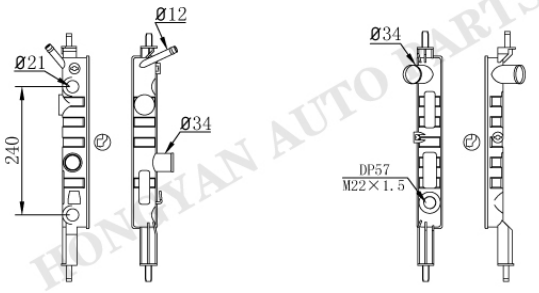

OP-0079

Tank size : (R5.5×4.5×4.5×48×324)
OEM :
DPI :
NISSENS :
APPLICATION :
91-05 OPEL ASTRA 1.4/1.6L

OP-0080

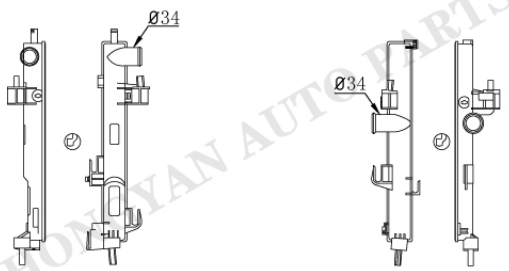

OP-0081

Tank size :(R4×4.5×6×47×376)
OEM :
DPI :
NISSENS :
APPLICATION :
OPEL

OP-0082

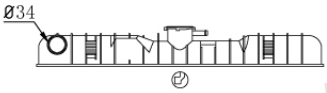



OP-0083

Tank size :(R5×6×4.5×58×539)
OEM :
DPI :
NISSENS :
APPLICATION :
OPEL OMEGA

HONGYAN AUTO PARTS

OPEL

OP-0084

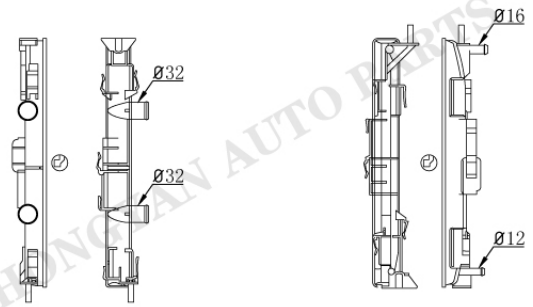

OP-0085

Tank size : (R5×4.3×4.7×47.2×467.2)
OEM :
DPI :
NISSENS :
APPLICATION :
OPEL

OP-0086

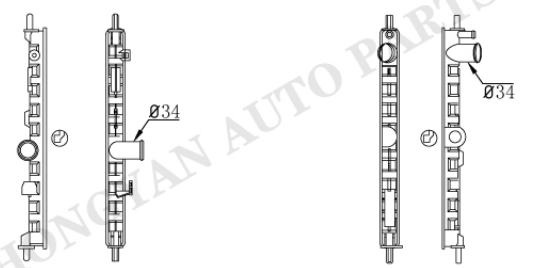

OP-0087

Tank size : (R13×4.5×4.5×36.4×414.7)
OEM :
DPI :
NISSENS :
APPLICATION :
OPEL

OP-0088

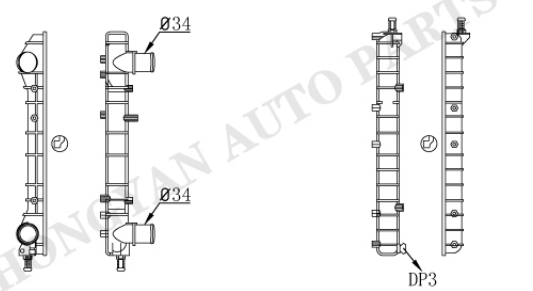

OP-0089

Tank size : (R9.5×4.5×4.7×41.5×420.6)
OEM :
DPI :
NISSENS :
APPLICATION :
OPEL

OP-0090

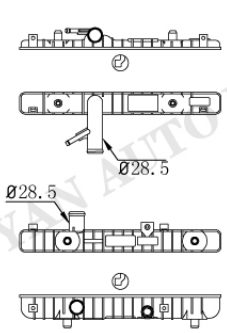

OP-0091

Tank size : (R11×4×5×42×378.3)
OEM :
DPI :
NISSENS :
APPLICATION :
OPEL

HONGYAN AUTO PARTS

OPEL

OP-0092

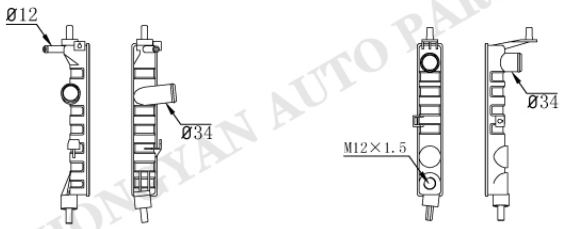

OP-0093

Tank size : (R5×4.5×3.5×48.5×287)
OEM :
DPI :
NISSENS :
APPLICATION :
94-01 OPEL COMBO 1.2/1.4L
93-00 OPEL CORSA 1.2/1.4L

OP-0094



OP-0095

Tank size : (R5×4.5×3.5×48.5×287)
OEM :
DPI :
NISSENS :
APPLICATION :
94-01 OPEL COMBO 1.2/1.4L
93-00 OPEL CORSA 1.2/1.4L

OP-0096

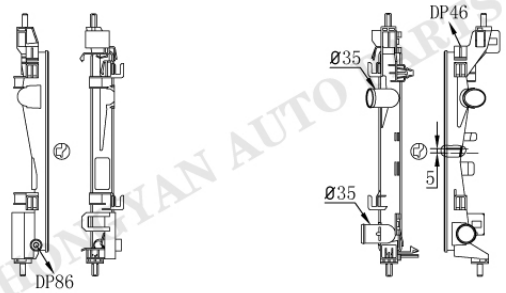

OP-0097

Tank size : (R11.5×4×5.5×42.5×378)
OEM : 1300279/340 13399871
55700448 55701408 55704136
DPI :
NISSENS :61918
APPLICATION :
06-15 OPEL CORSA 1.0/1.2/1.4/1.6L

OP-0096

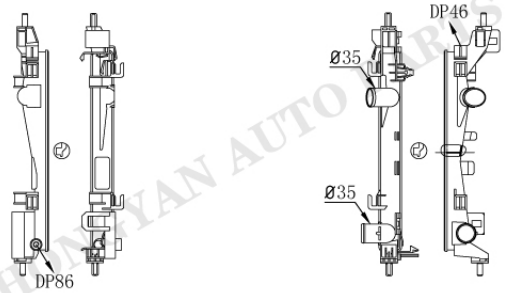

OP-0098

Tank size : (R11.5×4×5.5×42.5×378)
OEM : 1300279/340 13399871
55700448 55701408 55704136
DPI :
NISSENS :61918
APPLICATION :
06-15 OPEL CORSA 1.0/1.2/1.4/1.6L

HONGYAN AUTO PARTS

OPEL

OP-0099



OP-0100

Tank size : (R11.5×4×5.5×42.5×378)
OEM :
DPI :
NISSENS :
APPLICATION :
06-15 OPEL CORSA 1.0/1.2/1.4/1.6L

OP-0101

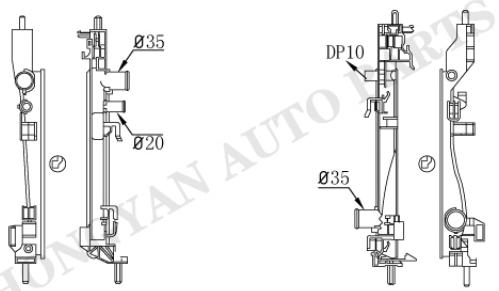

OP-0102

Tank size :(R10×4×5×43×355)
OEM :
DPI :
NISSENS :
APPLICATION :
OPEL

OP-0103



OP-0104AT/MT

Tank size :(R5×6×4.5×57.5×493)
OEM :
DPI :
NISSENS :
APPLICATION :
95-98 OPEL OMEGA 3.0L

OP-0105



OP-0104AT/MT

Tank size :(R5×6×4.5×57.5×493)
OEM :
DPI :
NISSENS :
APPLICATION :
95-98 OPEL OMEGA 3.0L

HONGYAN AUTO PARTS

OPEL

OP-0106

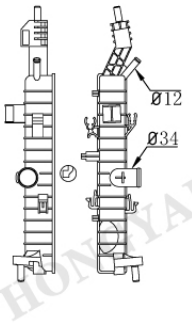

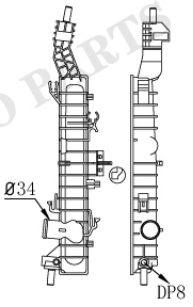

OP-0107

Tank size :(R5×5×5×54.5×374.5)
OEM :1300254/5 13130038/42
DPI :
NISSENS :63087A
APPLICATION :
03-10 OPEL MERIVA 1.7L

OP-0106

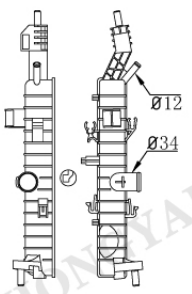

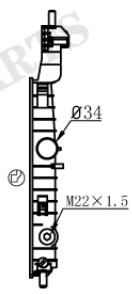

OP-0108

Tank size :(R5×5×5×54.5×374.5)
OEM :1300252/3 1300413 13128930
13130015 13181074
DPI :
NISSENS :63086A 63096
APPLICATION :
03-10 OPEL MERIVA 1.4/1.6/1.8L

OP-0106

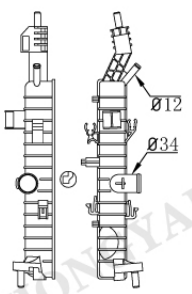

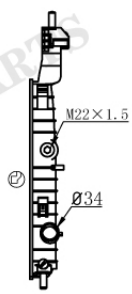

OP-0109

Tank size :(R5×5×5×54.5×374.5)
OEM :
DPI :
NISSENS :
APPLICATION :
03-10 OPEL MERIVA 1.7L

OP-0106

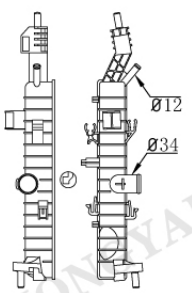



OP-0110

Tank size :(R5×5×5×54.5×374.5)
OEM :
DPI :
NISSENS :
APPLICATION :
03-10 OPEL MERIVA 1.7L

HONGYAN AUTO PARTS

OPEL

OP-0111



OP-0112

Tank size :(R11.5×5×5×42.5×415)
OEM :1300244 24418338
DPI :
NISSENS :63024A
APPLICATION :
03-08 OPEL SIGNUM 1.8L
02-10 OPEL VECTRA 1.8L

OP-0113

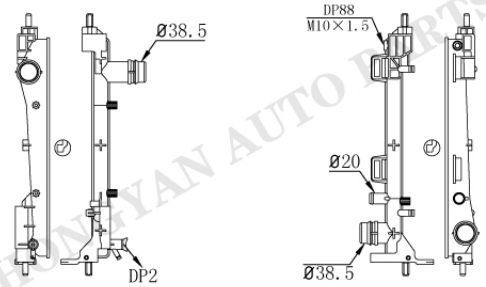

OP-0114

Tank size :(R10×4.5×5×33×414)
OEM :1300328 51812209
51938013 95510450
DPI :
NISSENS :617854
APPLICATION :

OP-0115

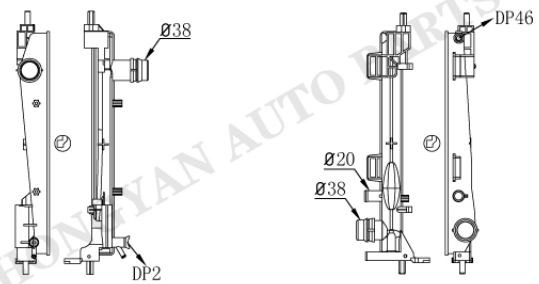

OP-0116

Tank size :(R9×4.2×4.8×42×420)
OEM :1300297 13313296
DPI :
NISSENS :61915
APPLICATION :
06-11 OPEL CORSA 1.3L

OP-0117

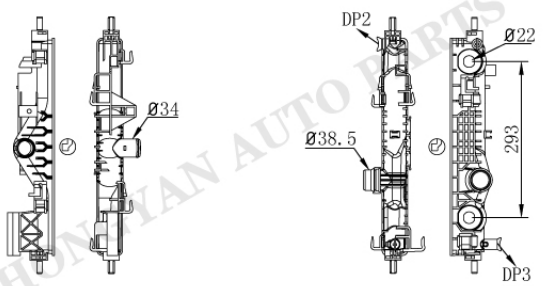

OP-0118AT/MT

Tank size :(R10×5×4×48×408)
OEM :1300338 1300348
DPI :
NISSENS :630762
APPLICATION :
12-15 OPEL ASTRA 1.6L
13-15 OPEL CASCADA 1.6L
13-15 OPEL INSIGNIA 1.6L
12-15 OPEL ZAFIRA TOURER 1.6L

HONGYAN AUTO PARTS

OPEL

OP-0119AT/MT

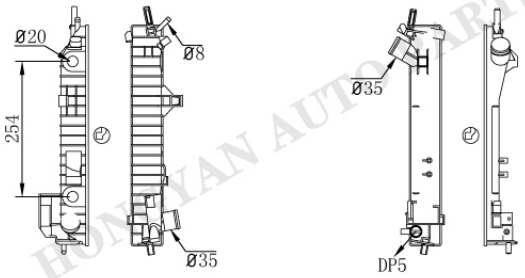

OP-0120

Tank size :(R5×4×5×60×415)
OEM :1300247/74/77 12805057
24418342/44/63 51770411
DPI :2810
NISSENS :63023A
APPLICATION :
03-08 OPEL SIGNUM 2.0/2.2/3.2L
03-08 OPEL VECTRA 2.2/3.2L
02-15 SAAB 9-3 2.0L
02-15 SAAB 9-3X 2.0L

OP-0121

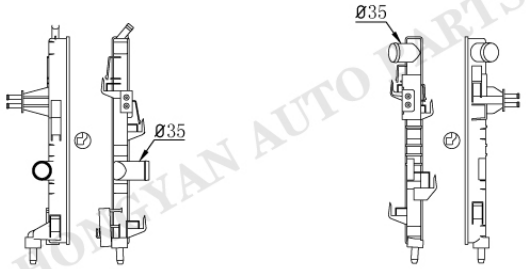

OP-0122

Tank size :(R5.5×3×5×32×390)
OEM :
DPI :
NISSENS :
APPLICATION :
OPEL

OP-0123

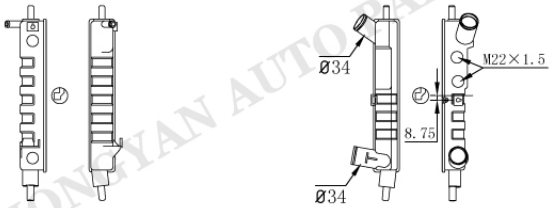

OP-0124

Tank size :(R5×5×4.5×48.5×287)
OEM :1300292/205 1300174/5
DPI :
NISSENS :63297 63298
APPLICATION :
93- OPEL CORSA B

OP-0125

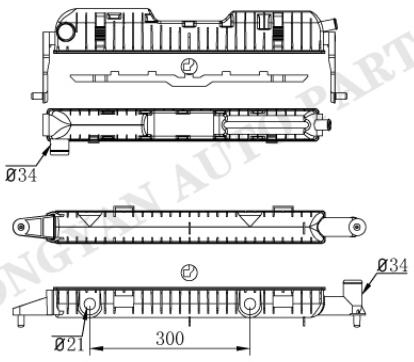

OP-0126AT/MT

Tank size :(R6.5×4.5×5×59×510)
OEM :90231318
DPI :
NISSENS :
APPLICATION :
86-93 OPEL OMEGA 1.8L

HONGYAN AUTO PARTS

OPEL

OP-0127

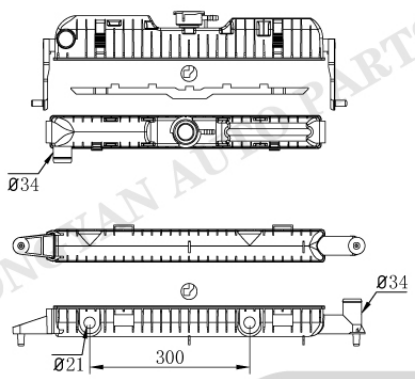

OP-0126AT/MT

Tank size :(R6.5×4.5×5×59×510)
OEM :90280692 1300011
DPI :
NISSENS :
APPLICATION :
86-93 OPEL OMEGA 1.8L

OP-0128

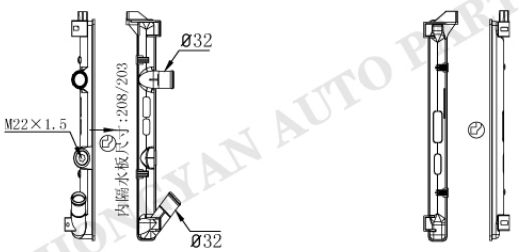

OP-0129

Tank size :(R9×4×5.5×42×416)
OEM :
DPI :
NISSENS :
APPLICATION :
98- OPEL MOVANO A 1.9/2.2/2.5L(DIESEL)

OP-0130

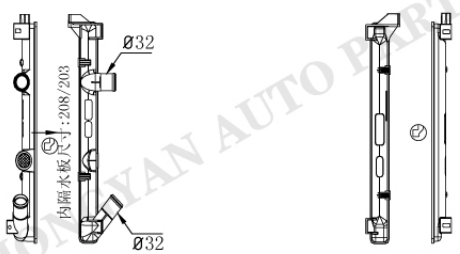

OP-0129

Tank size :(R9×4×5.5×42×416)
OEM :4415064/6/8 93179722/29/41
DPI :
NISSENS :63819 63824A
APPLICATION :
98- OPEL MOVANO A 1.9/2.2/2.5L(DIESEL)

OP-0131

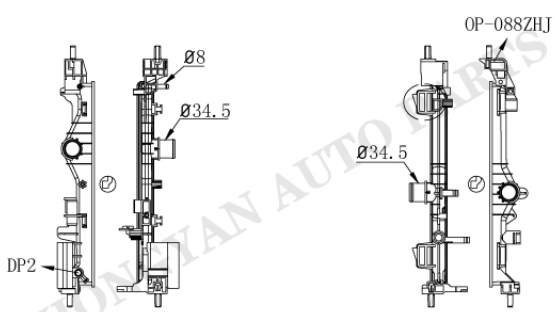

OP-0132

Tank size :(R9.5×4×5×31.5×387)
OEM :1300363
DPI :
NISSENS :630783
APPLICATION :
14- OPEL CORSA E

HONGYAN AUTO PARTS

OPEL

OP-0131

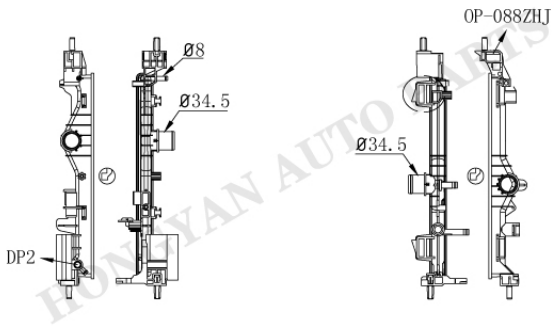

OP-0133

Tank size :(R9.5×4×5×31.5×387)
OEM :1300368
DPI :
NISSENS :630785
APPLICATION :
14- OPEL CORSA E

OP-0131

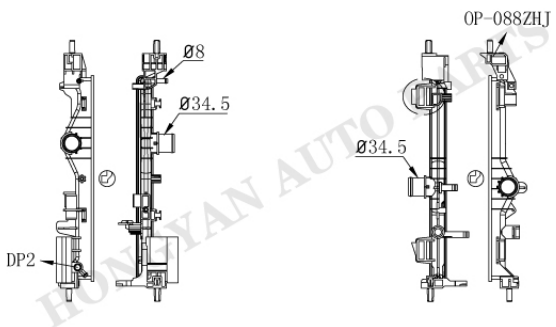

OP-0134

Tank size :(R9.5×4×5×31.5×387)
OEM :1300361
DPI :
NISSENS :630786
APPLICATION :
14- OPEL CORSA E

OP-0135

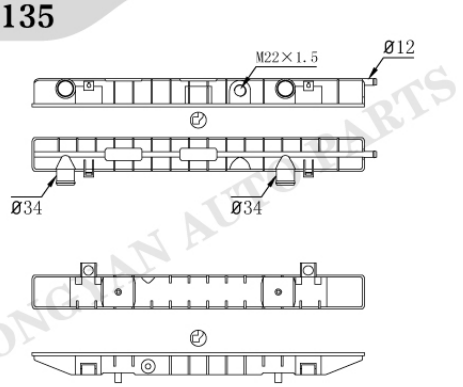

OP-0136

Tank size :(R6.5×5×6×64×625)
OEM :1300119/120/121
DPI :
NISSENS :63244 63245 63299
APPLICATION :
92- OPEL FRONTERA 2.0/2.4L
92- VAUXHALL FRONTERA 2.0/2.4L
89- ISUZU RODEO 2.0/2.4L

OP-0137

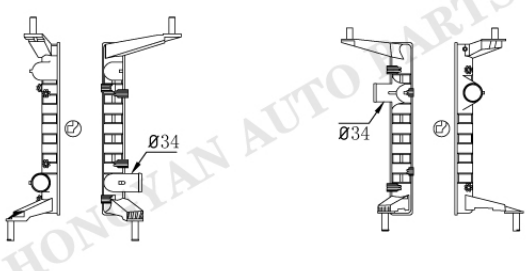

OP-0138

Tank size :(R5×4.2×5×47.5×323.6)
OEM :9333757415
DPI :
NISSENS :
APPLICATION :
06- CELTA

HONGYAN AUTO PARTS

OPEL

OP-0139

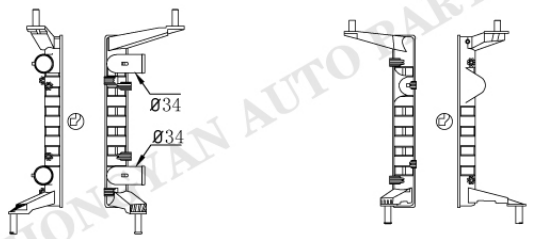

OP-0140

Tank size :(R5×4.2×5×47.5×323.6)
OEM :
DPI :
NISSENS :
APPLICATION :
06- CELLA

OP-0141

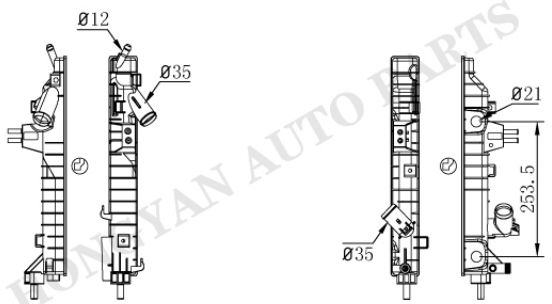

OP-0142AT/MT

Tank size :(R5×3.5×5.5×54.5×412.5)
OEM :
DPI :
NISSENS :
APPLICATION :
05- OPEL ZAFIRA 1.9L

OP-0143AT/MT

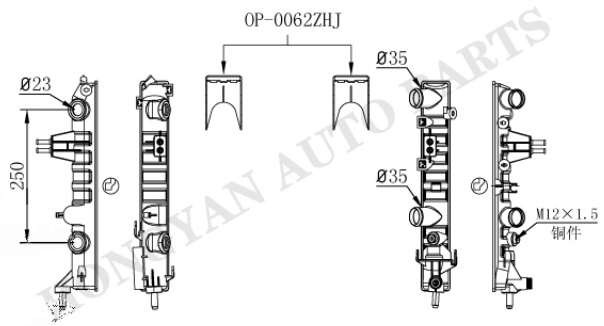

OP-0144

Tank size :(R5.5×5×5×55×395)
OEM :
DPI :
NISSENS :
APPLICATION :
98- OPEL ASTRA 1.2L

OP-0062AT/MT

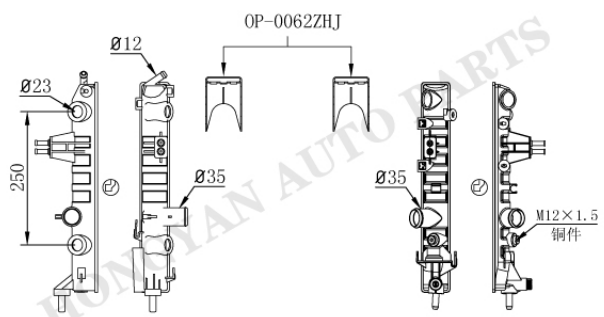

OP-0145

Tank size :(R5.5×5×5×55×395)
OEM :
DPI :
NISSENS :
APPLICATION :
99-05 OPEL ASTRA 2.0/2.2L
00-05 OPEL ZAFIRA 2.0/2.2L

HONGYAN AUTO PARTS

OPEL

OP-0146

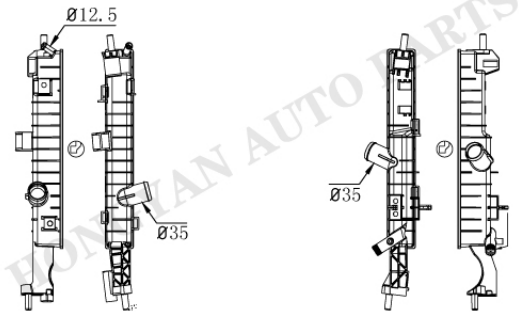

OP-0147

Tank size :(R4.5×5×5×54.5×374.5)
OEM :1300260
DPI :
NISSENS :
APPLICATION :
03- OPEL MERIVA 1.3L

OP-0071AT/MT

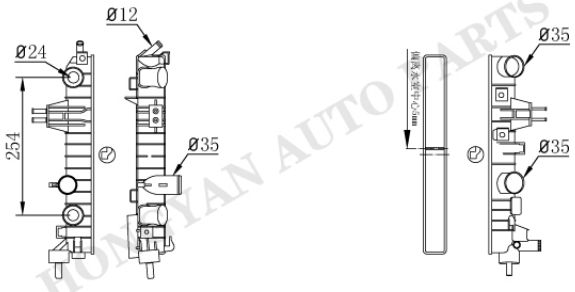

OP-0148

Tank size :(R4.5×3.2×5×54.5×374)
OEM :
DPI :
NISSENS :
APPLICATION :
04-14 OPEL ASTRA 1.2/1.4/1.8L
06-11 OPEL ZAFIRA 1.6L

OP-0149

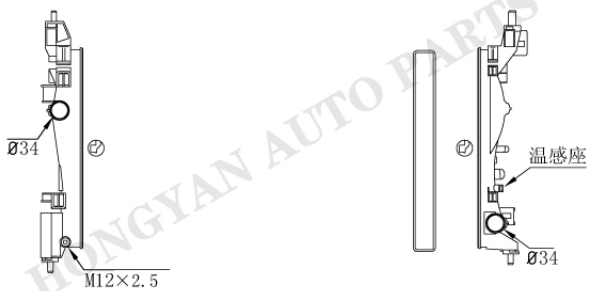

OP-0150

Tank size :(R11.5×4×5.6×42.5×378)
OEM :
DPI :
NISSENS :
APPLICATION :
OPEL

OP-0149

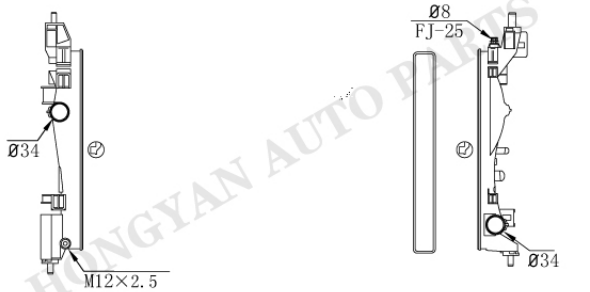

OP-0151

Tank size :(R11.5×4×5.6×42.5×378)
OEM :
DPI :
NISSENS :
APPLICATION :
OPEL

HONGYAN AUTO PARTS

OPEL

OP-0119AT/MT

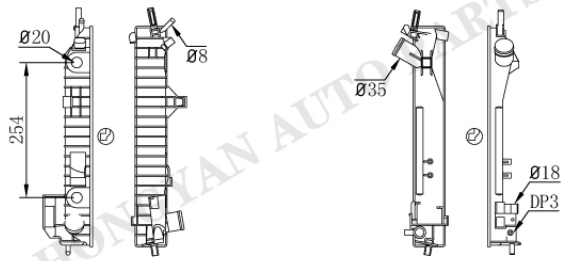

OP-0152

Tank size :(R5×4×5×60×415)
OEM :
DPI :
NISSENS :
APPLICATION :

OP-0153AT/MT



OP-0154

Tank size :(R××55×378)
OEM :1300197 1300213
DPI :
NISSENS :
APPLICATION :
ASTRAG

OP-0155



OP-0156

Tank size :(R6×4.5×3.6×42.4×389.5)
OEM :
DPI :
NISSENS :
APPLICATION :
ASTRAG

OP-0157

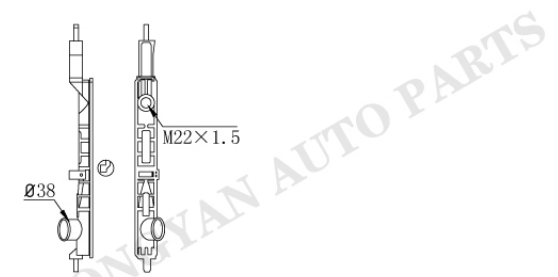

Tank size :(R6×4×6×46.5×338)
OEM :
DPI :
NISSENS :
APPLICATION :

HONGYAN AUTO PARTS

OPEL

OP-0159

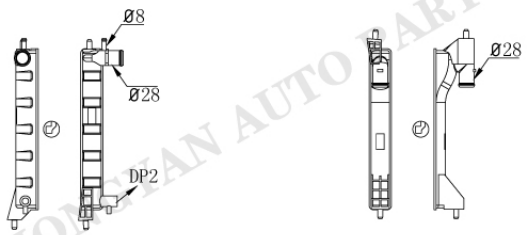

OP-0160

Tank size :(R8.5×5×4×42×302.5)
OEM :9204617 1770084E60
DPI :
NISSENS :630749
APPLICATION :
00- SUZUKI IGNIS 1.3L
00-03 SUZUKI WAGON 1.3L

Tank size :
OEM :
DPI :
NISSENS :
APPLICATION :

Tank size :
OEM :
DPI :
NISSENS :
APPLICATION :

Tank size :
OEM :
DPI :
NISSENS :
APPLICATION :

HONGYAN AUTO PARTS

PEUGEOT

PE-0001

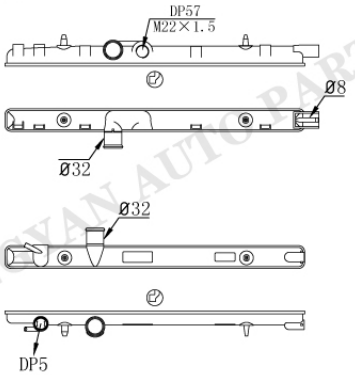

PE-0002

Tank size :(R11.5×4×5×42.5×563)
OEM :
DPI :
NISSENS :
APPLICATION :
98-13 PEUGEOT 206 1.4/1.6/1.9/2.0L
00-12 PEUGEOT 307 1.4/1.6/1.9/2.0L

PE-0001

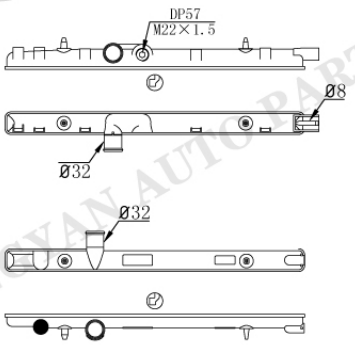

PE-0003

Tank size :(R11.5×4×5×42.5×563)
OEM :
DPI :
NISSENS :
APPLICATION :
98-13 PEUGEOT 206 1.4/1.6/1.9/2.0L
00-12 PEUGEOT 307 1.4/1.6/1.9/2.0L

PE-0004

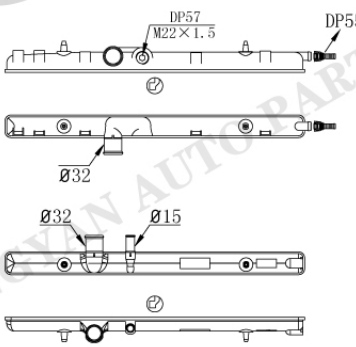

PE-0005

Tank size :(R11.5×4×5×42.5×563)
OEM :132322/38 133040/53/65/69
DPI :
NISSENS :63502 63502A
APPLICATION :
98-13 PEUGEOT 206 1.4/1.6/1.9/2.0L
00-12 PEUGEOT 307 1.4/1.6/1.9/2.0L
02-06 PEUGEOT GRAND RAID 1.4/1.6/1.9/2.0L
02-13 PEUGEOT PARTNER 1.4/1.6/1.9/2.0L

PE-0006

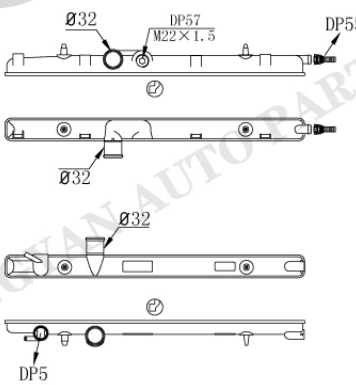

PE-0002

Tank size :(R11.5×4×5×42.5×563)
OEM :
DPI :
NISSENS :
APPLICATION :
98-13 PEUGEOT 206 1.4/1.6/1.9/2.0L
00-12 PEUGEOT 307 1.4/1.6/1.9/2.0L

HONGYAN AUTO PARTS

PEUGEOT

PE-0007

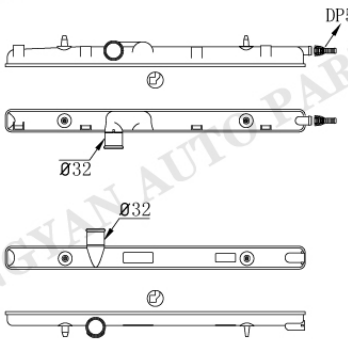

PE-0008

Tank size :(R11.5×4×5×42.5×563)
OEM :
DPI :
NISSENS :
APPLICATION :
98-13 PEUGEOT 206 1.4/1.6/1.9/2.0L
00-12 PEUGEOT 307 1.4/1.6/1.9/2.0L

PE-0009

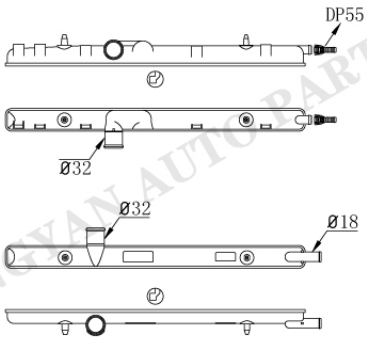

PE-0010

Tank size :(R11.5×4×5×42.5×563)
OEM :133082/G3/F4/83/G2
DPI :
NISSENS :
APPLICATION :
98-13 PEUGEOT 206 1.4/1.6/1.9/2.0L
00-12 PEUGEOT 307 1.4/1.6/1.9/2.0L

PE-0009

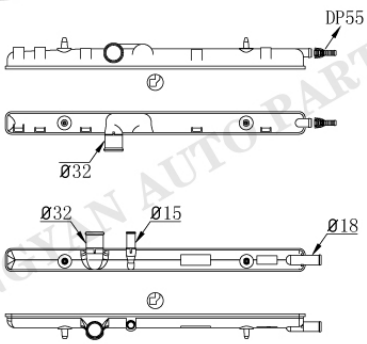

PE-0011

Tank size :(R11.5×4×5×42.5×563)
OEM :133096/F7/86
DPI :
NISSENS :63694A
APPLICATION :
98-13 PEUGEOT 206 1.4/1.6/1.9/2.0L
00-12 PEUGEOT 307 1.4/1.6/1.9/2.0L

PE-0012

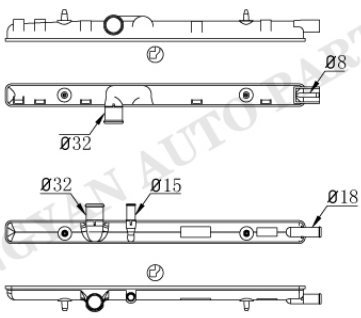

PE-0011

Tank size :(R11.5×4×5×42.5×563)
OEM :133084
DPI :
NISSENS :
APPLICATION :
98-13 PEUGEOT 206 1.4/1.6/1.9/2.0L
00-12 PEUGEOT 307 1.4/1.6/1.9/2.0L

HONGYAN AUTO PARTS

PEUGEOT

PE-0012

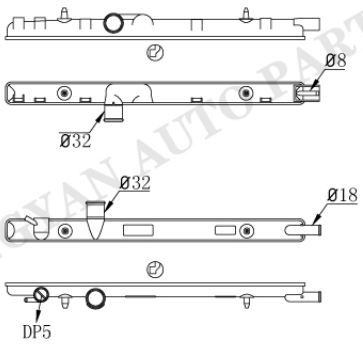

PE-0013

Tank size :(R11.5×4×5×42.5×563)
OEM :
DPI :
NISSENS :
APPLICATION :
98-13 PEUGEOT 206 1.4/1.6/1.9/2.0L
00-12 PEUGEOT 307 1.4/1.6/1.9/2.0L

PE-0012

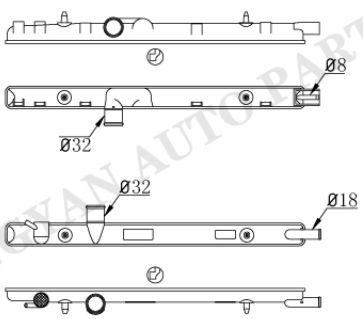

PE-0014

Tank size :(R11.5×4×5×42.5×563)
OEM :
DPI :
NISSENS :
APPLICATION :
98-13 PEUGEOT 206 1.4/1.6/1.9/2.0L
00-12 PEUGEOT 307 1.4/1.6/1.9/2.0L

PE-0015

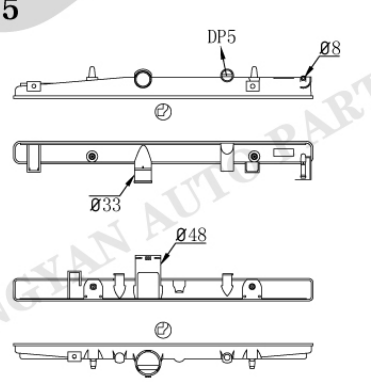

PE-0016

Tank size :(R11.5×4×5×42.5×563)
OEM :133068 1331GV/SQ 96361705
DPI :
NISSENS :61291A
APPLICATION :
99-04 PEUGEOT 406 1.8L

PE-0017

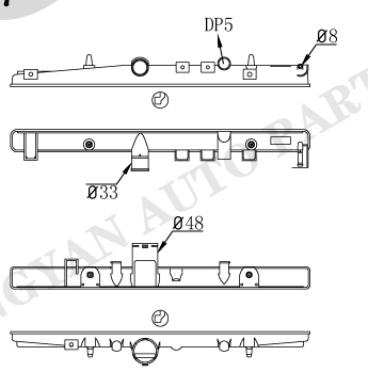

PE-0016

Tank size :(R11.5×4×5×42.5×563)
OEM :
DPI :
NISSENS :
APPLICATION :
99-04 PEUGEOT 406 1.8L

HONGYAN AUTO PARTS

PE-0015

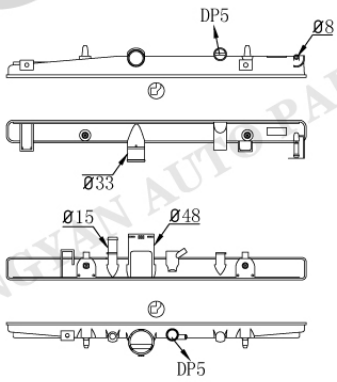

PE-0018

Tank size :(R11.5×4×5×42.5×563)
OEM :
DPI :
NISSENS :61292A
APPLICATION :
99-04 PEUGEOT 406 2.0L

PE-0015

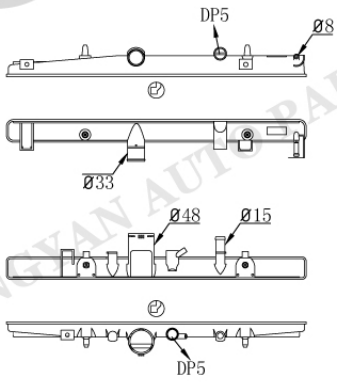

PE-0019

Tank size :(R11.5×4×5×42.5×563)
OEM :
DPI :
NISSENS :
APPLICATION :
99-04 PEUGEOT 406 2.0L

PE-0015

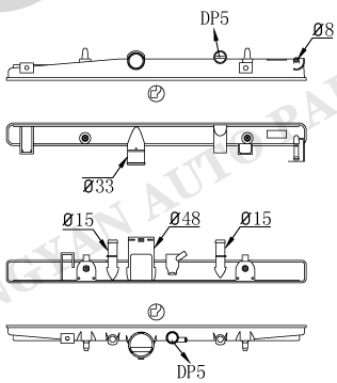

PE-0020

Tank size :(R11.5×4×5×42.5×563)
OEM :
DPI :
NISSENS :
APPLICATION :
99-04 PEUGEOT 406 2.0L

PE-0021

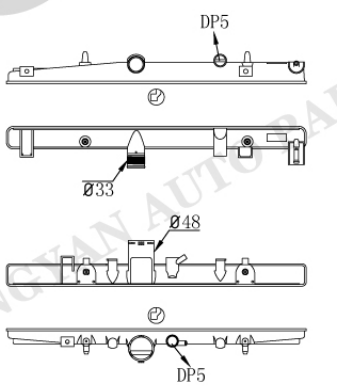

PE-0022

Tank size :(R11.5×4×5×42.5×563)
OEM :1330063/A0/R 1331FT 96326044
DPI :
NISSENS :63705A 63702 63703
APPLICATION :
99-04 PEUGEOT 406 2.0L
00-05 PEUGEOT 607 2.0L

HONGYAN AUTO PARTS

PEUGEOT

PE-0021

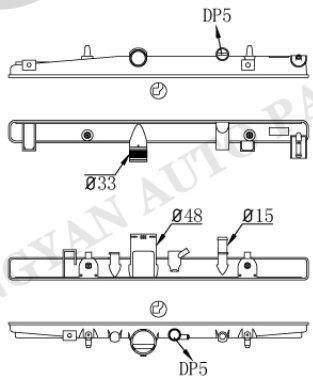

PE-0023

Tank size :(R11.5×4×5×42.5×563)
OEM :
DPI :
NISSENS :
APPLICATION :
99-04 PEUGEOT 406 2.0L
00-05 PEUGEOT 607 2.0L

PE-0021

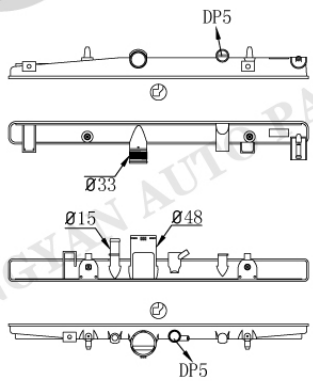

PE-0024

Tank size :(R11.5×4×5×42.5×563)
OEM :
DPI :
NISSENS :
APPLICATION :
99-04 PEUGEOT 406 2.0L
00-05 PEUGEOT 607 2.0L

PE-0021

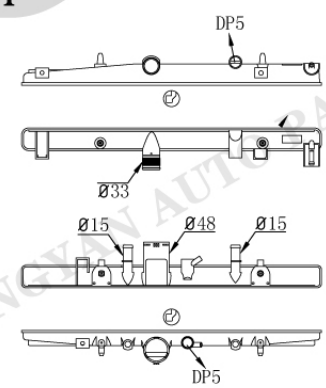

PE-0025

Tank size :(R11.5×4×5×42.5×563)
OEM :
DPI :
NISSENS :
APPLICATION :
99-04 PEUGEOT 406 2.0L
00-05 PEUGEOT 607 2.0L

PE-0021

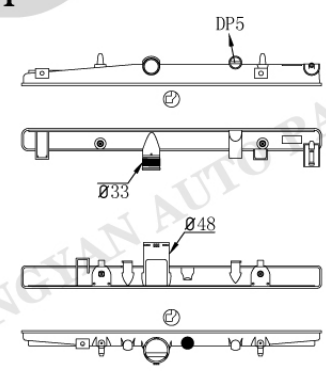

PE-0026

Tank size :(R11.5×4×5×42.5×563)
OEM :
DPI :
NISSENS :
APPLICATION :
99-04 PEUGEOT 406 2.0L
00-05 PEUGEOT 607 2.0L

HONGYAN AUTO PARTS

PE-0027

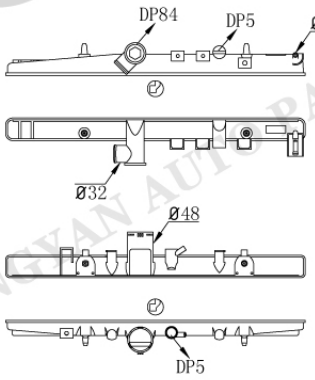

PE-0028

Tank size :(R11.5×4×5×42.5×563)
OEM :133078/Q4 1331KV 133366
DPI :
NISSENS :61294A
APPLICATION :
00-10 PEUGEOT 607 2.2L(DIESEL)

PE-0027

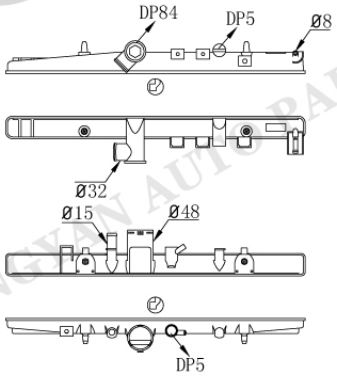

PE-0018

Tank size :(R11.5×4×5×42.5×563)
OEM :133079 1330Q6 1331LC
DPI :
NISSENS :61295A
APPLICATION :
00-05 PEUGEOT 607 2.2L(DIESEL)

PE-0029

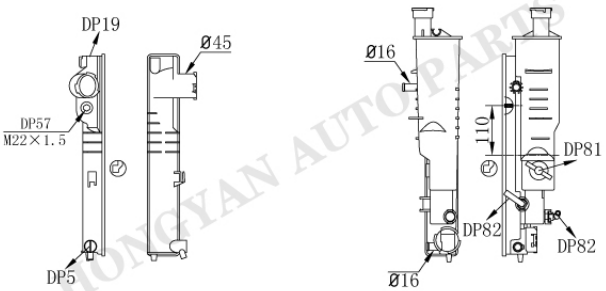

PE-0030

Tank size :(R8×4×5×61×379)
OEM :1301G7
DPI :
NISSENS :63514
APPLICATION :
92-99 PEUGEOT 405 1.6/1.8/2.0L

PE-0029

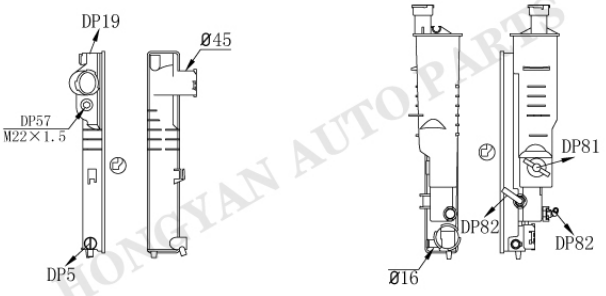

PE-0031

Tank size :(R8×4×5×61×379)
OEM :1301JL 1301JP
DPI :
NISSENS :63545
APPLICATION :
92-97 PEUGEOT 405 2.0L

HONGYAN AUTO PARTS

PEUGEOT

PE-0032

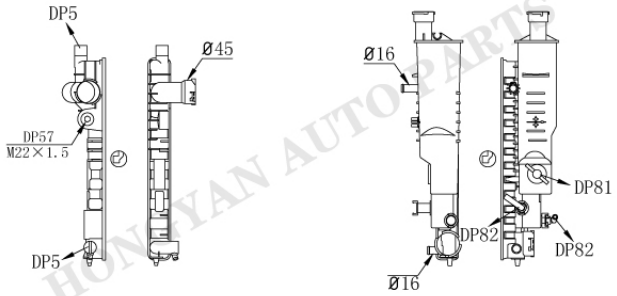

PE-0033

Tank size :(R11.5×4×5×42.5×379)
OEM :1301G8
DPI :
NISSENS :
APPLICATION :
92-97 PEUGEOT 405 1.6/1.8/2.0L

PE-0032

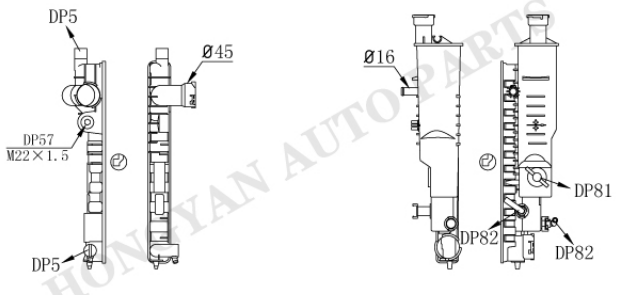

PE-0034

Tank size :(R11.5×4×5×42.5×379)
OEM :
DPI :
NISSENS :
APPLICATION :
92-97 PEUGEOT 405 1.6/1.8/2.0L

PE-0032

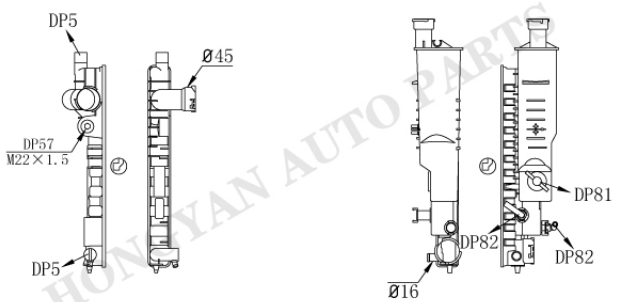

PE-0035

Tank size :(R11.5×4×5×42.5×379)
OEM :1301E6/G3/JQ/G4
DPI :
NISSENS :63524
APPLICATION :
92-97 PEUGEOT 405 1.6/1.8/2.0L

PE-0032

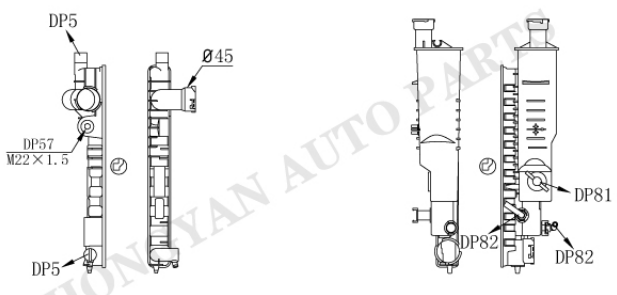

PE-0036

Tank size :(R11.5×4×5×42.5×379)
OEM :
DPI :
NISSENS :
APPLICATION :
92-97 PEUGEOT 405 1.6/1.8/2.0L

HONGYAN AUTO PARTS

PEUGEOT

PE-0037

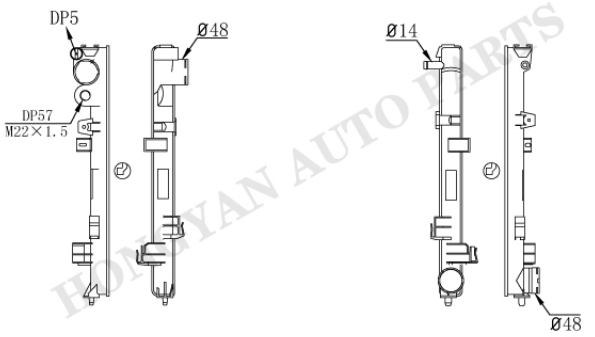

PE-0038

Tank size :(R12×5×5×42.5×470.5)
OEM :1301P2/P3/W1/W2/W3/W4/W5/W6
1301Y4/Y6/Y7/Y9/Z0/Z1/Z2
DPI :
NISSENS :61875A
APPLICATION :
94-02 PEUGEOT 806 1.8/2.0L
96-07 PEUGEOT EXPERT 1.6/1.8/2.0L

PE-0039

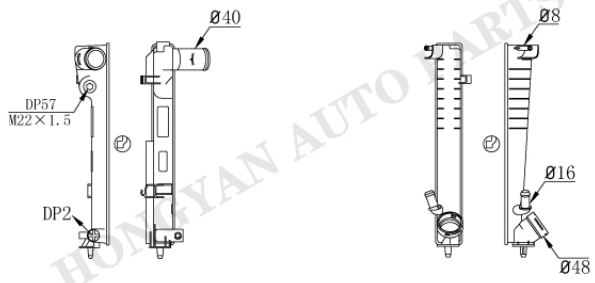

PE-0040

Tank size :(R11.5×4×4.5×42.5×379)
OEM :133041/42/55/57/58/C9/E1
1331CW/EQ/FG/Y8/ZT 96347974
DPI :
NISSENS :61315 61326A
APPLICATION :
98-02 PEUGEOT PARTNER 1.8/1.9/2.0L
97-02 PEUGEOT 306 1.8/1.9/2.0L

PE-0041

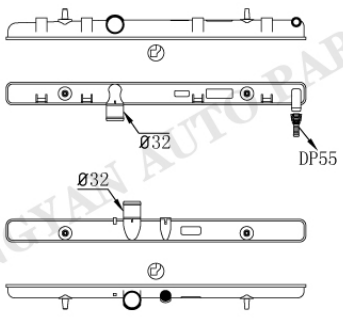

PE-0042

Tank size :(R11.5×4×5×42.5×563)
OEM :133089/F5/J7/S5/S8/W2/Y5
133308/38/87/91
DPI :
NISSENS :63606A
APPLICATION :
09-15 PEUGEOT 3008
03-11 PEUGEOT 307
07-15 PEUGEOT 308
04-15 PEUGEOT 407
11-14 PEUGEOT EXPERT

PE-0041

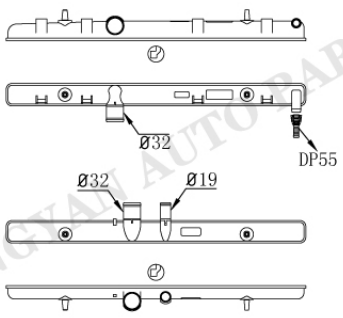

PE-0043

Tank size :(R11.5×4×5×42.5×563)
OEM :
DPI :
NISSENS :
APPLICATION :
09-15 PEUGEOT 3008
03-11 PEUGEOT 307
07-15 PEUGEOT 308
04-15 PEUGEOT 407
11-14 PEUGEOT EXPERT

HONGYAN AUTO PARTS

PEUGEOT

PE-0044

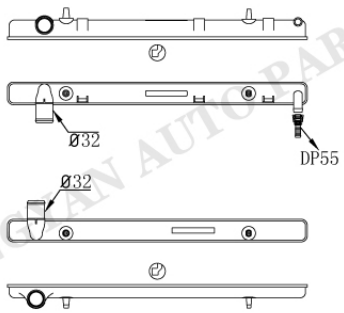

PE-0045

Tank size :(R11.5×4×5×42.5×563)
OEM :1330K1/S0/W4 133343/88
DPI :
NISSENS :63601
APPLICATION :
05-13 PEUGEOT 307
08-13 PEUGEOT 308

PE-0046

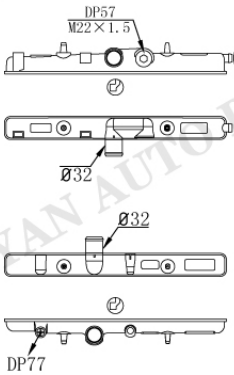

PE-0047

Tank size :(R11×4.5×5×43×415.5)
OEM :133037/B3/B4/F9/H2
1331X5 133312 133324
DPI :
NISSENS :63708A
APPLICATION :
98-12 PEUGEOT 206 1.1/1.4/1.6L

PE-0048

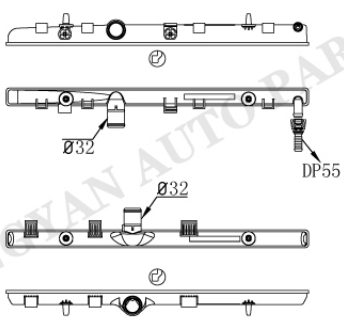

PE-0049

Tank size :(R6.5×4.3×5.5×33.5×567.8)
OEM :
DPI :
NISSENS :
APPLICATION :
PEUGEOT

PE-0050

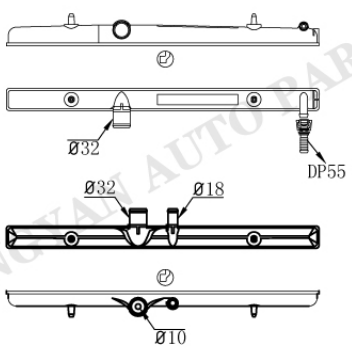

PE-0051

Tank size : (R5.5×4×5.5×41.6×586.5)
OEM :
DPI :
NISSENS :
APPLICATION :
PEUGEOT

PE-9

PE-0050

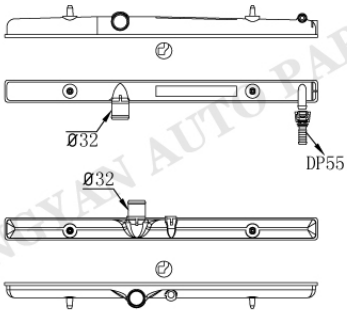

Tank size : (R5.5×4×5.5×41.6×586.5)
OEM :
DPI :
NISSENS :
APPLICATION :
PEUGEOT

PE-0052

PE-0053

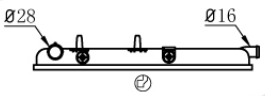

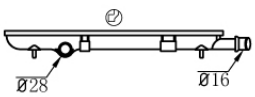

Tank size : (R6.5×4×5×42×409.5)
OEM :1330C0/C2/J2/N6/Q0/S1/W8
133365 133395 9638520280
DPI :
NISSENS :61284
APPLICATION :
05-10 PEUGEOT 1007 1.4/1.6L
06-14 PEUGEOT 207 1.4/1.6L

PE-0054

PE-0053

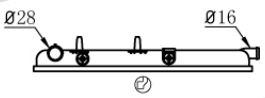

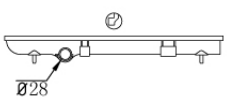

Tank size : (R6.5×4×5×42×409.5)
OEM :1330E6 1330Q5
DPI :
NISSENS :61278
APPLICATION :
05-10 PEUGEOT 1007 1.4/1.6L

PE-0055

PE-0053

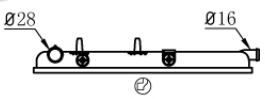

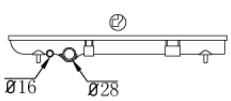

Tank size : (R6.5×4×5×42×409.5)
OEM :1330C1 1331TT
DPI :
NISSENS :61279
APPLICATION :
02-10 CITROEN C3 1.4/1.6L

PE-0056

HONGYAN AUTO PARTS

PEUGEOT

PE-0057

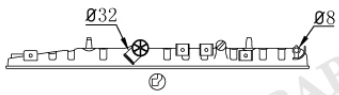

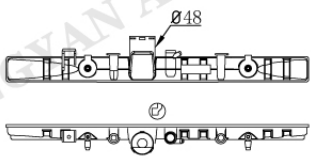

Tank size :(R5.5×4×5×47.5×568)
OEM :
DPI :
NISSENS :
APPLICATION :
99-04 PEUGEOT 406 2.0L

PE-0058

PE-0059

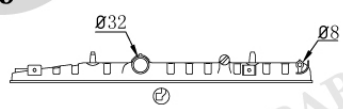

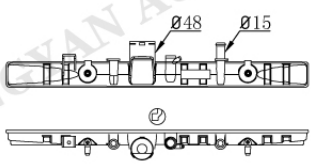

Tank size :(R5.5×4×5×47.5×568)
OEM :
DPI :
NISSENS :
APPLICATION :
99-04 PEUGEOT 406 2.0L

PE-0060

PE-0061

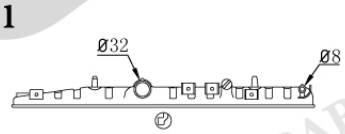

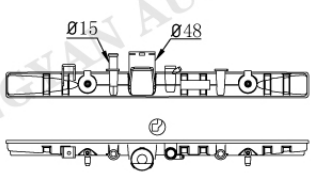

Tank size :(R5.5×4×5×47.5×568)
OEM :
DPI :
NISSENS :
APPLICATION :
99-04 PEUGEOT 406 2.0L

PE-0062

PE-0061

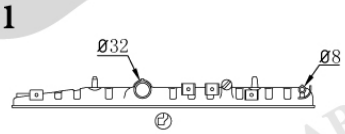

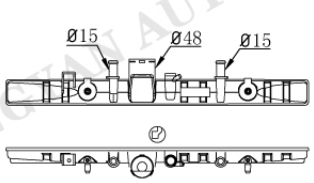

Tank size :(R5.5×4×5×47.5×568)
OEM :
DPI :
NISSENS :
APPLICATION :
99-04 PEUGEOT 406 2.0L

PE-0063

HONGYAN AUTO PARTS

PE-11

PEUGEOT

PE-0064



PE-0065

Tank size :(R3.5×5×4.5×48×280)
OEM :1300K6 1300K8 1300X1
DPI :
NISSENS :63709
APPLICATION :
83-99 PEUGEOT 205 1.3/1.4/1.6L

PE-0066



PE-0067

Tank size :(R6×4.5×5.2×50.5×301.5)
OEM :1300K5 1331QY
DPI :
NISSENS :63729A
APPLICATION :
83-99 PEUGEOT 205 1.9L

PE-0068

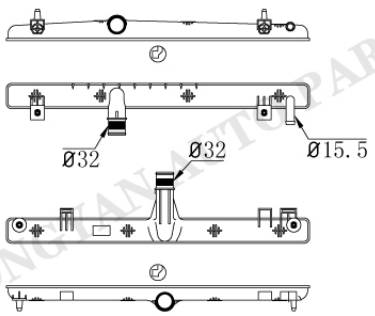

PE-0069

Tank size :(R10×4.8×4.5×47.5×569)
OEM :1330W5 133396
DPI :
NISSENS :636008 636009
APPLICATION :
09-14 PEUGEOT 407
10-15 PEUGEOT 508

PE-0070

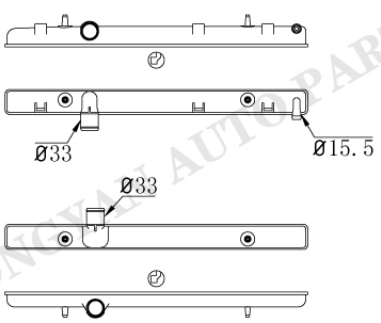

PE-0071

Tank size :(R9×4×5×47.5×567.5)
OEM :1330K0
DPI :
NISSENS :
APPLICATION :

HONGYAN AUTO PARTS

PEUGEOT

PE-0072

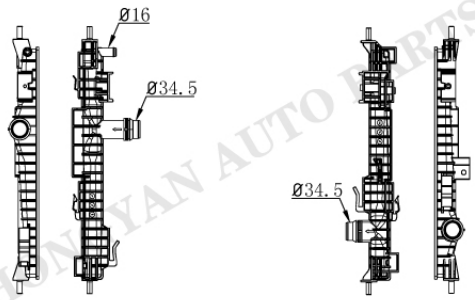

PE-0073

Tank size :(R5.5×4×5.5×42×436)
OEM :
DPI :
NISSENS :
APPLICATION :
PEUGEOT 408

PE-0074

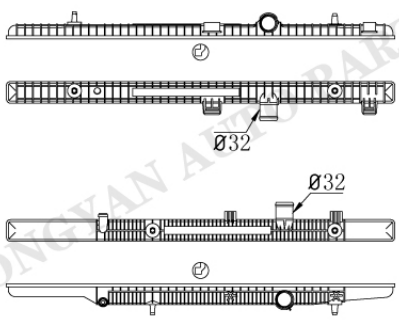

PE-0075

Tank size :(R8×4.3×5.5×40.5×729.3)
OEM :
DPI :
NISSENS :
APPLICATION :

PE-0076

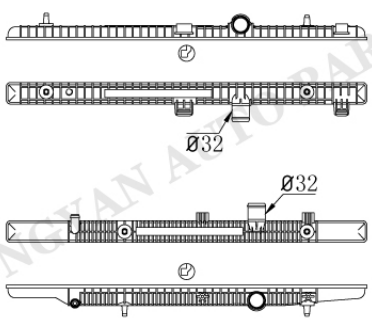

PE-0077

Tank size :(R8×4.3×5.5×40.5×677)
OEM :
DPI :
NISSENS :
APPLICATION :

PE-0078

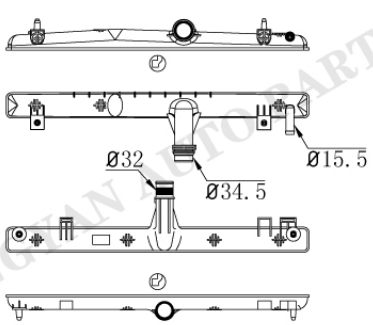

PE-0069

Tank size :(R10×4.8×4.5×47.5×569)
OEM :1330W5 133396
DPI :
NISSENS :636008 636009
APPLICATION :
09-14 PEUGEOT 407
10-15 PEUGEOT 508

PE-13

HONGYAN AUTO PARTS

PEUGEOT

PE-0079

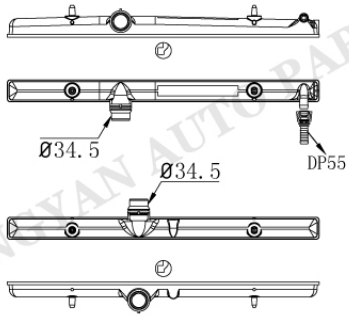

PE-0080

Tank size :(R5.5×4×5.5×41.6×586.5)
OEM :
DPI :
NISSENS :
APPLICATION :
PEUGEOT

PE-0081

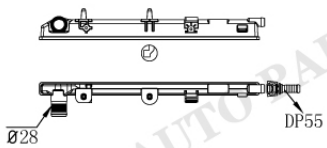

Tank size :(R5×2.5×5.5×24×414)
OEM :
DPI :
NISSENS :
APPLICATION :
PEUGEOT

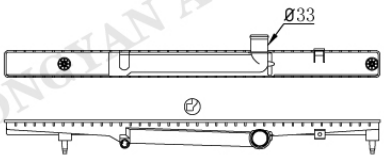

PE-0084

Tank size :(R8×4×5×50.5×707)
OEM :133080/81 1331LK/LP/LC
133367
DPI :
NISSENS :61296 61297
APPLICATION :
PEUGEOT

PE-0029

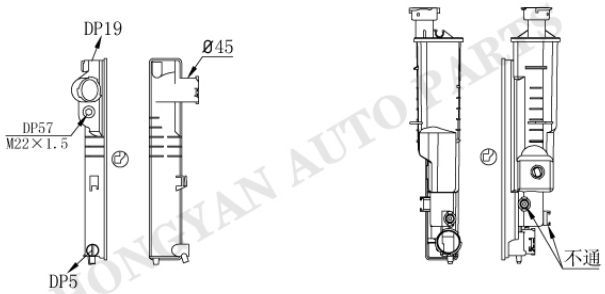

PE-0085

Tank size :(R8×4×5×61×379)
OEM :
DPI :
NISSENS :
APPLICATION :
92-99 PEUGEOT 405 1.6/1.8/2.0L

HONGYAN AUTO PARTS

PEUGEOT

PE-0086

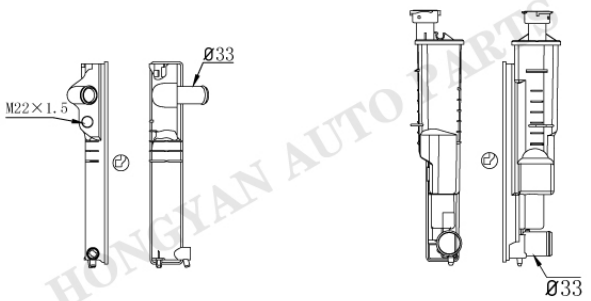

PE-0087

Tank size :(R8×4×6×61×381)
OEM :
DPI :
NISSENS :
APPLICATION :
92- PEUGEOT 405

PE-0088

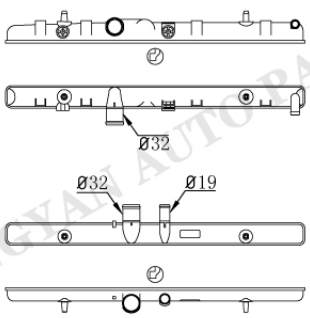

PE-0043

Tank size :(R11.5×4×5×42.5×563)
OEM :
DPI :
NISSENS :
APPLICATION :
09-15 PEUGEOT 3008
03-11 PEUGEOT 307
07-15 PEUGEOT 308
04-15 PEUGEOT 407
11-14 PEUGEOT EXPERT

PE-0041

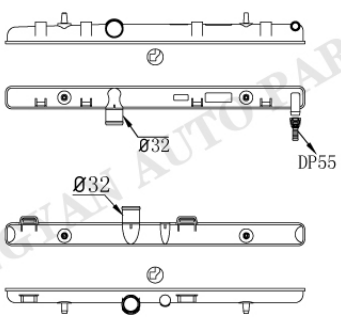

PE-0089

Tank size :(R11.5×4×5×42.5×563)
OEM :
DPI :
NISSENS :
APPLICATION :
09-15 PEUGEOT 3008
03-11 PEUGEOT 307
07-15 PEUGEOT 308
04-15 PEUGEOT 407
11-14 PEUGEOT EXPERT

PE-0090

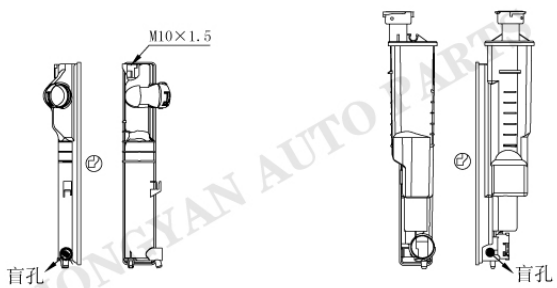

PE-0091

Tank size :(R8×4×6×61×379)
OEM :
DPI :
NISSENS :
APPLICATION :
PEUGEOT

HONGYAN AUTO PARTS

PE-0092 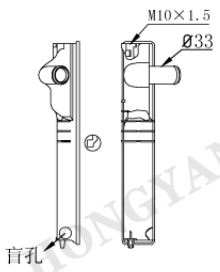 	Tank size :(R8×4×6×61×381) OEM : DPI : NISSENS : APPLICATION : PEUGEOT
	Tank size : OEM : DPI : NISSENS : APPLICATION :
	Tank size : OEM : DPI : NISSENS : APPLICATION :
	Tank size : OEM : DPI : NISSENS : APPLICATION :

HONGYAN AUTO PARTS

	Tank size : OEM : DPI : NISSENS : APPLICATION :
	Tank size : OEM : DPI : NISSENS : APPLICATION :
	Tank size : OEM : DPI : NISSENS : APPLICATION :
	Tank size : OEM : DPI : NISSENS : APPLICATION :

HONGYAN AUTO PARTS

	Tank size : OEM : DPI : NISSENS : APPLICATION :
	Tank size : OEM : DPI : NISSENS : APPLICATION :
	Tank size : OEM : DPI : NISSENS : APPLICATION :
	Tank size : OEM : DPI : NISSENS : APPLICATION :

HONGYAN AUTO PARTS

PORSCHE

PO-0001

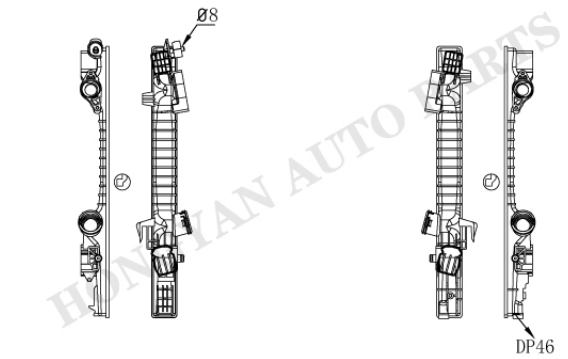

PO-0002

Tank size :(R5.5×3.9×5.4×47.5×508.3)
OEM :
DPI :
NISSENS :63779
APPLICATION :
09-15 PORSCHE PANAMERA 3.0/3.6/4.8L

PO-0003



PO-0004AT/MT

Tank size :(R9×4×5×48×371)
OEM :
DPI :490 491
NISSENS :63756 63750 63755
APPLICATION :
83-87 PORSCHE 944 2.5L

Tank size :
OEM :
DPI :
NISSENS :
APPLICATION :

Tank size :
OEM :
DPI :
NISSENS :
APPLICATION :

HONGYAN AUTO PARTS

RENAULT

RE-0001

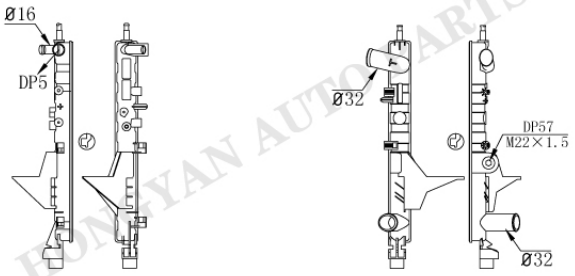

RE-0002

Tank size :(R11×4×5.5×42.5×377.5)
OEM :7701042436
DPI :
NISSENS :63856
APPLICATION :
93-96 RENAULT TWINGO 1.0L

RE-0003

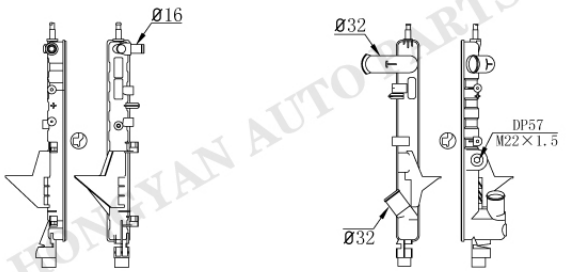

RE-0004

Tank size :(R11×4×5.5×42.5×377.5)
OEM :7701036152 7701352365
DPI :
NISSENS :63949
APPLICATION :
93-96 RENAULT TWINGO 1.2L

RE-0005

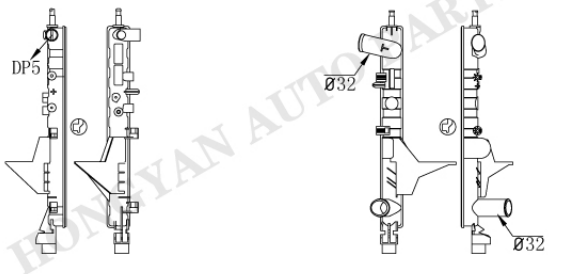

RE-0006

Tank size :(R11×4×5.5×42.5×377.5)
OEM :
DPI :
NISSENS :
APPLICATION :
93-96 RENAULT TWINGO 1.2L

RE-0007

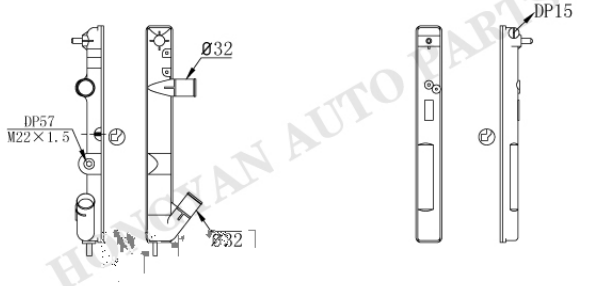

RE-0008

Tank size :(R10×5×5×49×407)
OEM :7701046210
DPI :
NISSENS :
APPLICATION :
98-03 RENAULT MASTER 1.9L(DIESEL)

HONGYAN AUTO PARTS

RENAULT

RE-0009

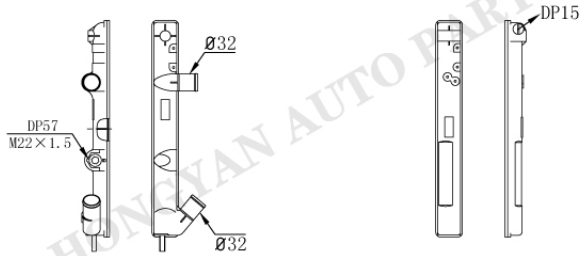

RE-0010

Tank size :(R10×5×5×49×407)
OEM :2140000QAH 4501137 4502435 7701043693/6210 7701499797
DPI :
NISSENS :63936A
APPLICATION :
98-03 RENAULT MASTER 2.8L(DIESEL)
97-01 OPEL ARENA 2.5/2.8L
98-03 OPEL MOVANO 2.5/2.8L

RE-0011

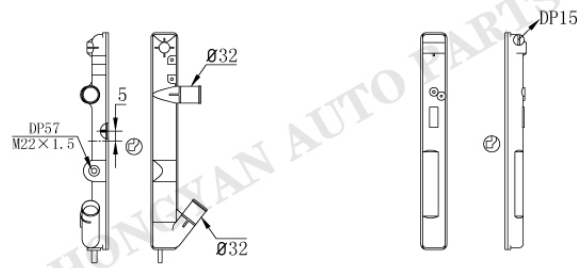

RE-0012

Tank size :(R10×5×5×49×407)
OEM :7700417175 836304
DPI :
NISSENS :
APPLICATION :
98- RENAULT CLIO 1.9L

RE-0013

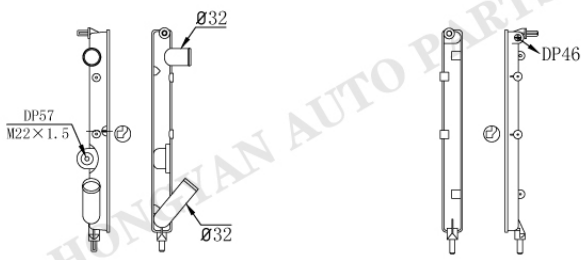

RE-0014

Tank size :(R12×4×5×38×380)
OEM :7700786444/7886 7701395092
DPI :
NISSENS :63924
APPLICATION :
90-98 RENAULT CLIO 1.4L
91-98 RENAULT EXTRA 1.4L
89-01 RENAULT R19 1.4/1.7L

RE-0015

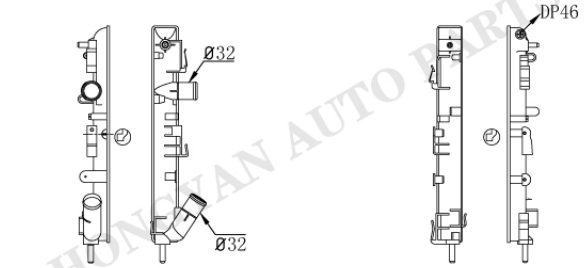

RE-0016

Tank size :(R10×5×5×49×407)
OEM :
DPI :
NISSENS :
APPLICATION :
RENAULT

HONGYAN AUTO PARTS

RE-0017

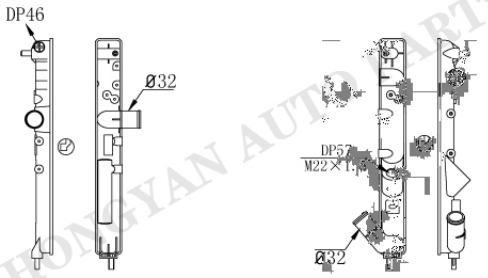

RE-0018

Tank size :(R10×5×5×49×407)
OEM :7700803753
DPI :
NISSENS :63878
APPLICATION :
91-98 RENAULT CLIO 1.8L

RE-0019

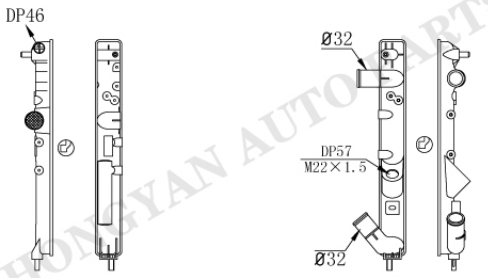

RE-0020

Tank size :(R10×5×5×49×407)
OEM :
DPI :
NISSENS :
APPLICATION :
91-98 RENAULT CLIO 1.8L

RE-0021

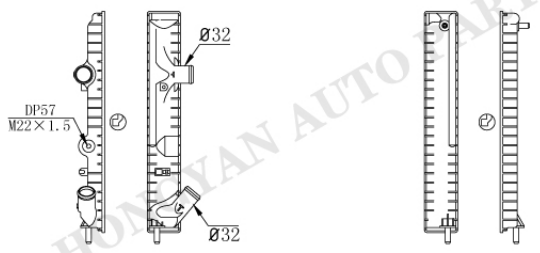

RE-0022

Tank size :(R5×5×5×62.5×415.5)
OEM :7700836304
DPI :
NISSENS :
APPLICATION :
98- RENAULT CLIO 1.9L

RE-0021

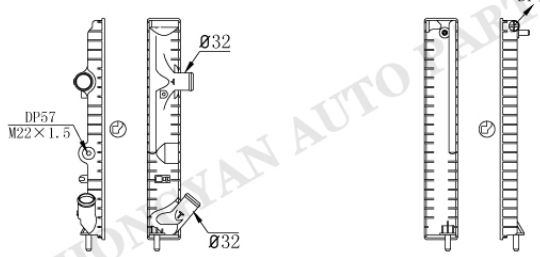

RE-0023

Tank size :(R5×5×5×62.5×415.5)
OEM :
DPI :
NISSENS :
APPLICATION :
98- RENAULT CLIO 1.9L

RENAULT

RE-0024

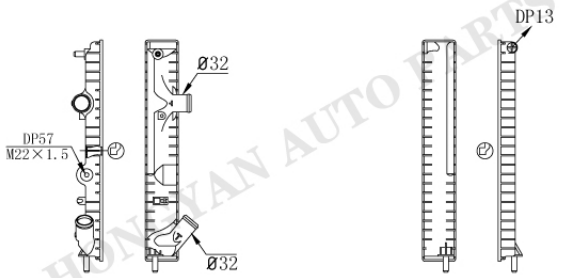

RE-0025

Tank size :(R5×5×5×62.5×415.5)
OEM :
DPI :
NISSENS :
APPLICATION :
98- RENAULT MEGANE 1.9L

RE-0026

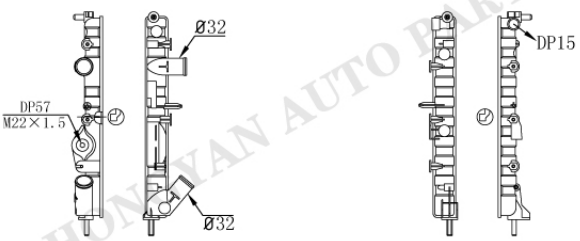

RE-0027

Tank size :(R8×5×5×42.5×378)
OEM :7700838134 7701352603
DPI :
NISSENS :639371
APPLICATION :
95-02 RENAULT CLIO 1.2/1.6/1.6L
95-02 RENAULT MEGANE 1.2/1.6/1.6L
95-02 RENAULT KANGOO 1.2/1.6/1.6L

RE-0028

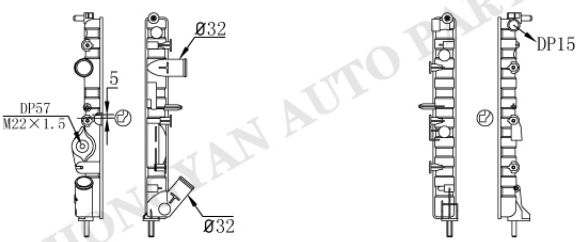

RE-0027

Tank size :(R8×5×5×42.5×378)
OEM :
DPI :
NISSENS :
APPLICATION :
95-02 RENAULT CLIO 1.2/1.6/1.6L
95-02 RENAULT MEGANE 1.2/1.6/1.6L
95-02 RENAULT KANGOO 1.2/1.6/1.6L

RE-0029

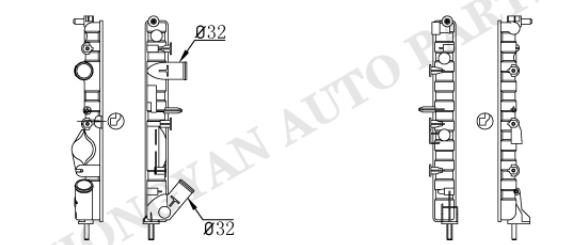

RE-0030

Tank size :(R8×5×5×42.5×378)
OEM :7700314382 7701499975
DPI :
NISSENS :63884
APPLICATION :
95-02 RENAULT CLIO 1.2/1.6/1.6L
95-02 RENAULT MEGANE 1.2/1.6/1.6L
95-02 RENAULT KANGOO 1.2/1.6/1.6L

HONGYAN AUTO PARTS

RE-0031

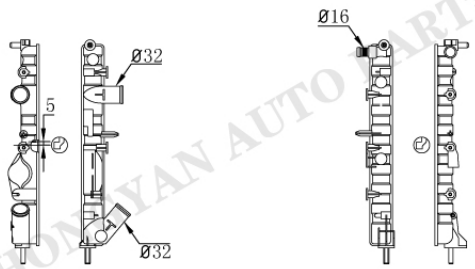

RE-0032

Tank size :(R8×5×5×42.5×378)
OEM :
DPI :
NISSENS :
APPLICATION :
95-02 RENAULT CLIO 1.2/1.6/1.6L
95-02 RENAULT MEGANE 1.2/1.6/1.6L
95-02 RENAULT KANGOO 1.2/1.6/1.6L

RE-0033

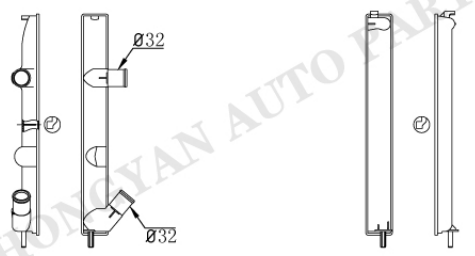

RE-0034

Tank size :(R5×5×5×49×415)
OEM :7700430143 7700430648
DPI :
NISSENS :63886
APPLICATION :
98-01 RENAULT CLIO 1.2/1.4L
97-01 RENAULT KANGOO 1.2/1.4L

RE-0033

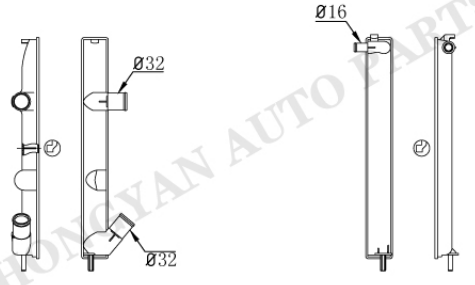

RE-0035

Tank size :(R5×5×5×49×415)
OEM :
DPI :
NISSENS :
APPLICATION :
98-01 RENAULT CLIO 1.2/1.4L
97-01 RENAULT KANGOO 1.2/1.4L

RE-0036

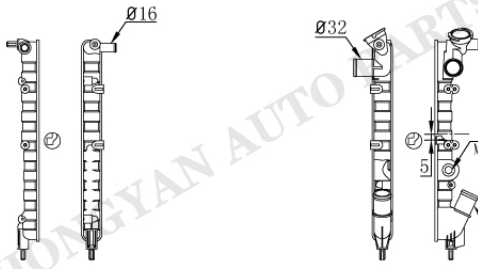

RE-0037

Tank size :(R13.5×5×5×38×378)
OEM :7701034767
DPI :
NISSENS :
APPLICATION :
90-98 RENAULT CLIO 1.1L
90-98 RENAULT R19 1.2LL

HONGYAN AUTO PARTS

RENAULT

RE-0038

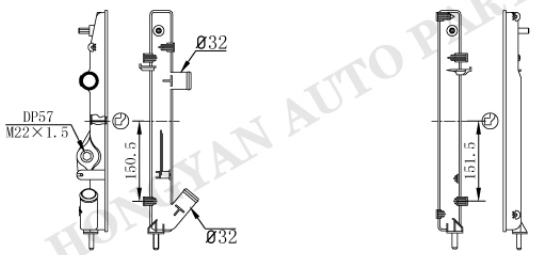

RE-0039

Tank size :(R11.5×4×5×42.5×415)
OEM :7700425842 7701352976
7711135327 8200189286
DPI :
NISSENS :63896A
APPLICATION :
96-03 RENAULT MEGANE 1.6L
99-03 RENAULT SCENIC 1.6L

RE-0040

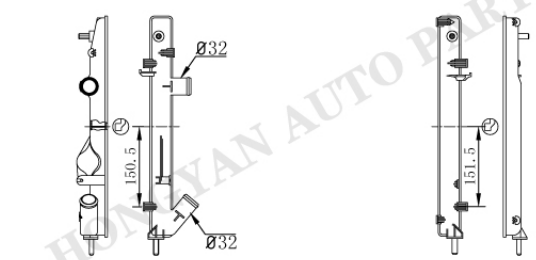

RE-0039

Tank size :(R11.5×4×5×42.5×415)
OEM :
DPI :
NISSENS :
APPLICATION :
96-03 RENAULT MEGANE 1.6L
99-03 RENAULT SCENIC 1.6L

RE-0041

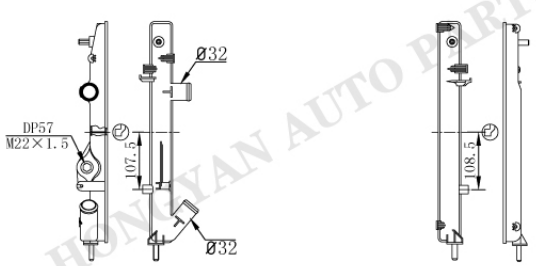

RE-0042

Tank size :(R11.5×4×5×42.5×415)
OEM :
DPI :
NISSENS :
APPLICATION :
96-03 RENAULT MEGANE 1.6L
99-03 RENAULT SCENIC 1.6L

RE-0043

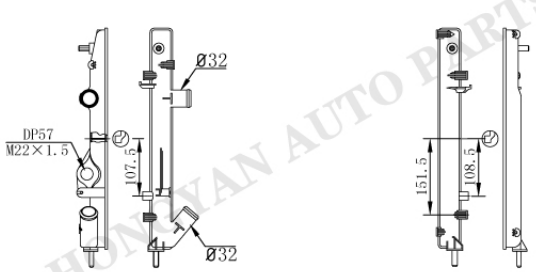

RE-0044

Tank size :(R11.5×4×5×42.5×415)
OEM :
DPI :
NISSENS :
APPLICATION :
96-03 RENAULT MEGANE 1.6L
99-03 RENAULT SCENIC 1.6L

HONGYAN AUTO PARTS

RE-0045

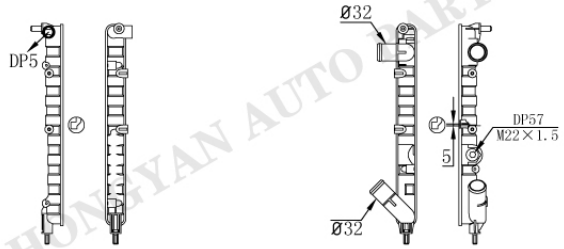

RE-0046

Tank size :(R13.5×5×5×38×378)
OEM :7700795175
DPI :
NISSENS :
APPLICATION :
89-96 RENAULT R21 2.0/2.2L
89-96 RENAULT ESPACE 2.0/2.2L

RE-0045

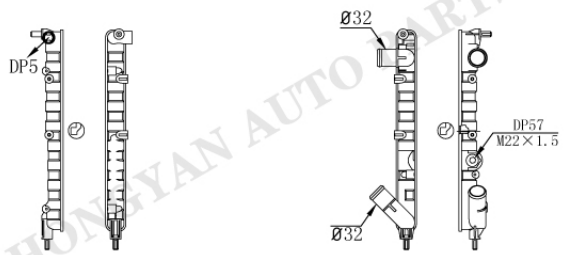

RE-0047

Tank size :(R13.5×5×5×38×378)
OEM :7700795175
DPI :
NISSENS :
APPLICATION :
89-96 RENAULT R21 2.0/2.2L
89-96 RENAULT ESPACE 2.0/2.2L

RE-0048

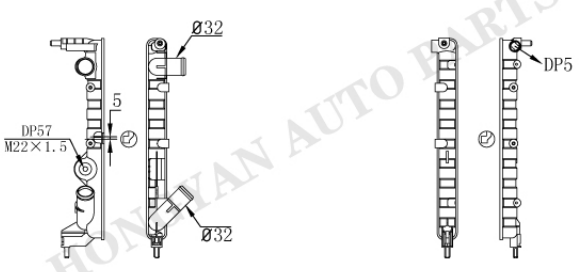

RE-0049

Tank size :(R13.5×5×5×38×378)
OEM :7701034768
DPI :
NISSENS :
APPLICATION :
88-96 RENAULT R19 1.2/1.4L
88-96 RENAULT CLIO 1.2/1.4L

RE-0050

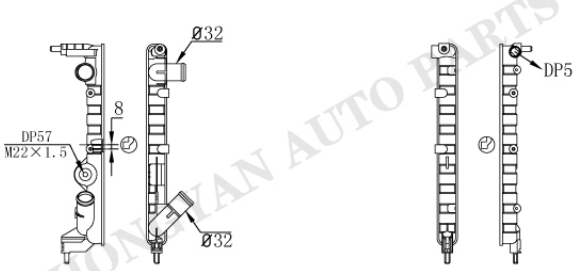

RE-0049

Tank size :(R13.5×5×5×38×378)
OEM :7701034768
DPI :
NISSENS :
APPLICATION :
88-96 RENAULT R19 1.2/1.4L
88-96 RENAULT CLIO 1.2/1.4L

HONGYAN AUTO PARTS

RENAULT

RE-0051

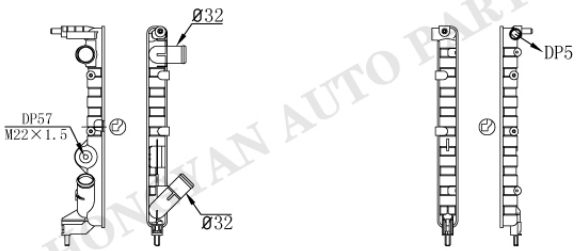

RE-0049

Tank size :(R13.5×5×5×38×378)
OEM :7701034768
DPI :
NISSENS :
APPLICATION :
88-96 RENAULT R19 1.2/1.4L
88-96 RENAULT CLIO 1.2/1.4L

RE-0052

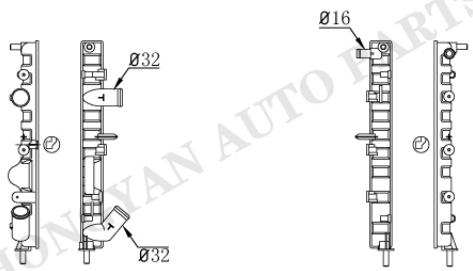

RE-0053

Tank size :(R5.5×5×5×41.5×389.5)
OEM :7700786444
DPI :
NISSENS :
APPLICATION :
88-96 RENAULT R19 1.2/1.4L
88-96 RENAULT CLIO 1.2/1.4L

RE-0052

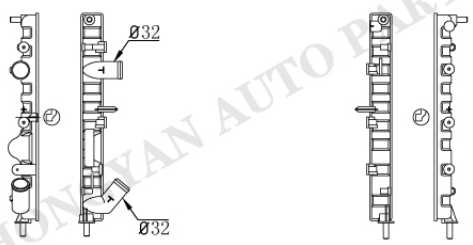

RE-0054

Tank size : (R5.5×5×5×41.5×389.5)
OEM :7700786444
DPI :
NISSENS :
APPLICATION :
88-96 RENAULT R19 1.2/1.4L
88-96 RENAULT CLIO 1.2/1.4L

RE-0055

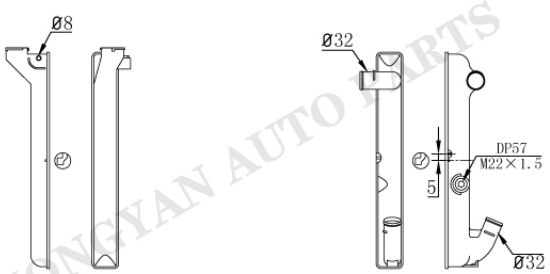

RE-0056

Tank size :(R8.5×5×5×50×407)
OEM :7700757930
DPI :
NISSENS :
APPLICATION :
85- RENAULT EXPRESS
85- RENAULT RAPID
85- RENAULT EXTRA

HONGYAN AUTO PARTS

RE-0057

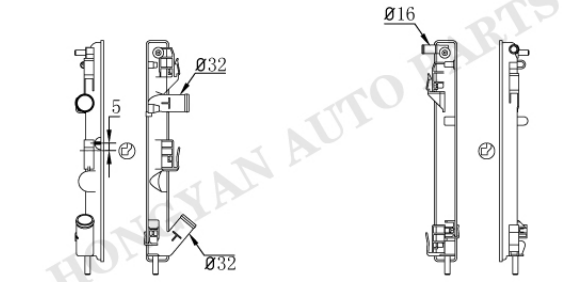

RE-0058

Tank size :(R11.5×4×5×42.5×415)
OEM :7700430784 7711134331
8200164413 2140000QAY
DPI :
NISSENS :638081
APPLICATION :
99-09 RENAULT CLIO 1.2L
00-02 RENAULT KANGOO 1.2L

RE-0059

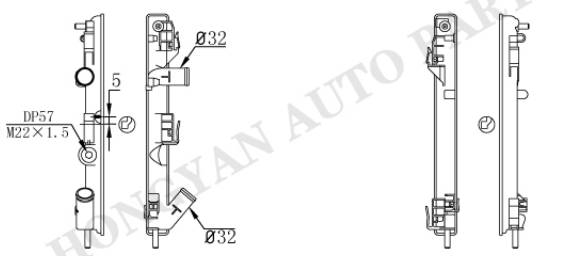

RE-0060

Tank size :(R11.5×4×5×42.5×415)
OEM :
DPI :
NISSENS :
APPLICATION :
99-09 RENAULT CLIO 1.2L
00-02 RENAULT KANGOO 1.2L

RE-0061

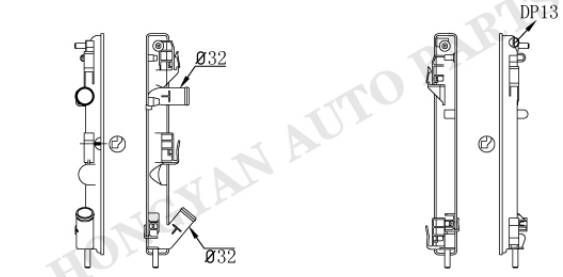

RE-0062

Tank size :(R11.5×4×5×42.5×415)
OEM :
DPI :
NISSENS :
APPLICATION :
99-09 RENAULT CLIO 1.2L
00-02 RENAULT KANGOO 1.2L

RE-0063

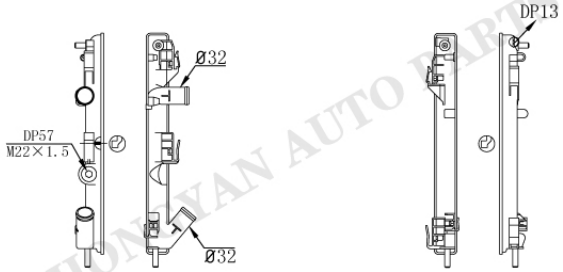

RE-0062

Tank size :(R11.5×4×5×42.5×415)
OEM :
DPI :
NISSENS :
APPLICATION :
99-09 RENAULT CLIO 1.2L
00-02 RENAULT KANGOO 1.2L

HONGYAN AUTO PARTS

RENAULT

RE-0064

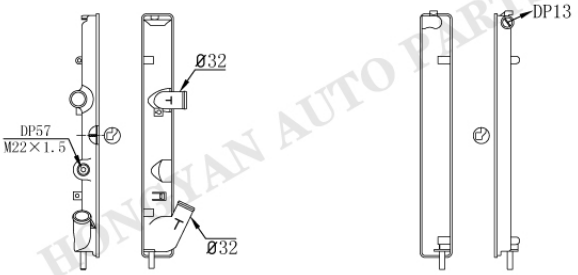

RE-0065

Tank size :(R10×4.5×5×60×458)
OEM :7700301171
DPI :
NISSENS :
APPLICATION :
97- RENAULT KANGOO

RE-0066

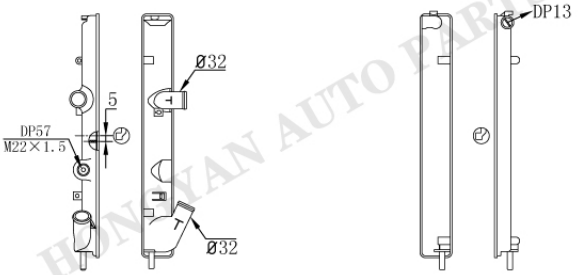

RE-0065

Tank size :(R10×4.5×5×60×458)
OEM :
DPI :
NISSENS :
APPLICATION :
97- RENAULT KANGOO

RE-0067

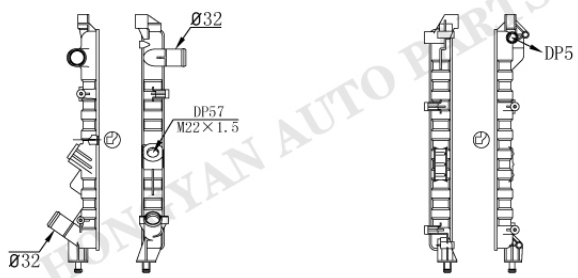

RE-0068

Tank size :(R11.5×4×5×42.5×415)
OEM :77010382377 7701499549
DPI :
NISSENS :63832
APPLICATION :
96-02 RENAULT ESPACE 1.8/2.0L
93-01 RENAULT LAGUNA 1.8/2.0L

RE-0069

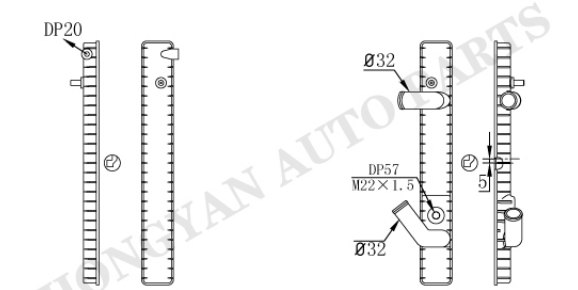

RE-0070

Tank size :(R10×4.5×5×60×458)
OEM :60060000712
DPI :
NISSENS :
APPLICATION :
91- RENAULT EXPRESS 1.9L
91- RENAULT EXTRA 1.9L
91- RENAULT RAPID 1.9L

HONGYAN AUTO PARTS

RENAULT

RE-0071

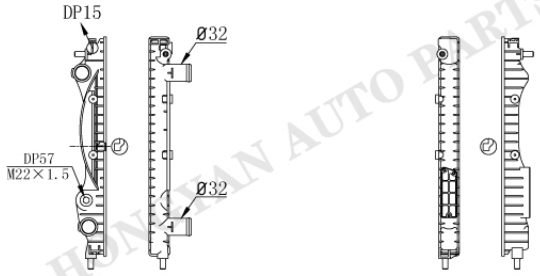

RE-0072

Tank size :(R5.5×5×5×38.5×411.5)
OEM :7700806575
DPI :
NISSENS :63968A
APPLICATION :
90-98 RENAULT CLIO 1.2/1.4L
91-98 RENAULT EXTRA 1.2/1.4L

RE-0073

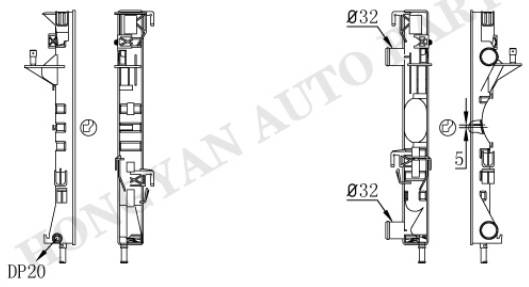

RE-0074

Tank size :(R6.5×5×5×48×440.5)
OEM :8200008765 8200302463
DPI :
NISSENS :63816
APPLICATION :
02-10 RENAULT ESPACE 1.9/2.0L
01-10 RENAULT LAGUNA 1.9/2.0L
02-10 RENAULT VEL SATIS 1.9/2.0L

RE-0075

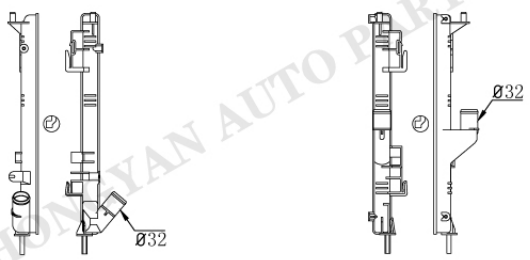

RE-0076

Tank size :(R8.5×4.5×5×35×415)
OEM :8200735039
DPI :
NISSENS :637612
APPLICATION :
12-15 RENAULT DUSTER 1.6/2.0L
08-12 RENAULT LOGAN 1.2/1.4/1.6L
07-15 RENAULT SANDERO 1.4/1.5L
12-15 LADA LARGUS 1.4L

RE-0077

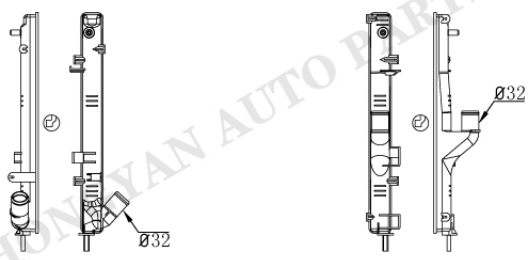

RE-0078

Tank size :(R11×4.5×5×42×415.5)
OEM :214100598R 8200582026
DPI :
NISSENS :637613
APPLICATION :
12-15 RENAULT DUSTER 1.6/2.0L
08-12 RENAULT LOGAN 1.2/1.4/1.6L
07-15 RENAULT TONDAR 1.4/1.5L
12-15 LADA LARGUS 1.4L

HONGYAN AUTO PARTS

RENAULT

RE-0079

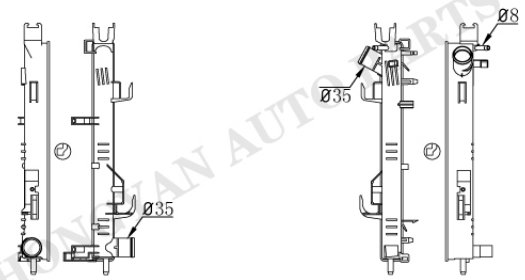

RE-0080

Tank size :(R8.5×4.5×4×42×412)
OEM :214100078R
DPI :
NISSENS :637624
APPLICATION :
13-15 RENAULT CAPTUR 1.5L
12-15 RENAULT CLIO 1.5L
13-15 RENAULT DUSTER 1.2/1.5L

RE-0081

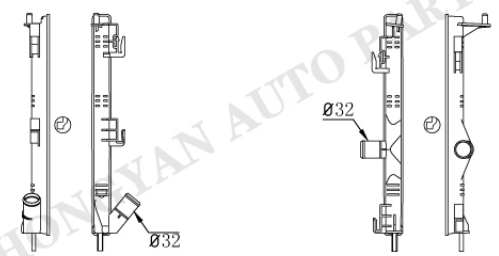

RE-0082

Tank size :(R8.5×4.5×5×35×415)
OEM :8200735038
DPI :
NISSENS :637609
APPLICATION :
08- RENAULT SANDERO 1.2L
04- DACIA LOGANI 1.2/1.4/1.6L
12- LADA LARGUS 1.2/1.4/1.6L
08- NISSAN NP200 1.6L

RE-0083

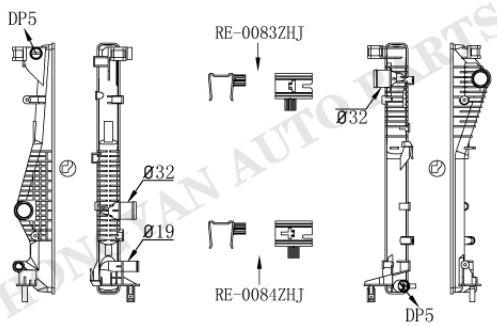

RE-0084

Tank size : (R11.5×4×5×42.5×470.8)
OEM :
DPI :
NISSENS :63124
APPLICATION :
06-11 RENAULT TRAFIC
06-11 OPEL VIVARO

RE-0085

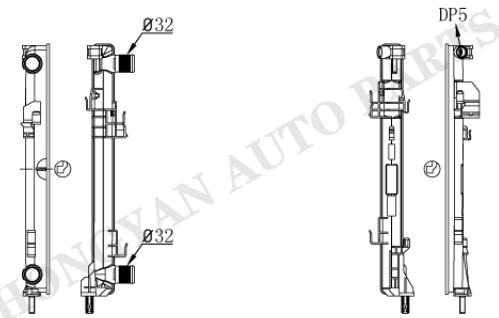

RE-0086

Tank size :(R11×4×5×42×470)
OEM : 2140000QAN/AS 91166000/A
4408645 4414161 7700312899
DPI :
NISSENS :63025A
APPLICATION :
01-06 RENAULT TRAFIC 1.9/2.0L
01-11 OPEL VIVARO 1.9/2.0L
01-08 NISSAN PRIMASTAR 1.9/2.0L
01-04 VAUXHALL VIVARO 1.9/2.0L

HONGYAN AUTO PARTS

RE-0087

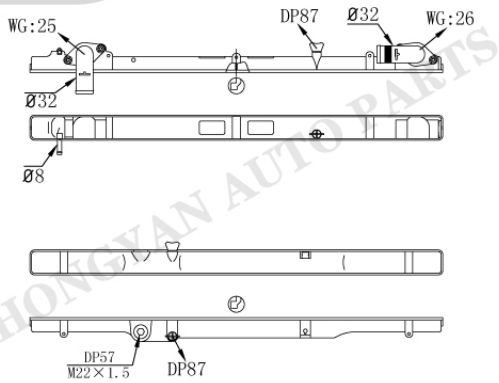

RE-0088

Tank size :(R9×4×5×47×775)
OEM :
DPI :
NISSENS :63797
APPLICATION :

RE-0089

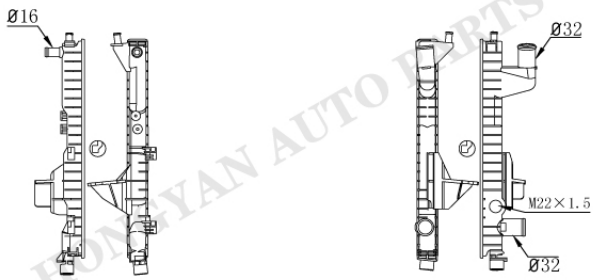

RE-0090

Tank size :(R5×4.5×5×38.5×411)
OEM :7701042415 7701352572
DPI :
NISSENS :63835A
APPLICATION :
93-96 RENAULT TWINGO 1.2L

RE-0089

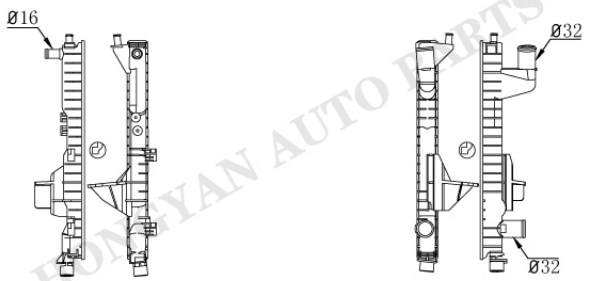

RE-0091

Tank size :(R5×4.5×5×38.5×411)
OEM :
DPI :
NISSENS :
APPLICATION :
93-96 RENAULT TWINGO 1.2L

RE-0092



RE-0093

Tank size :(R11×4×5×43×470.5)
OEM : 8200072712/3
DPI :
NISSENS :63763
APPLICATION :
03-08 RENAULT KANGOO 1.5L

HONGYAN AUTO PARTS

RENAULT

RE-0094

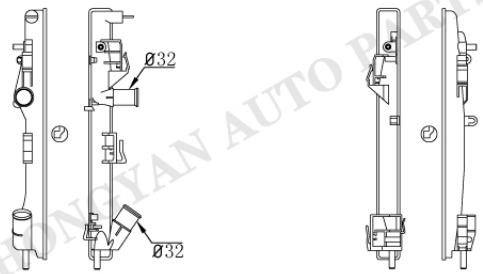

RE-0095

Tank size :(R11×4×5×43×470.5)
OEM :
DPI :
NISSENS :
APPLICATION :
03-08 RENAULT KANGOO

RE-0096

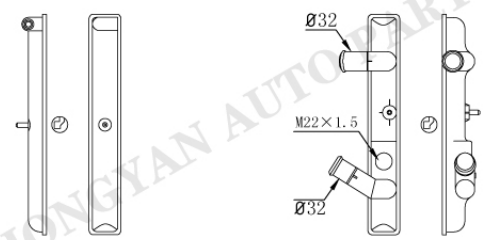

RE-0097

Tank size :(R9×4.5×4.8×60×414)
OEM :
DPI :
NISSENS :63946
APPLICATION :
91-98 RENAULT CLIO 1.9L

RE-0098

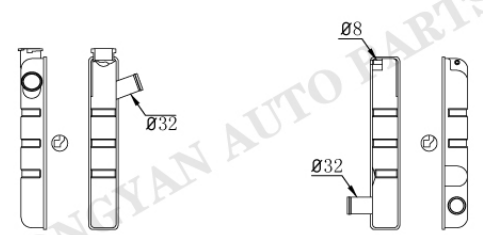

RE-0099

Tank size : (R8×4.6×4.8×54.8×324)
OEM :
DPI :
NISSENS :63830
APPLICATION :
69-81 RENAULT R12

RE-0098

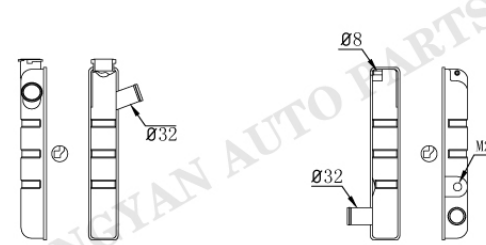

RE-0100

Tank size : (R8×4.6×4.8×54.8×324)
OEM :
DPI :
NISSENS :
APPLICATION :
69-81 RENAULT R12

HONGYAN AUTO PARTS

RENAULT

RE-0101

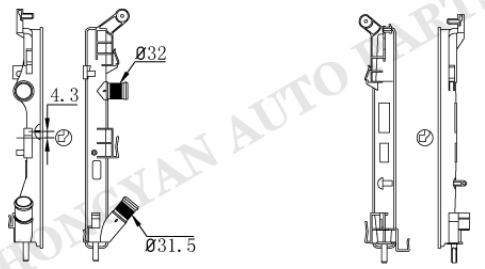

RE-0102

Tank size :(R8.5×5×5×42.5×415)
OEM :7700436916 7701474240
DPI :
NISSENS :67246
APPLICATION :
01-08 RENAULT CLIO 1.5/1.6L
01-10 RENAULT KANGOO 1.5/1.6L

RE-0103

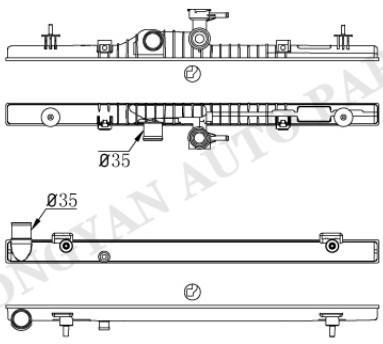

RE-0104

Tank size :(R5.5×4×5.5×42.3×701)
OEM :
DPI :
NISSENS :
APPLICATION :
08- RENAULT KOLEOS 2.0L

RE-0105

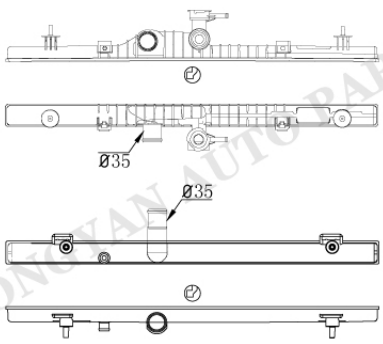

RE-0106

Tank size :(R5.5×4×5.5×42.3×701)
OEM :
DPI :
NISSENS :
APPLICATION :
08- RENAULT KOLEOS 2.5L

RE-0107

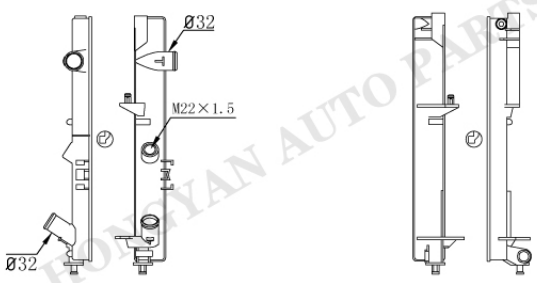

RE-0108

Tank size :(R7×4×5×59.5×458.5)
OEM : 6025310088 6025411680
7701038219 7701043411/4076
DPI :
NISSENS :63851A
APPLICATION :
94-01 RENAULT LAGUNA 1.8/2.0/2.2L
01-03 RENAULT AVANTIME 1.8/2.0/2.2L
96-02 RENAULT ESPACE 1.8/2.0/2.2L

HONGYAN AUTO PARTS

RENAULT

RE-0109

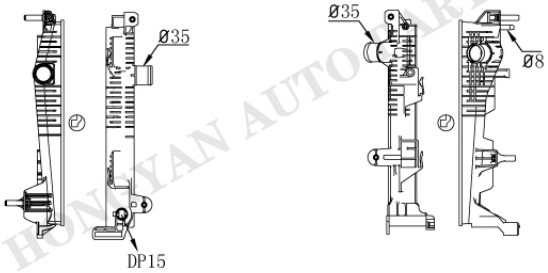

RE-0110

Tank size :(R4.5×4×5×42.5×386.5)
OEM :214100002R
DPI :
NISSENS :637608
APPLICATION :
09-15 RENAULT SCENIC 1.4/1.5/1.6L

RE-0111

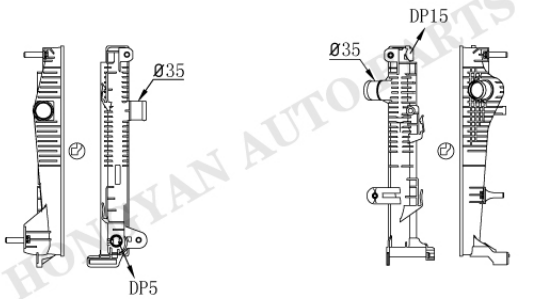

RE-0112

Tank size :(R4.5×4×5×42.5×396.5)
OEM :214100057R
DPI :
NISSENS :637617
APPLICATION :
08-15 RENAULT MEGANE

RE-0111

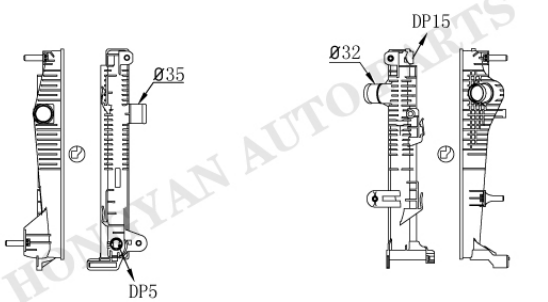

RE-0113

Tank size :(R4.5×4×5×42.5×396.5)
OEM :214100016R
DPI :
NISSENS :637607
APPLICATION :
10-15 RENAULT FLUENCE
08-15 RENAULT MEGANE

RE-0114

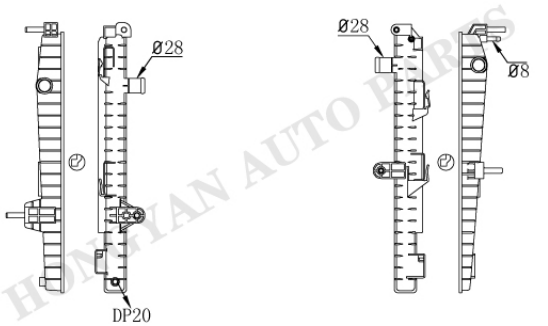

RE-0115

Tank size :(R6.5×5×5×42×490.5)
OEM :214100014R 214100067R
DPI :
NISSENS :637606
APPLICATION :
10-15 RENAULT FLUENCE
08-14 RENAULT GRAN TOUT
09-14 RENAULT GRAND SCENIC
08-15 RENAULT MEGANE

HONGYAN AUTO PARTS

RE-0116

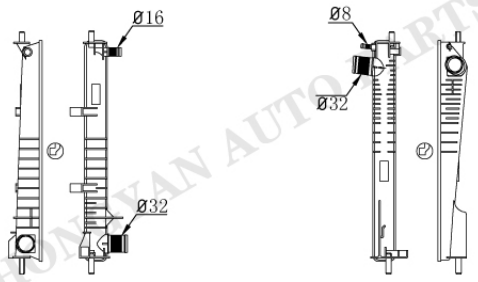

RE-0117

Tank size :(R11×4×5×42×414.5)
OEM :8200468913 8200468931
DPI :
NISSENS :67283
APPLICATION :
05-15 RENAULT CLIO
04-15 RENAULT MODUS

RE-0116

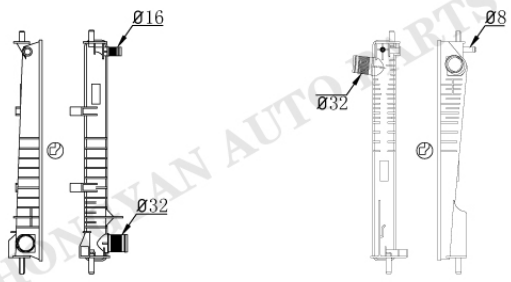

RE-0118

Tank size :(R11×4×5×42×414.5)
OEM :8200489879
DPI :
NISSENS :67284
APPLICATION :
05-13 RENAULT CLIO

RE-0119

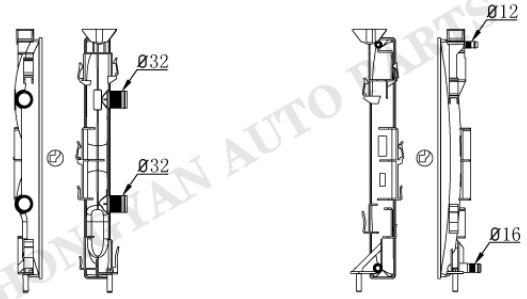

RE-0120

Tank size :(R6.5×4×5.5×49.5×451.5)
OEM :7711135784 8200115542
8200117609 8200357536
DPI :
NISSENS :63765A
APPLICATION :
04-11 RENAULT GRAND SCENIC
02-13 RENAULT MEGANE
03-12 RENAULT SCENIC

RE-0121

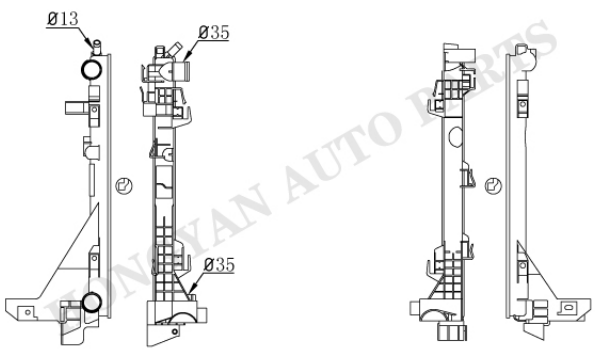

RE-0122

Tank size :(R5.5×4×5.5×42×493.5)
OEM :
DPI :
NISSENS :630732
APPLICATION :
10- RENAULT MASTER

RENAULT

RE-0123

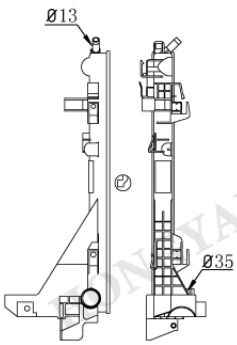

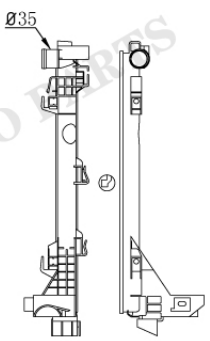

RE-0124

Tank size :(R5.5×4×5.5×42×493.5)
OEM :
DPI :
NISSENS :630733
APPLICATION :
10- RENAULT MASTER

RE-0125

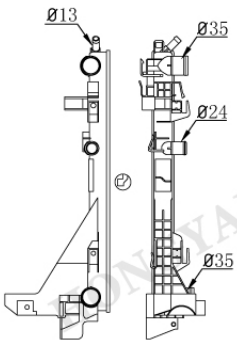

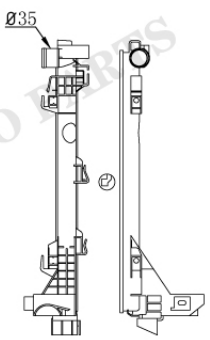

RE-0124

Tank size :(R5.5×4×5.5×42×493.5)
OEM :
DPI :
NISSENS :
APPLICATION :
10- RENAULT MASTER

RE-0126

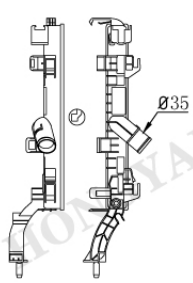

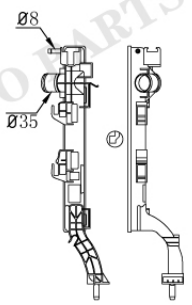

RE-0127

Tank size :(R5.5×4×5.5×42×355)
OEM :
DPI :
NISSENS :637604
APPLICATION :
07- RENAULT LAGUNA
11- RENAULT LATITUDE

RE-0128

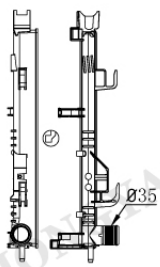

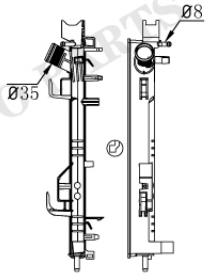

RE-0129

Tank size :(R7.5×4×4×31.5×411.5)
OEM :
DPI :
NISSENS :
APPLICATION :
13- RENAULT SYMBOL

HONGYAN AUTO PARTS

RE-0130

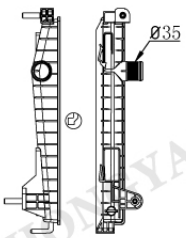

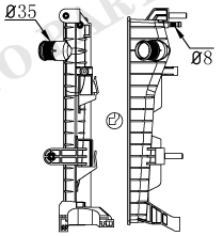

RE-0131

Tank size :(R7×5×5×46.5×389.5)
OEM :
DPI :
NISSENS :
APPLICATION :
08- RENAULT FLUENCE 1.5L D

RE-0132

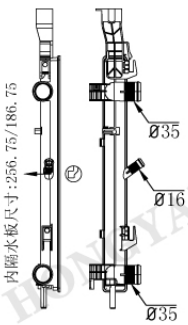

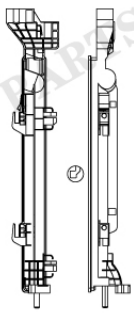

RE-0133

Tank size :(R7.5×5×4.5×47×443.5)
OEM :
DPI :
NISSENS :
APPLICATION :
08- RENAULT KANGOO 11 1.5L

RE-0134

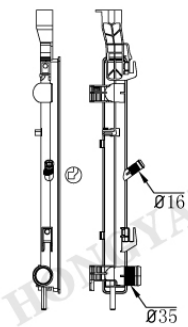

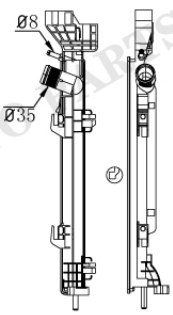

RE-0135

Tank size :(R7.5×5×4.5×47×443.5)
OEM :
DPI :
NISSENS :
APPLICATION :
08- RENAULT KANGOO 11 1.5L

RE-0136

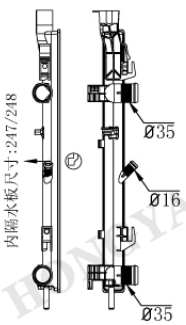

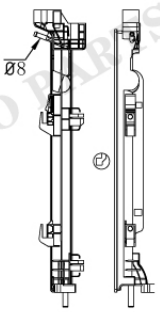

RE-0137

Tank size :(R5×4×5×42×495)
OEM :
DPI :
NISSENS :
APPLICATION :
08- RENAULT KANGOO 1.6L

HONGYAN AUTO PARTS

RENAULT

RE-0138

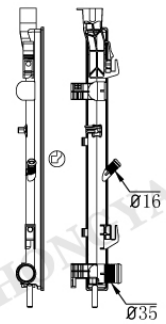

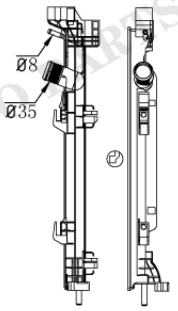

RE-0139

Tank size :(R5×4×5×42×495)
OEM :
DPI :
NISSENS :
APPLICATION :
08- RENAULT KANGOO 1.6L

RE-0140

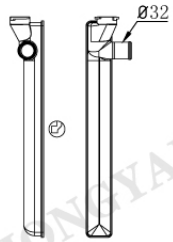

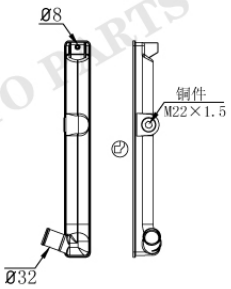

RE-0141

Tank size :(R9.5×4.5×4.5×50×407)
OEM :
DPI :
NISSENS :
APPLICATION :
RENAULT

RE-0142

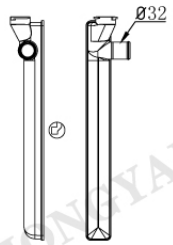

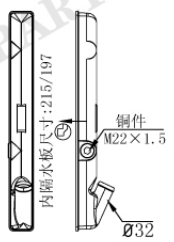

RE-0143

Tank size :(R8×4.5×4.5×48×413)
OEM :
DPI :
NISSENS :
APPLICATION :
RENAULT

RE-0144

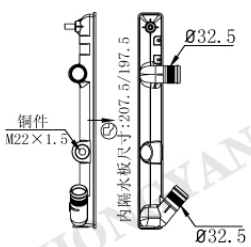

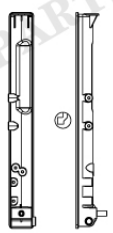

RE-0145

Tank size :(R7×4×4.5×48×405)
OEM :
DPI :
NISSENS :
APPLICATION :
88- RENAULT R19

HONGYAN AUTO PARTS

RENAULT

RE-0146

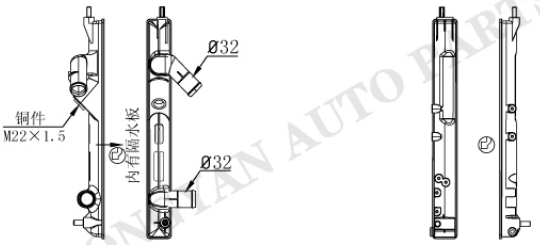

RE-0147

Tank size :(R7×4×4.5×48×413)
OEM :
DPI :
NISSENS :
APPLICATION :
RENAULT

RE-0148

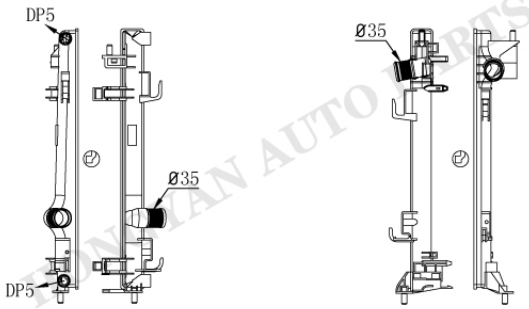

RE-0149

Tank size :(R5×4×5×42.5×489)
OEM :214101809R
DPI :
NISSENS :637664
APPLICATION :
15- RENAULT KADJAR 1.6T DCI

RE-0150

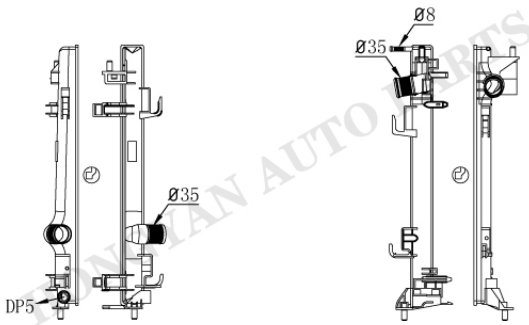

RE-0151

Tank size :(R5×4×5×42.5×489)
OEM :
DPI :
NISSENS :
APPLICATION :
15- RENAULT KADJAR 1.6T DCI

RE-0152

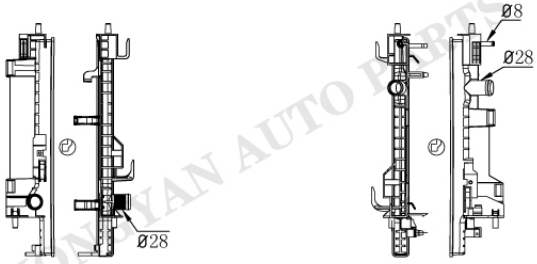

RE-0153

Tank size :(R×4.5×5×31.5×411.5)
OEM :214105514R
DPI :
NISSENS :637662
APPLICATION :
14- RENAULT TWINGO

HONGYAN AUTO PARTS

RENAULT

RE-0154

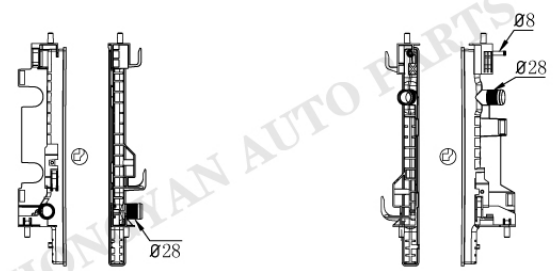

RE-0155

Tank size :(R×4.5×5×31.5×411.5)
OEM :214101206R
DPI :
NISSENS :637659
APPLICATION :
14- RENAULT TWINGO

RE-0156

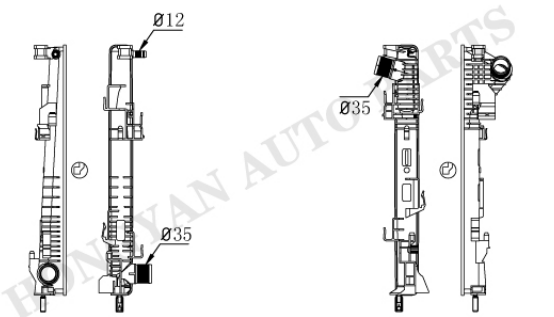

RE-0157

Tank size :(R11.5×4×5×42.5×470.8)
OEM :8200411166 2140000Q0C
DPI :
NISSENS :63122
APPLICATION :
01- RENAULT TRAFIC 2.0L
01- OPEL VIVARO 2.0L
02- NISSAN PRIMASTAR 2.0L

RE-0158

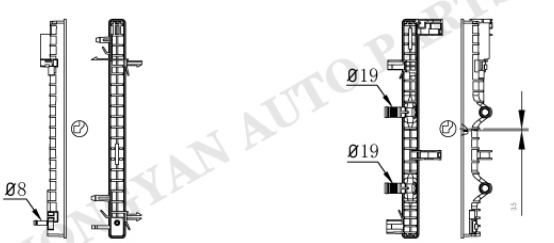

RE-0159

Tank size : (R7×4.5×4×31.5×412)
OEM :144610515R
DPI :
NISSENS :
APPLICATION :
14- RENAULT TWINGO

RE-0026

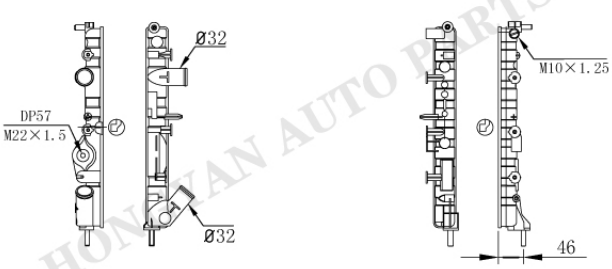

RE-0160

Tank size :(R8×5×5×42.5×378)
OEM :7700838135 7701352604
DPI :
NISSENS :639391
APPLICATION :
95-96 RENAULT MEGANE 1.6/1.9/2.0L

HONGYAN AUTO PARTS

RE-0161

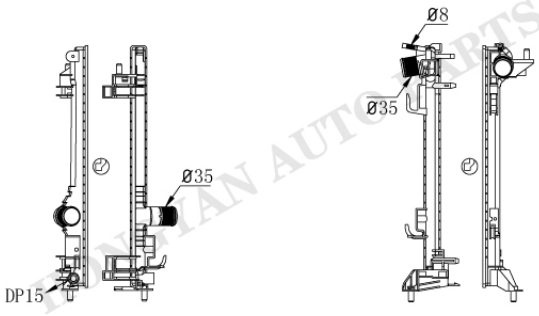

RE-0162

Tank size :(R7×3.5×5×31×455)
OEM :214109798R
DPI :
NISSENS :606472
APPLICATION :
15- RENAULT MEGANE

RE-0163

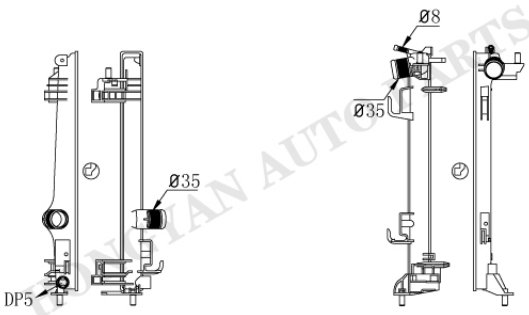

RE-0164

Tank size :(R4.5×4×5×43×450)
OEM :214108607R
DPI :
NISSENS :606472
APPLICATION :
15- RENAULT MEGANE

RE-0165

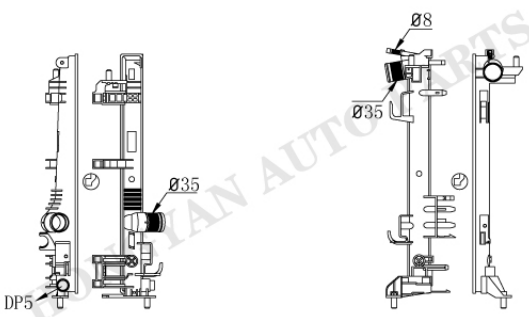

RE-0166

Tank size :(R4.5×4×5×43×450)
OEM :214105196R
DPI :
NISSENS :606473
APPLICATION :
15- RENAULT MEGANE

Tank size :
OEM :
DPI :
NISSENS :
APPLICATION :

HONGYAN AUTO PARTS

	Tank size : OEM : DPI : NISSENS : APPLICATION :
	Tank size : OEM : DPI : NISSENS : APPLICATION :
	Tank size : OEM : DPI : NISSENS : APPLICATION :
	Tank size : OEM : DPI : NISSENS : APPLICATION :

HONGYAN AUTO PARTS

	Tank size : OEM : DPI : NISSENS : APPLICATION :
	Tank size : OEM : DPI : NISSENS : APPLICATION :
	Tank size : OEM : DPI : NISSENS : APPLICATION :
	Tank size : OEM : DPI : NISSENS : APPLICATION :

HONGYAN AUTO PARTS

LAND ROVER

RO-0001

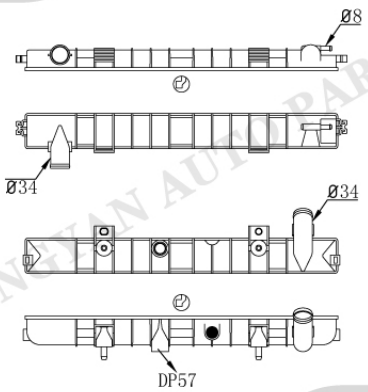

Tank size :(R6.5×5×5×66×587.5)
OEM :ERS2269 ESR2269 PCC106940
DPI :
NISSENS :64302A
APPLICATION :
93-02 LAND ROVER RANGE ROVER 3.9/4.2L

RO-0002

RO-0003

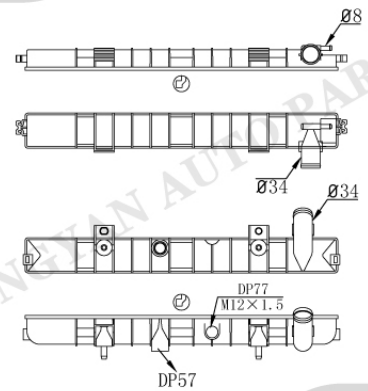

Tank size :(R6.5×5×5×66×587.5)
OEM :
DPI :
NISSENS :
APPLICATION :
93-02 LAND ROVER RANGE ROVER 3.9/4.2L

RO-0004

RO-0005

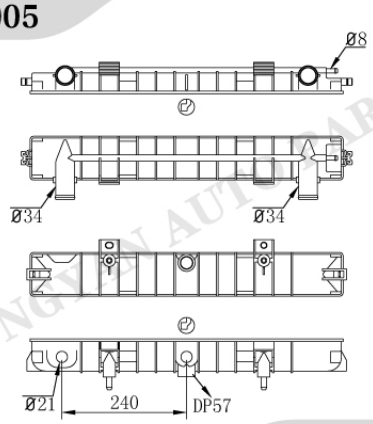

Tank size :(R6.5×5×5×82×587.5)
OEM :
DPI :
NISSENS :64309
APPLICATION :
93-02 LAND ROVER RANGE ROVER 2.5L(DIESEL)

RO-0006AT/MT

RO-0007

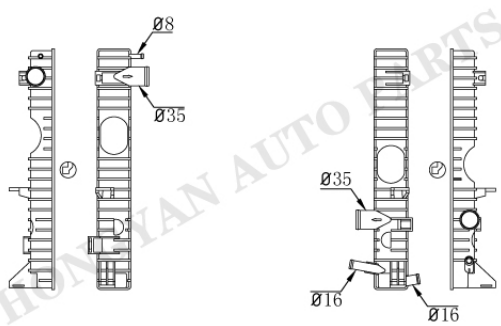

Tank size :(R6.5×5×5×63.5×452)
OEM :PCC001020
DPI :
NISSENS :64311A
APPLICATION :
98-15 LAND ROVER DEFENDER 2.5L(DIESEL)

RO-0008

HONGYAN AUTO PARTS

LAND ROVER

RO-0009

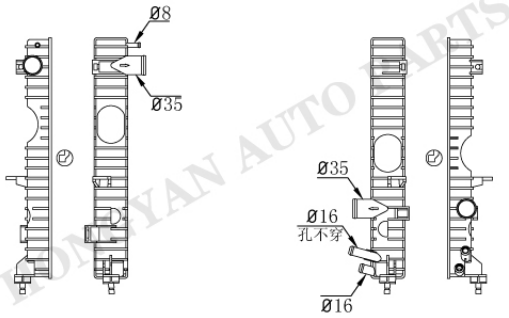

RO-0010

Tank size :(R6.5×5×5×63.5×452)
OEM :PCC001070 PDK000080
DPI :
NISSENS :64312A
APPLICATION :
98-04 LAND ROVER DISCOVERY 2.5L(DIESEL)

RO-0011

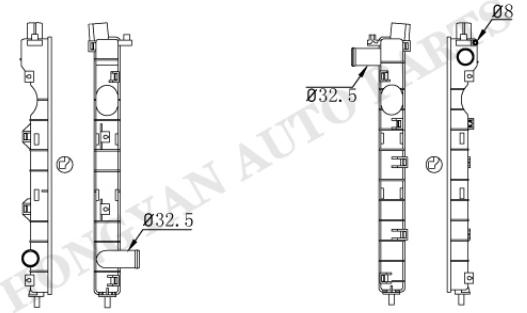

RO-0012

Tank size :(R8.5×5×6×49×479)
OEM :PCC000320 PCC000321
DPI :2870
NISSENS :64310A
APPLICATION :
98-06 LAND ROVER FREELANDER 2.5L

RO-0013AT/MT

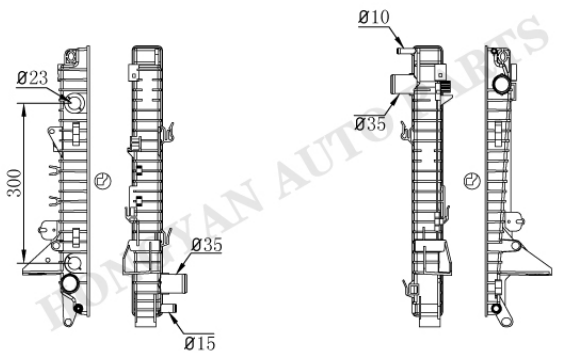

RO-0014

Tank size : (R8.5×4.7×4×58.5×507.5)
OEM : PCC500111/112/201/330/530
DPI :
NISSENS :64321A
APPLICATION :
04-14 LAND ROVER DISCOVERY 2.7L(DIESEL)

RO-0015

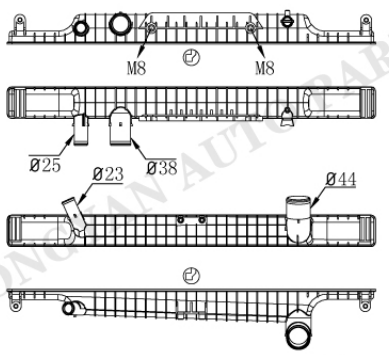

RO-0016

Tank size :(R9×4.7×4×58.5×692)
OEM :
DPI :
NISSENS :643222
APPLICATION :
06-12 LAND ROVER RANGE ROVER 3.6L(DIESEL)

HONGYAN AUTO PARTS

LAND ROVER

RO-0017



RO-0018

Tank size :(50.2×452)
OEM : ESR4197 PCC000110 PCC000111
DPI :
NISSENS :64301A
APPLICATION :
98-06 LAND ROVER FREELANDER 1.8L

RO-0019



RO-0018

Tank size :(50.2×452)
OEM : ESR4199 PCC000100 PCC000101
DPI :
NISSENS :64300A
APPLICATION :
98-06 LAND ROVER FREELANDER 2.0L(DIESEL)

RO-0020

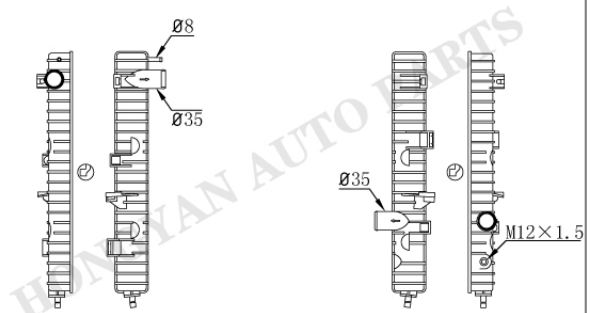

RO-0021

Tank size : (R8.5×5.6×5×63.4×453)
OEM :PCC000710
DPI :2930
NISSENS :64313A
APPLICATION :
00-04 LAND ROVER DISCOVERY 4.0L

RO-0022

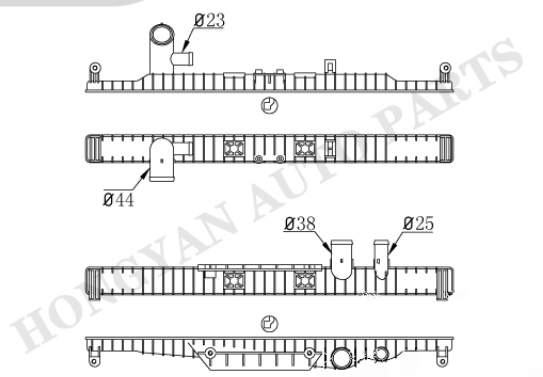

RO-0023

Tank size :(R8.5X5X4X52X690)
OEM :LR015561
DPI :
NISSENS :64332
APPLICATION :
09-15 LAND ROVER DISCOVERY 3.0L(DIESEL)
12-15 LAND ROVER LR4 3.0L(DIESEL)

HONGYAN AUTO PARTS

LAND ROVER

RO-0024AT/MT

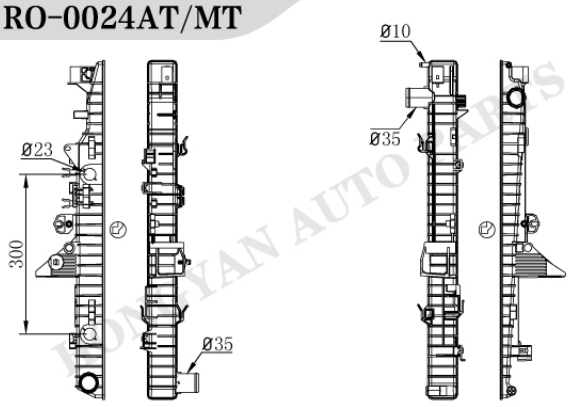

RO-0025

Tank size :(R8.5×5×4×58.5×637)
OEM :PCC500040/1 PCC500093
DPI :
NISSENS :64320A
APPLICATION :
04-09 LAND ROVER LR3 4.0/4.4L
06-09 LAND ROVER RANGE ROVER SPORT 4.2/4.4L

RO-0026

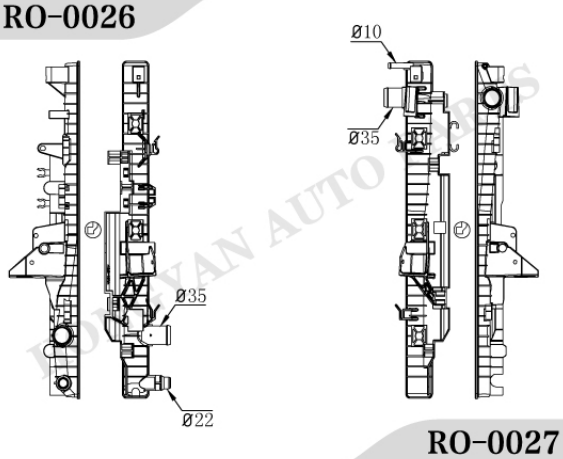

RO-0027

Tank size :(R×5×4×52×633.5)
OEM :
DPI :
NISSENS :
APPLICATION :
LAND ROVER

RO-0028

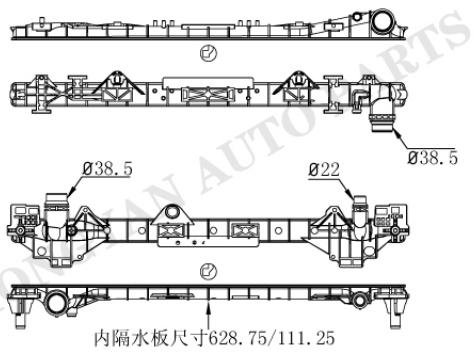

RO-0029

Tank size :(R9×5×4×43.5×740)
OEM :
DPI :
NISSENS :
APPLICATION :
LAND ROVER

RO-0030

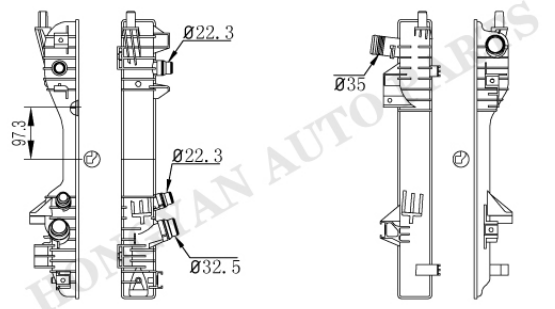

RO-0031

Tank size :(R6.5×5×5×63.5×524)
OEM :
DPI :
NISSENS :
APPLICATION :

LAND ROVER

RO-0032

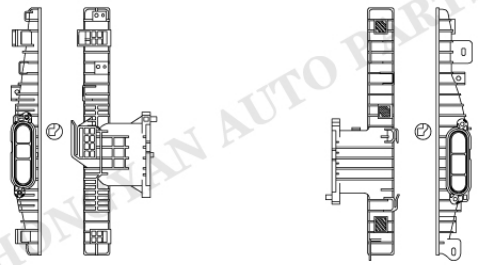

RO-0033

Tank size :(R4.5×4×5.1×49.2×464.6)
OEM :
DPI :
NISSENS :
APPLICATION :

RO-0034

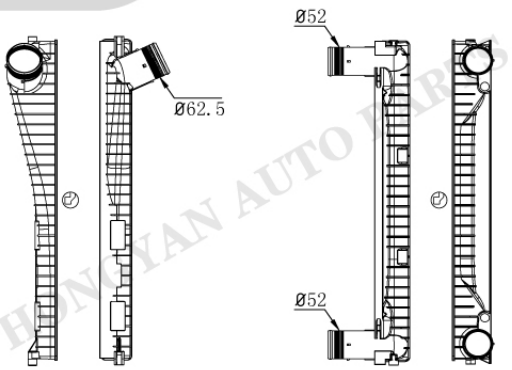

RO-0035

Tank size :(R9×5×4×56.5×602.5)
OEM :
DPI :
NISSENS :
APPLICATION :
10-13 LAND ROVER RANGE ROVER SPORT 3.0L

Tank size :
OEM :
DPI :
NISSENS :
APPLICATION :

Tank size :
OEM :
DPI :
NISSENS :
APPLICATION :

HONGYAN AUTO PARTS

	Tank size : OEM : DPI : NISSENS : APPLICATION :
	Tank size : OEM : DPI : NISSENS : APPLICATION :
	Tank size : OEM : DPI : NISSENS : APPLICATION :
	Tank size : OEM : DPI : NISSENS : APPLICATION :

HONGYAN AUTO PARTS

	Tank size : OEM : DPI : NISSENS : APPLICATION :
	Tank size : OEM : DPI : NISSENS : APPLICATION :
	Tank size : OEM : DPI : NISSENS : APPLICATION :
	Tank size : OEM : DPI : NISSENS : APPLICATION :

HONGYAN AUTO PARTS

RW-0001

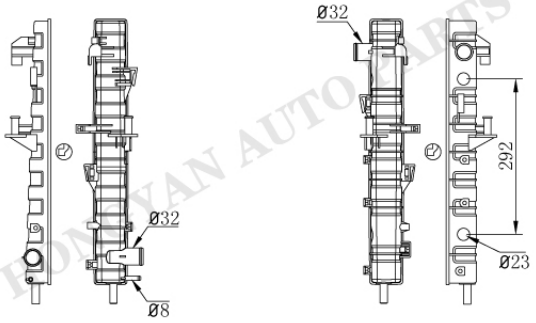

RW-0002AT/MT

Tank size :(R5.5×4×5×62×499)
OEM :
DPI :
NISSENS :
APPLICATION :
ROEWE 550

RW-0003

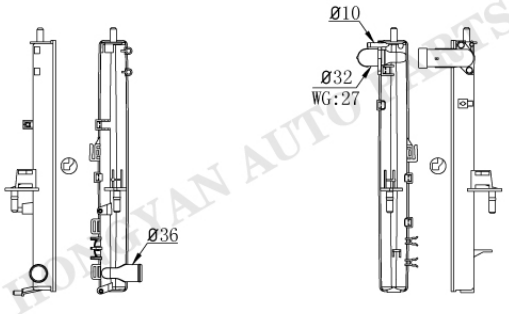

RW-0004

Tank size :(R9×4.5×4.5×53×472)
OEM :
DPI :
NISSENS :
APPLICATION :
ROEWE 750

RW-0005

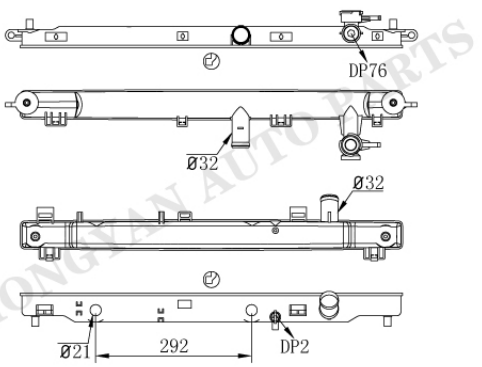

RW-0006AT/MT

Tank size :(R8.5×4.5×4.5×53×718)
OEM :
DPI :
NISSENS :
APPLICATION :
ROEWE 350

RW-0007

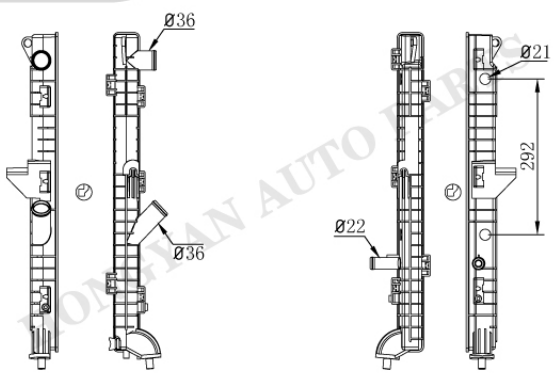

RW-0008AT/MT

Tank size :(R8×4.7×5×51.5×600)
OEM :
DPI :
NISSENS :
APPLICATION :
ROEWE W5 3.2L

HONGYAN AUTO PARTS

ROEWE

RW-0009

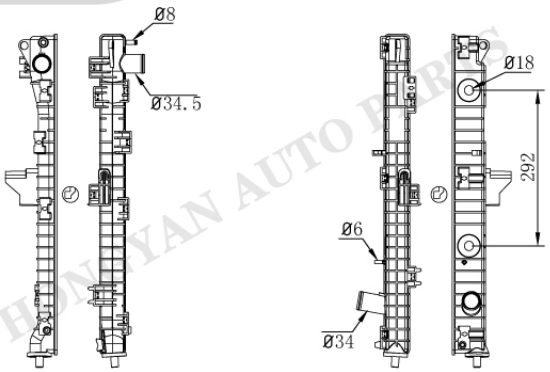

RW-0010AT/MT

Tank size :(R10×4.8×5×50×603)
OEM :
DPI :
NISSENS :
APPLICATION :
ROEWE W5 1.8L

RW-0011

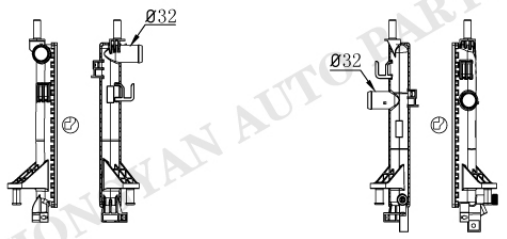

RW-0012

Tank size :(R5.5×4×5.5×41.5×310)
OEM :
DPI :
NISSENS :
APPLICATION :
15- ROEWE 550

RW-0013

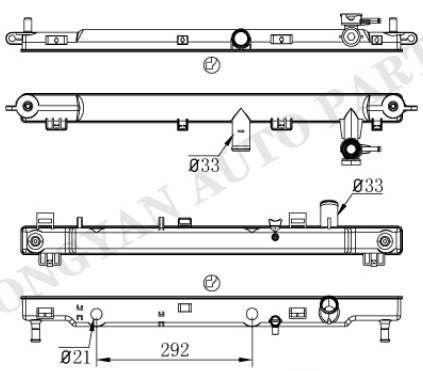

RW-0014AT/MT

Tank size :(R9×4.5×4.5×53×718)
OEM :
DPI :
NISSENS :
APPLICATION :
ROEWE 360

Tank size :
OEM :
DPI :
NISSENS :
APPLICATION :

HONGYAN AUTO PARTS

SA-0001

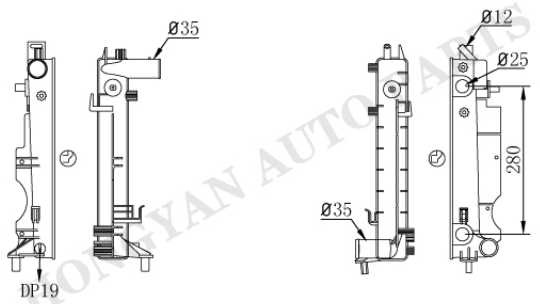

Tank size :(R10×5×4.5×59×377.5)
OEM :4283438 4357794 4357927
4729554/62/70/88/96
DPI :2080
NISSENS :64034A 64036A
APPLICATION :
99-03 SAAB 9-3 2.0L
91-98 SAAB 900 2.1/2.3L

SA-0002AT/MT

Tank size :
OEM :
DPI :
NISSENS :
APPLICATION :

Tank size :
OEM :
DPI :
NISSENS :
APPLICATION :

Tank size :
OEM :
DPI :
NISSENS :
APPLICATION :

HONGYAN AUTO PARTS

SSANGYONG

SS-0001

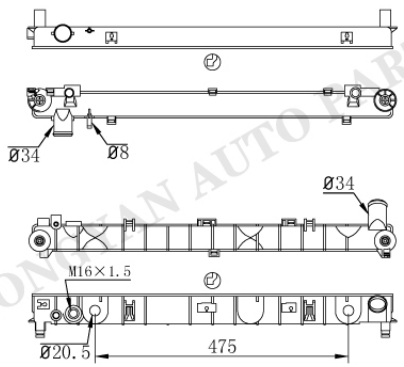

SS-0002AT/MT

Tank size : (R9.5×4.5×4.7×51×676.5)
OEM :2131008223 2131408120
DPI :
NISSENS :64318 61642
APPLICATION :
02- SSANGYONG REXTON 2.9L(DIESEL)

SS-0003

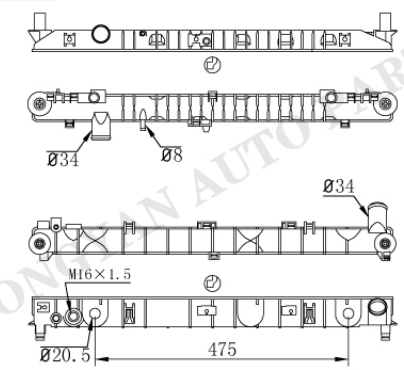

SS-0002AT/MT

Tank size : (R9.5×4.5×4.7×51×676.5)
OEM :2131008223 2131408120
DPI :
NISSENS :64318 61642
APPLICATION :
02- SSANGYONG REXTON 2.9L(DIESEL)

SS-0004

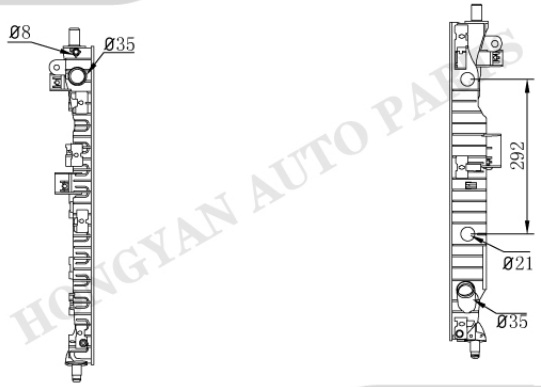

SS-0005AT/MT

Tank size : (R9×4.5×5×50.5×597.5)
OEM :
DPI :
NISSENS :
APPLICATION :
SSANGYONG

SS-0004

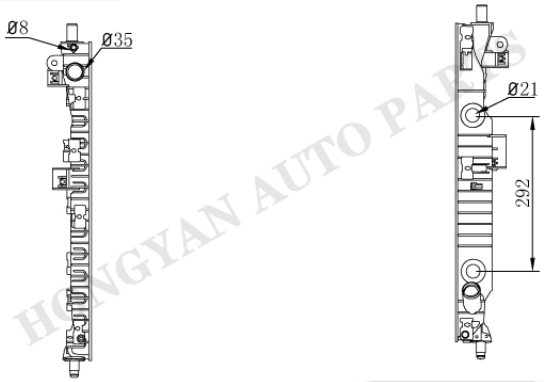

SS-0006AT/MT

Tank size : (R9×4.5×5×50.5×597.5)
OEM :
DPI :
NISSENS :
APPLICATION :
SSANGYONG

HONGYAN AUTO PARTS

SS-1

SSANGYONG

SS-0007

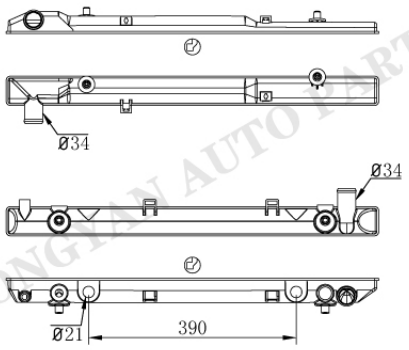

SS-0008AT/MT

Tank size :(R8×5×4×55×700)
OEM :
DPI :
NISSENS :
APPLICATION :
SSANGYONG

SS-0009

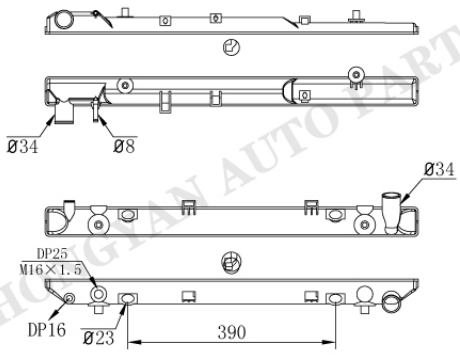

SS-0010AT/MT

Tank size :(R8×5×4×55×700)
OEM :
DPI :
NISSENS :
APPLICATION :
SSANGYONG KORANDO

SS-0011

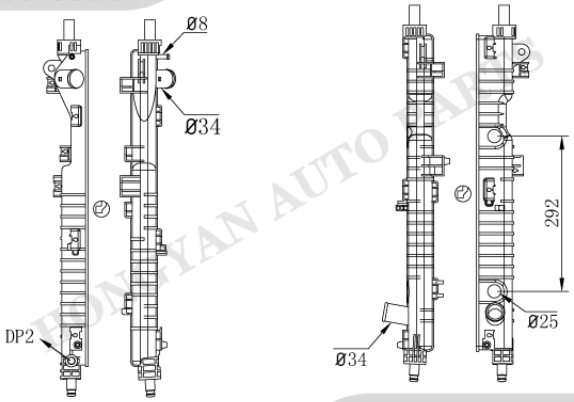

SS-0012AT/MT

Tank size :(R10×4.5×5×50.5×596.5)
OEM :2131032121
DPI :
NISSENS :
APPLICATION :
06-11 SSANGYONG ACTYON SPORT 2.0L(DIESEL)

SS-0013

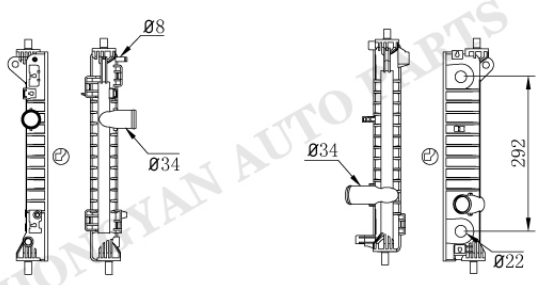

SS-0014AT/MT

Tank size :(R10.5×4.5×5×51×393)
OEM :
DPI :
NISSENS :
APPLICATION :
13- SSANGYONG KORANDO

HONGYAN AUTO PARTS

SSANGYONG

SS-0015

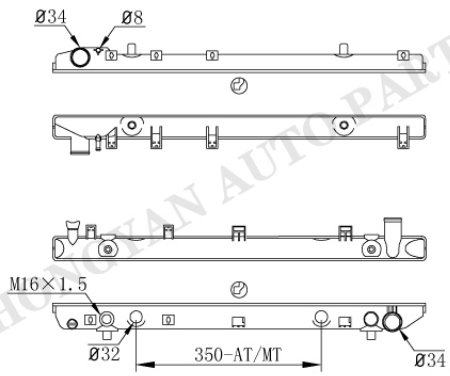

Tank size : (R8×5×5×47×699.5)
OEM :
DPI :
NISSENS :
APPLICATION :
93- SSANGYONG MUSSO

SS-0016AT/MT

Tank size :
OEM :
DPI :
NISSENS :
APPLICATION :

Tank size :
OEM :
DPI :
NISSENS :
APPLICATION :

Tank size :
OEM :
DPI :
NISSENS :
APPLICATION :

HONGYAN AUTO PARTS

	Tank size : OEM : DPI : NISSENS : APPLICATION :
	Tank size : OEM : DPI : NISSENS : APPLICATION :
	Tank size : OEM : DPI : NISSENS : APPLICATION :
	Tank size : OEM : DPI : NISSENS : APPLICATION :

HONGYAN AUTO PARTS

SUBARU

SU-0001

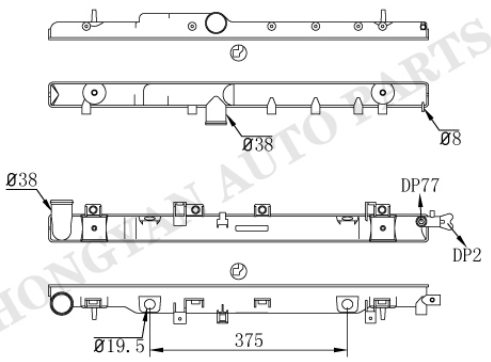

SU-0002AT/MT

Tank size :(R8.5×5×4×47/57×713)
OEM :45111FE000 45111FE020
DPI :2450
NISSENS :64116
APPLICATION :
02-03 SUBARU IMPREZA 2.0L

SU-0003

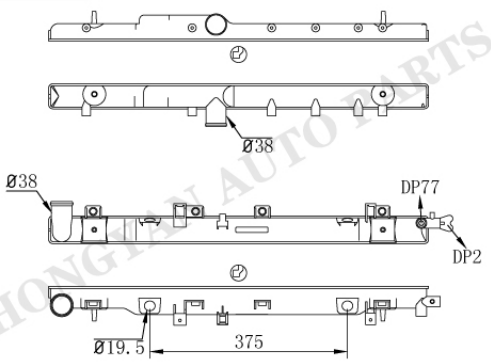

SU-0002AT/MT

Tank size :(R8.5×5×4×47/57×713)
OEM :
DPI :
NISSENS :
APPLICATION :
02-03 SUBARU IMPREZA 2.0L

SU-0004

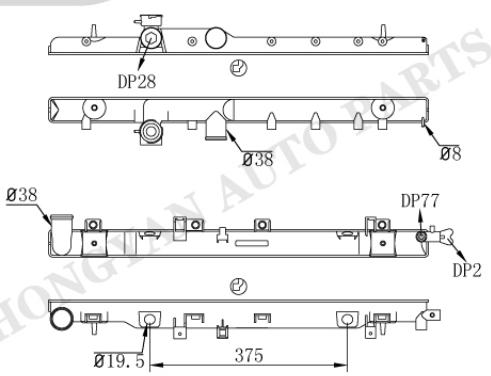

SU-0002AT/MT

Tank size :(R8.5×5×4×47/57×713)
OEM :45111FE050/080/101/111
45119FE000/010/020/030/050
DPI :2703 2704
NISSENS :67708
APPLICATION :
03-07 SUBARU IMPREZA 2.0/2.5L
04-06 SUBARU BAJA 2.5L
05-06 SAAB 9-2X 2.0/2.5L

SU-0005

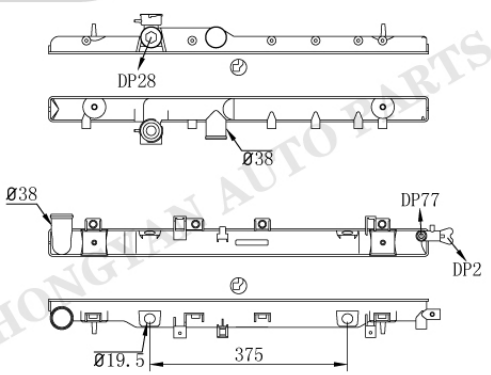

SU-0002AT/MT

Tank size :(R8.5×5×4×47/57×713)
OEM :45111FE000/050/080
45119FE030
DPI :2464
NISSENS :67711
APPLICATION :
02-07 SUBARU IMPREZA 1.6/2.0/2.5L

HONGTAN AUTO PARTS

SU-0006

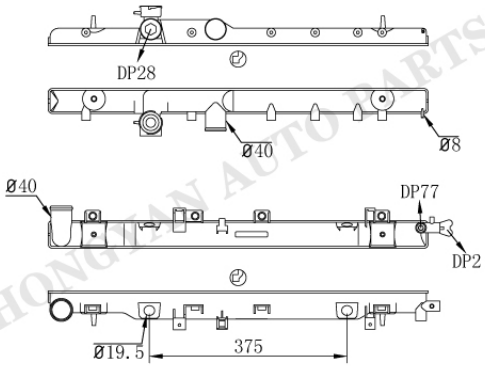

SU-0007AT/MT

Tank size :(R8.5×5×4×47/57×713)
OEM :
DPI :
NISSENS :
APPLICATION :
03-07 SUBARU IMPREZA 2.0/2.5L
04-06 SUBARU BAJA 2.5L
05-06 SAAB 9-2X 2.0/2.5L

SU-0008

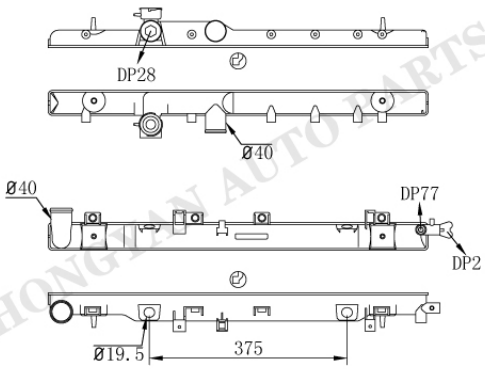

SU-0007AT/MT

Tank size :(R8.5×5×4×47/57×713)
OEM :
DPI :
NISSENS :
APPLICATION :
02-07 SUBARU IMPREZA 2.5L

SU-0009

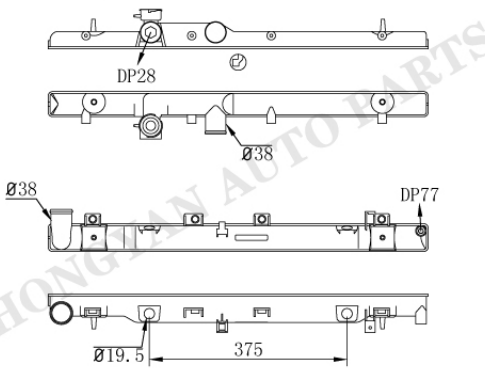

SU-0010AT/MT

Tank size :(R8.5×5×4.5×36/57×713)
OEM :45111AE00A 45111AE01A
DPI :2331
NISSENS :
APPLICATION :
03-06 SUBARU BAJA 2.5L
00-04 SUBARU LEGACY 2.5L
00-04 SUBARU OUTBACK 2.5L

SU-0009

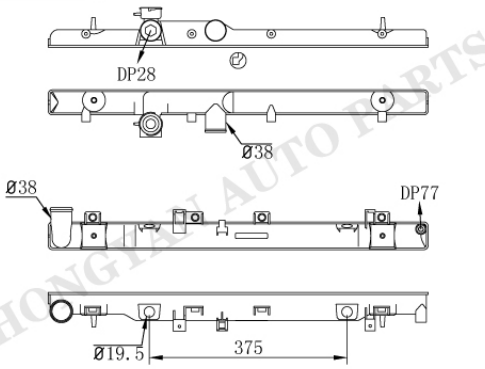

SU-0011AT/MT

Tank size :(R8.5×5×4.5×36/57×713)
OEM :
DPI :
NISSENS :
APPLICATION :
03-06 SUBARU BAJA 2.5L
00-04 SUBARU LEGACY 2.5L
00-04 SUBARU OUTBACK 2.5L

SUBARU

SU-0012

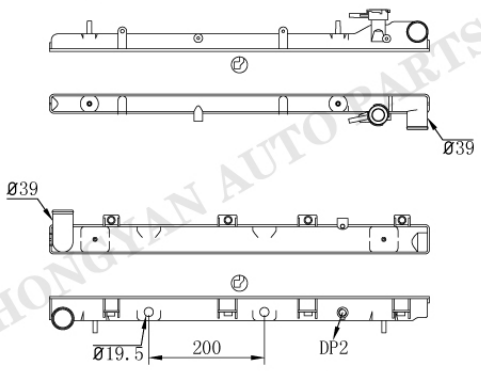

SU-0013AT/MT

Tank size :(R8.5×5×4.5×36/57×713)
OEM :45199FA030/40 45199FC021
45199FC031 45199FC340
DPI :1574
NISSENS :
APPLICATION :
93-98 SUBARU IMPREZA 1.8/2.2L

SU-0014

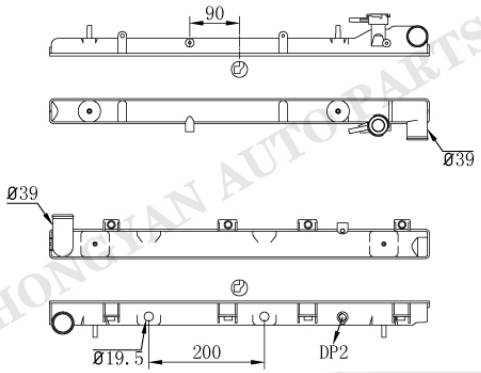

SU-0013AT/MT

Tank size :(R8.5×5×4.5×47/57×713)
OEM :
DPI :
NISSENS :
APPLICATION :
93-98 SUBARU IMPREZA 1.8/2.2L

SU-0015

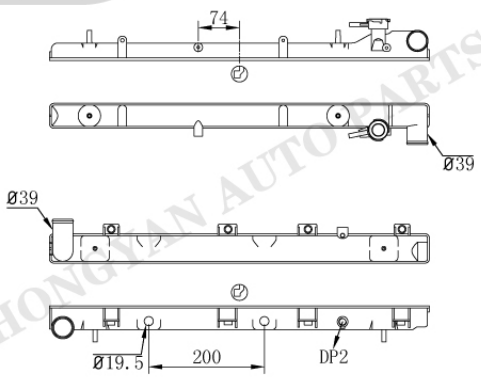

SU-0013AT/MT

Tank size :(R8.5×5×4.5×47/57×713)
OEM :
DPI :
NISSENS :
APPLICATION :
93-98 SUBARU IMPREZA 1.8/2.2L

SU-0016

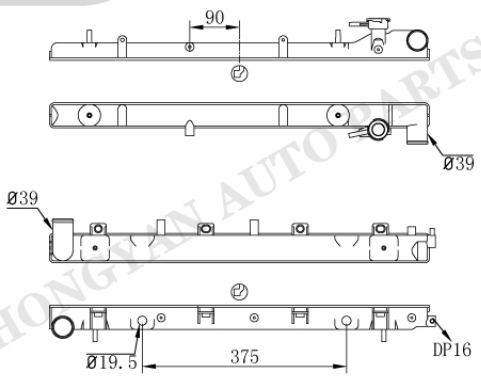

SU-0017AT/MT

Tank size :(R8.5×5×4.5×47/57×713)
OEM :45111FC340/50/60/70
45199FC340/50/61
DPI :2402 2674 2211
NISSENS :67728
APPLICATION :
99-08 SUBARU FORESTER 2.5L
99-01 SUBARU IMPREZA 2.2L

HONGYAN AUTO PARTS

SUBARU

SU-0018

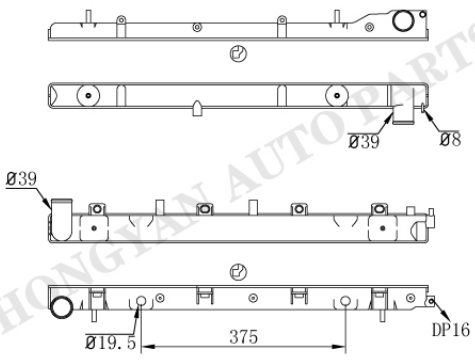

Tank size : (R8.5×5×4.5×47/57×713)
OEM : 45111SA090/000/010
DPI : 2812
NISSENS : 67707A
APPLICATION :
04-05 SUBARU FORESTER 2.5L

SU-0017AT/MT

SU-0019AT/MT

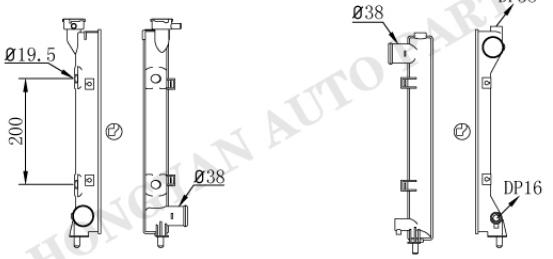

Tank size : (R9×5×5×46×383)
OEM : 45199AC040/041/070/071/100
45199AC110/270/280
DPI : 1853
NISSENS :
APPLICATION :
95-99 SUBARU LEGACY 2.2/2.5L

SU-0020

SU-0021AT/MT

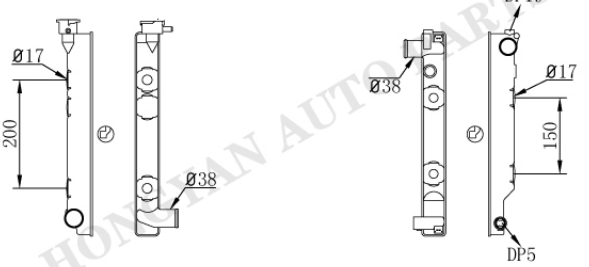

Tank size : (R9×5×5×46×383)
OEM : 45111AA181 45111AA190F
45199AA080/100/101/110/120
DPI : 1183 2152
NISSENS :
APPLICATION :
90-94 SUBARU LEGACY 2.2L

SU-0022AT/MT

SU-0023AT

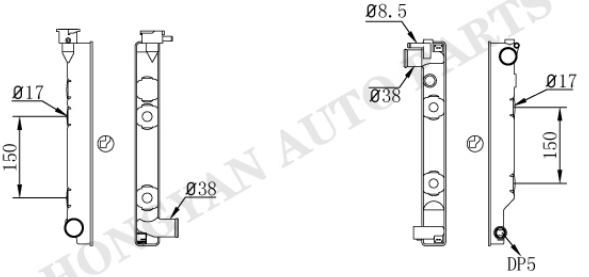

Tank size : (R9×5×5×46×383)
OEM :
DPI :
NISSENS :
APPLICATION :
90-94 SUBARU LEGACY 2.2L

SU-0024AT/MT

HONGYAN AUTO PARTS

SUBARU

SU-0025AT/MT

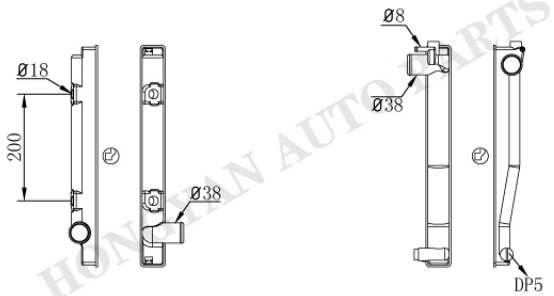

Tank size : (R7.5×4.8×3.5×47×415.5)
OEM :45111AA181 45111AA240/60
45111AC230
DPI :1819
NISSENS :641111 64099
APPLICATION :
91-94 SUBARU LEGACY 2.2L

SU-0026

SU-0027AT/MT

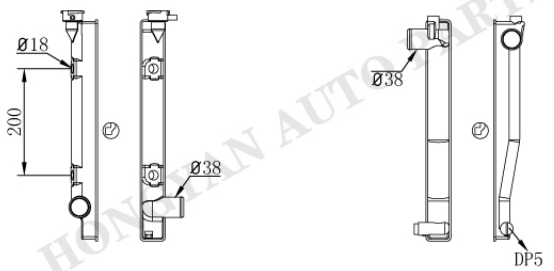

Tank size : (R7.5×4.8×3.5×47×415.5)
OEM :45199AC250
DPI :
NISSENS :67702
APPLICATION :
94- SUBARU LEGACY 2.5L

SU-0028

SU-0029

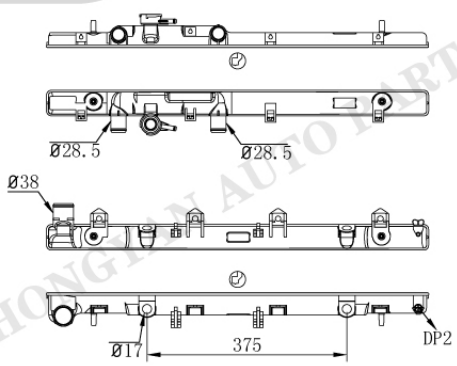

Tank size :(R9×4×5×48×717)
OEM :45111AE06A
DPI :2465
NISSENS :
APPLICATION :
01-04 SUBARU OUTBACK 3.0L

SU-0030AT/MT

SU-0031

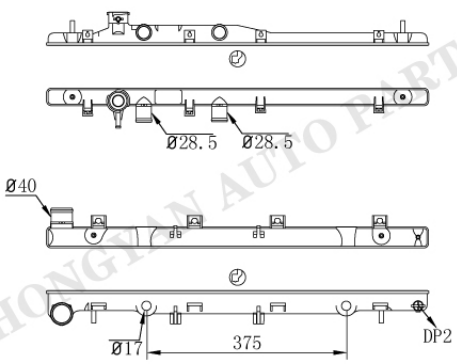

Tank size :(R9×4×5×33/40×717)
OEM :45111AG04A
DPI :2779
NISSENS :
APPLICATION :
05-08 SUBARU OUTBACK 3.0L
08-09 SUBARU LEGACY 3.0L

SU-0032AT/MT

HONGYAN AUTO PARTS

SU-0033

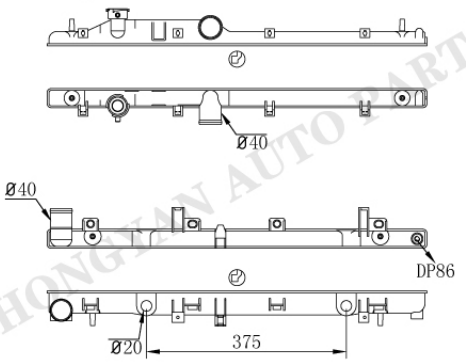

SU-0034AT/MT

Tank size :(R8×5×4×36×713)
OEM :45111AG00A/01A/07A
45119AG00A 45119SC000
DPI :2777 13092
NISSENS :67723
APPLICATION :
09-13 SUBARU FORESTER 2.5L
08-15 SUBARU IMPREZA 2.0/2.5L
06-09 SUBARU LEGACY 2.5L

SU-0035

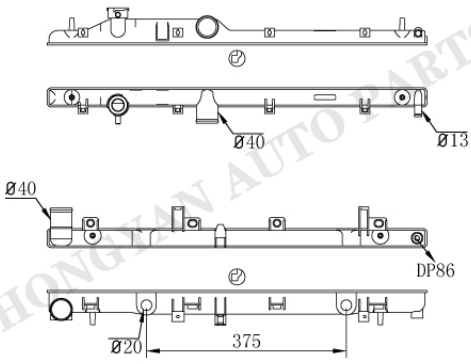

SU-0034AT/MT

Tank size :(R8×5×4×36×713)
OEM : 45111AG02A/03A 45119SC020
DPI :2778 13091
NISSENS :
APPLICATION :
05-09 SUBARU LAGACY 2.5L
05-09 SUBARU OUTBACK 2.5L
08-14 SUBARU IMPREZA 2.5L
13-14 SUBARU WRX 2.5L

SU-0036

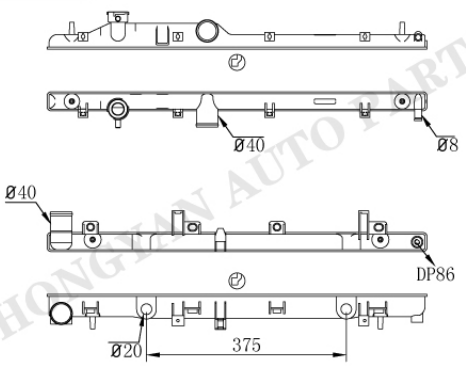

SU-0034AT/MT

Tank size :(R8×5×4×36×713)
OEM :45119FG030
DPI :13093
NISSENS :67717
APPLICATION :
08-14 SUBARU IMPREZA WRX 2.5L

SU-0037

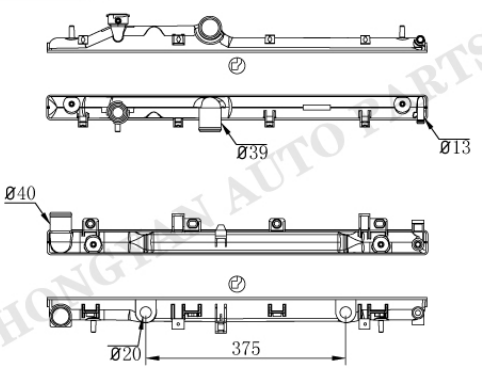

SU-0038AT/MT

Tank size :(R8.5×5×4×47×713)
OEM :45119SC020
DPI :13095
NISSENS :67716 67736
APPLICATION :
09-13 SUBARU FORESTER 2.5L

SUBARU

SU-0039

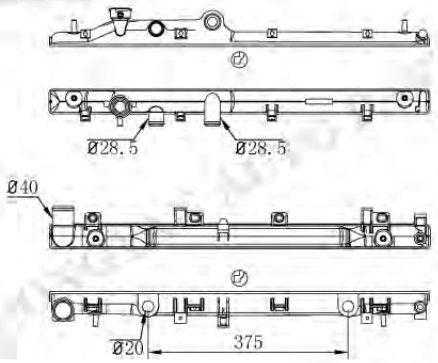

SU-0038AT/MT

Tank size :(R8.5×5×4×47×713)
OEM :45119AJ070
DPI :
NISSENS :67721
APPLICATION :
09-15 SUBARU LEGACY 2.0L
09-14 SUBARU LIBERTY 2.0L
09-15 SUBARU OUTBACK 2.0L

SU-0040AT/MT

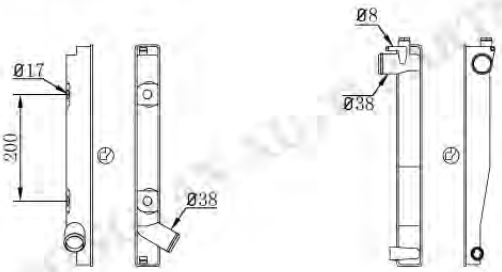

SU-0041

Tank size : (R7.5×4.8×3.5×47×415.5)
OEM :
DPI :
NISSENS :
APPLICATION :
91-94 SUBARU LEGACY 2.2L

SU-0042AT/MT

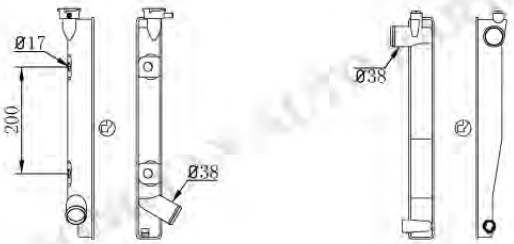

SU-0043

Tank size : (R7.5×4.8×3.5×47×415.5)
OEM :
DPI :
NISSENS :
APPLICATION :
94- SUBARU LEGACY 2.5L

SU-0044AT/MT



SU-0045

Tank size :(R7×5×5×50/40×348)
OEM : 45111GA570/580/631/637/641
45111GA650/660/680/710
DPI :935
NISSENS :
APPLICATION :
85-89 SUBARU DL 1.8L
85-89 SUBARU GL 1.8L
86-89 SUBARU RX 1.8L

SU-0046

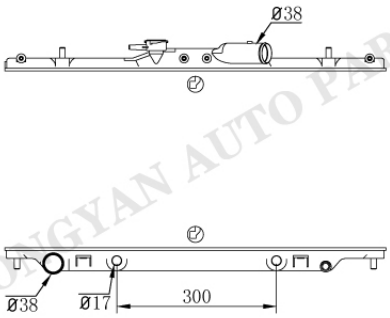

SU-0047AT/MT

Tank size :(R8.5×5.6×5×46.5/54×716)
OEM :
DPI :2083
NISSENS :
APPLICATION :
92-97 SUBARU SVX

SU-0048AT/MT



SU-0049

Tank size :(R8.5×4.5×5×48.5×506)
OEM :
DPI :2846
NISSENS :
APPLICATION :
06-07 SUBARU B9 3.0L
08-14 SUBARU TRIBECA 3.6L

SU-0050

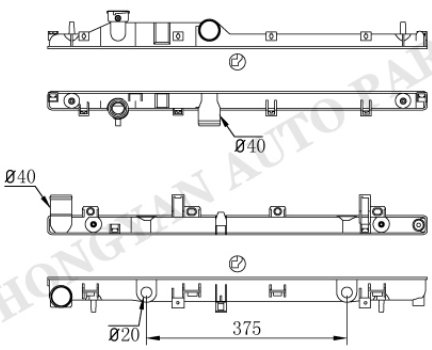

SU-0051AT/MT

Tank size :(R8×5×4×36×713)
OEM :
DPI :
NISSENS :
APPLICATION :
14- SUBARU FORESTER

SU-0052

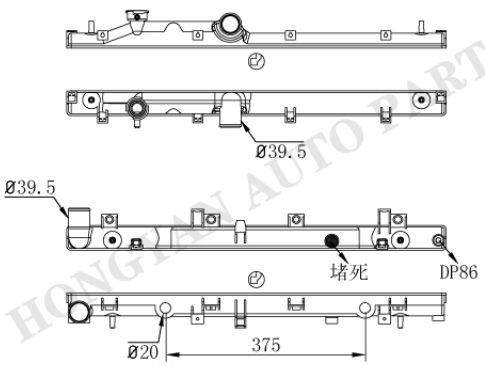

SU-0053AT/MT

Tank size :(R8.5×5×4×46.8×713)
OEM :45111SG010
DPI :13424 13425
NISSENS :
APPLICATION :
14-15 SUBARU FORESTER 2.0/2.5L

HONGYAN AUTO PARTS

SUBARU

SU-0054

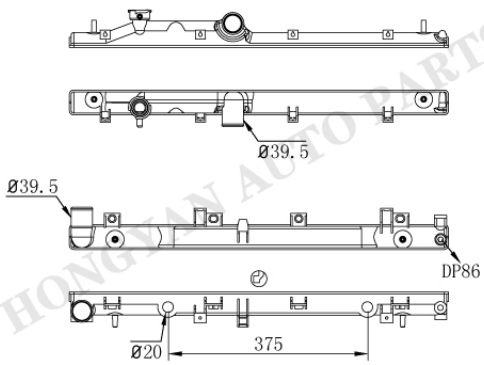

Tank size :(R8.5×5×4×46.8×713)
OEM :
DPI :
NISSENS :
APPLICATION :

SU-0038AT/MT

SU-0055AT/MT

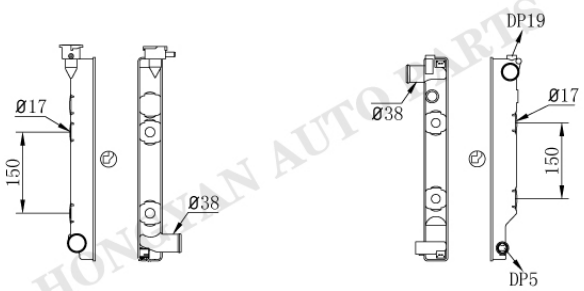

Tank size :(R9×5×5×46×383)
OEM :45111AA181 45111AA190F
45199AA080/100/101/110/120
DPI :1183 2152
NISSENS :
APPLICATION :
90-94 SUBARU LEGACY 2.2L

SU-0022AT/MT

SU-0055-1AT/MT

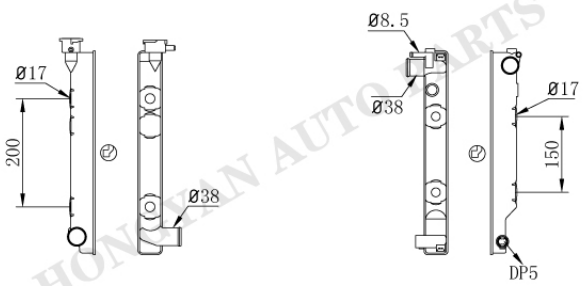

Tank size :(R9×5×5×46×383)
OEM :
DPI :
NISSENS :
APPLICATION :
90-94 SUBARU LEGACY 2.2L

SU-0024AT/MT

SU-0056

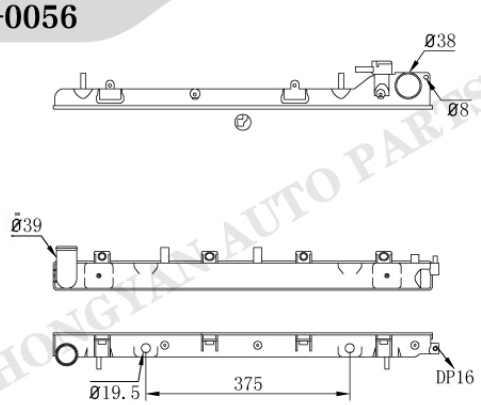

Tank size :(R8.5×5×4.5×47/57×713)
OEM :
DPI :13026
NISSENS :
APPLICATION :
06-08 SUBARU FORESTER 2.5L

SU-0017AT/MT

HONGYAN AUTO PARTS

SU-0057

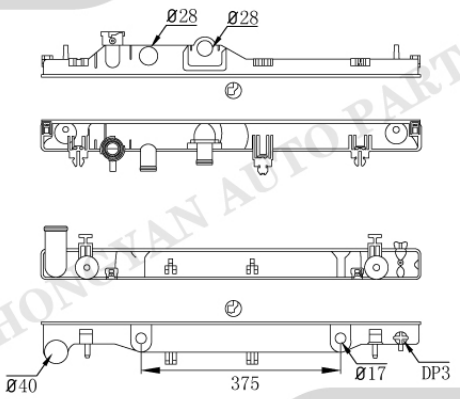

SU-0058AT/MT

Tank size :(R9×4×5×44×713)
OEM :
DPI :13460
NISSENS :
APPLICATION :
15-16 SUBARU LEGACY 3.6L
15-16 SUBARU OUTBACK 3.6L

SU-0059

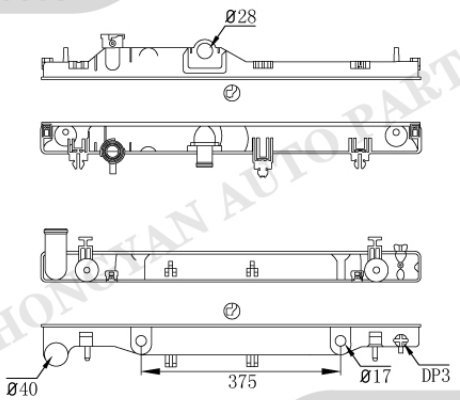

SU-0058AT/MT

Tank size :(R9×4×5×44×713)
OEM :
DPI :13461
NISSENS :
APPLICATION :
15-16 SUBARU LEGACY 3.6L
15-16 SUBARU OUTBACK 3.6L

Tank size :
OEM :
DPI :
NISSENS :
APPLICATION :

Tank size :
OEM :
DPI :
NISSENS :
APPLICATION :

HONGYAN AUTO PARTS

SUZUKI

SUZ-0001

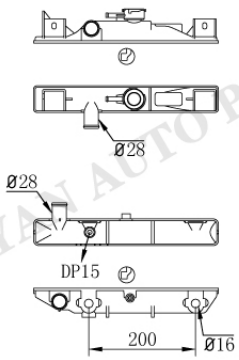

Tank size :(R6.5×5×5×50×346.5)
OEM :1770060B11 1770063B00
96062081/333 96066413
DPI :1444
NISSENS :
APPLICATION :
90-94 SUZUKI SWIFT 1.0/1.3L
89-94 PONTIAC FIREFLY 1.0/1.3L
89-94 GEO METRO 1.0/1.3L

SUZ-0002AT/MT

SUZ-0003

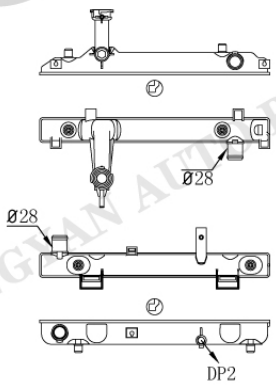

Tank size :(R6.5×5×5×46.5×432)
OEM :1770068K00 214004A00D
DPI :
NISSENS :69401
APPLICATION :
09-15 SUZUKI ALTO 1.1L
09-14 NISSAN PIXO 1.1L

SUZ-0004

SUZ-0005

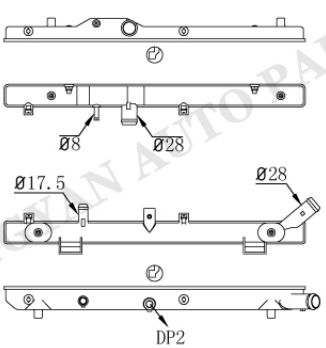

Tank size :(R6.5×5×5×44×566)
OEM :1770072K50
DPI :
NISSENS :69404
APPLICATION :
05-10 SUZUKI SWIFT 1.3L(DIESEL)

SUZ-0006

SUZ-0005

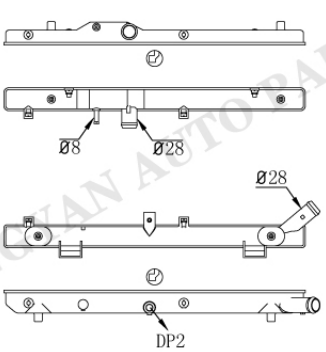

Tank size :(R6.5×5×5×44×566)
OEM :
DPI :
NISSENS :
APPLICATION :
05-10 SUZUKI SWIFT 1.3L(DIESEL)

SUZ-0007

SUZ-1

HONGYAN AUTO PARTS

SUZ-0008

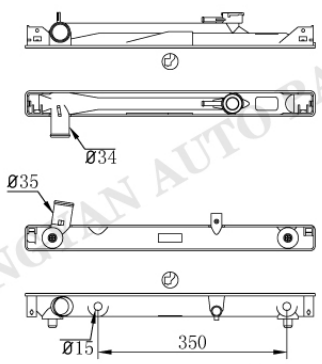

SUZ-0009AT/MT

Tank size :(R9×4×5×48×544)
OEM : 1770056B12 1770065D20/E10
1770077E10/20/30 91174506/7
DPI :2087 2506
NISSENS :64159
APPLICATION :
99-01 SUZUKI GRAND VITARA 2.5L
96-98 SUZUKI SIDEKICK 1.8L
99-03 SUZUKI VITARA 1.6/1.8/2.0L
98-08 CHEVROLET TRACKER 1.6/2.0L

SUZ-0008

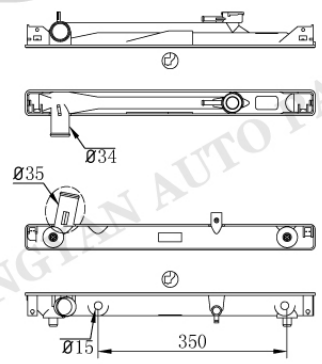

SUZ-0010AT/MT

Tank size :(R9×4×5×48×544)
OEM :
DPI :
NISSENS :
APPLICATION :
99-01 SUZUKI GRAND VITARA 2.5L
96-98 SUZUKI SIDEKICK 1.8L
99-03 SUZUKI VITARA 1.6/1.8/2.0L
98-08 CHEVROLET TRACKER 1.6/2.0L

SUZ-0011

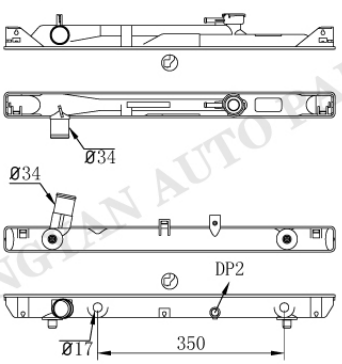

SUZ-0012AT/MT

Tank size :(R8.5×4×5×48×620.5)
OEM : 1770052D00/10/11/20/21/30/31
1770065D20/30 1770066D20/30
DPI :2430
NISSENS :
APPLICATION :
00-05 SUZUKI GRAND VITARA 2.5L
01-03 SUZUKI VITARA 1.6/1.8/2.0L

SUZ-0013

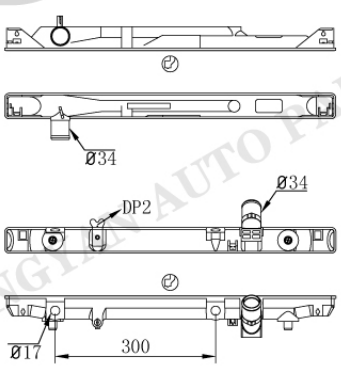

SUZ-0014AT/MT

Tank size :(R8.5×4×5×48×620.5)
OEM :1770052D21/30/31
DPI :2933
NISSENS :
APPLICATION :
04-05 SUZUKI XL-7 2.7L

HONGYAN AUTO PARTS

SUZUKI

SUZ-0015

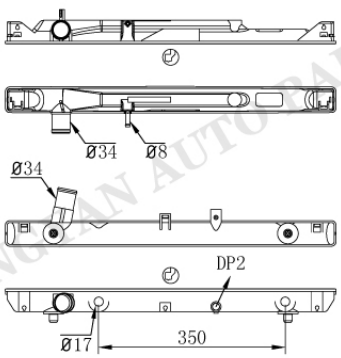

SUZ-0012AT/MT

Tank size :(R8.5×4×5×48×620.5)
OEM :
DPI :
NISSENS :
APPLICATION :
01-05 SUZUKI GRAND VITARA 2.0L(DIESEL)
01-05 SUZUKI GRAND ESCUDO 2.0L(DIESEL)

SUZ-0016

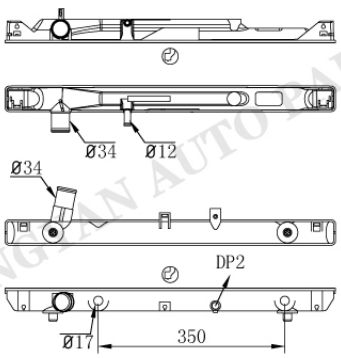

SUZ-0012AT/MT

Tank size :(R8.5×4×5×48×620.5)
OEM :
DPI :
NISSENS :
APPLICATION :
01-05 SUZUKI GRAND VITARA 2.0L(DIESEL)
01-05 SUZUKI GRAND ESCUDO 2.0L(DIESEL)

SUZ-0017

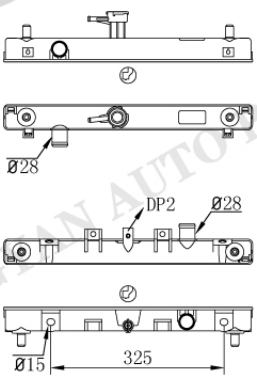

SUZ-0018AT/MT

Tank size :(R9×4×5×48×467)
OEM :
DPI :
NISSENS :
APPLICATION :
09- SUZUKI CARRY

SUZ-0019

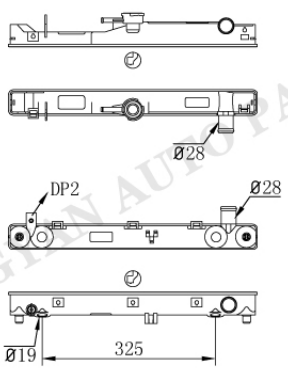

SUZ-0020AT/MT

Tank size :(R9×4×5×48×467)
OEM :1770080A00 1770081A00
1770082A00
DPI :
NISSENS :64162
APPLICATION :
98-06 SUZUKI JIMNY 1.3L

HONGYAN AUTO PARTS

SUZUKI

SUZ-0021

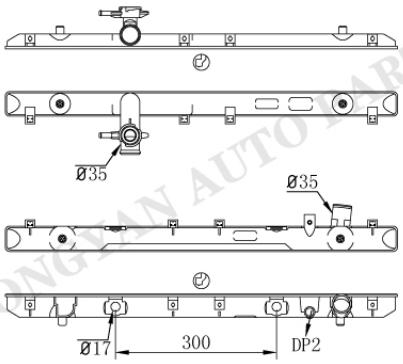

SUZ-0022AT/MT

Tank size :(R9×4×5×48×736)
OEM :1770054G20 1770054G30
DPI :2451
NISSENS :
APPLICATION :
02-06 SUZUKI AERIO 2.0/2.3L

SUZ-0021

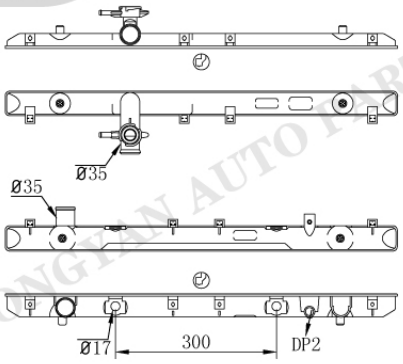

SUZ-0023AT/MT

Tank size :(R9×4×5×48×736)
OEM :1770054G00 1770054G10
DPI :
NISSENS :64167A 64166A
APPLICATION :
02-07 SUZUKI AERIO 1.3/1.5/1.6L

SUZ-0024

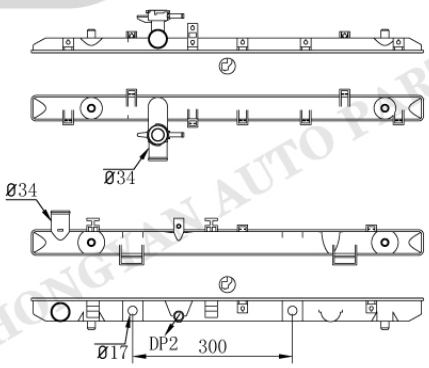

SUZ-0025AT/MT

Tank size :(R8×4×5×48×736)
OEM :1770079J00 1770080JB0
DPI :
NISSENS :64179
APPLICATION :
07-09 SUZUKI SX4 1.5/1.6L

SUZ-0024

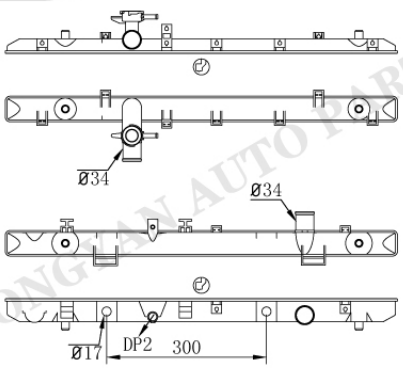

SUZ-0026AT/MT

Tank size :(R8×4×5×48×736)
OEM :1770080J10 1770080J00
DPI :2980
NISSENS :64205
APPLICATION :
07-09 SUZUKI SX4 2.0L

HONGYAN AUTO PARTS

SUZUKI

SUZ-0027

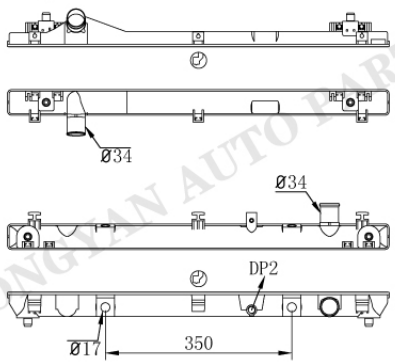

SUZ-0028AT/MT

Tank size :(R8×4×5×48×716.5)
OEM :1770066J10
DPI :2920
NISSENS :64202
APPLICATION :
06-13 SUZUKI GRAND VITARA 2.4/2.7/3.2L

SUZ-0027

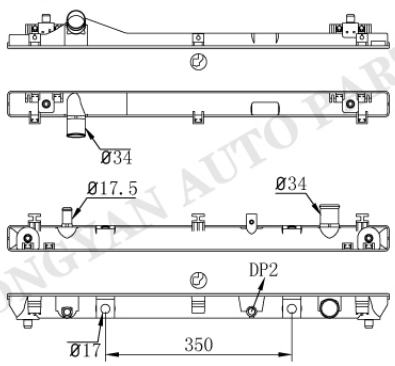

SUZ-0029AT/MT

Tank size :(R8×4×5×48×716.5)
OEM :
DPI :
NISSENS :
APPLICATION :
06-13 SUZUKI GRAND VITARA 2.4/2.7/3.2L

SUZ-0027

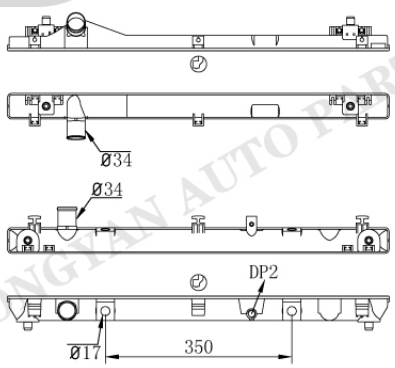

SUZ-0030AT/MT

Tank size :(R8×4×5×48×716.5)
OEM :1770065J10
DPI :13136
NISSENS :64199 64200
APPLICATION :
09-15 SUZUKI GRAND VITARA 2.0/2.4L

SUZ-0027

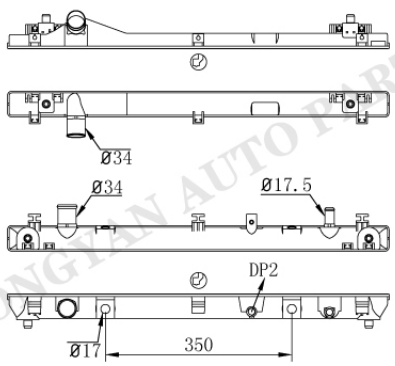

SUZ-0031AT/MT

Tank size :(R8×4×5×48×716.5)
OEM :1770067J00
DPI :
NISSENS :64201
APPLICATION :
05-10 SUZUKI GRAND VITARA 1.9L(DIESEL)

HONGYAN AUTO PARTS

SUZUKI

SUZ-0032

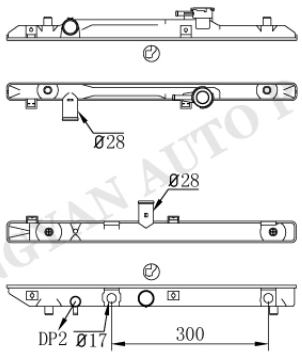

SUZ-0033AT/MT

Tank size :(R8.5×4×5×33/40×544)
OEM :1770060G01/10/12 1770062G01
1770063G00/12/20/31
DPI :2085 2084
NISSENS :64176 64177
APPLICATION :
95-01 SUZUKI ESTEEM 1.6L

SUZ-0034

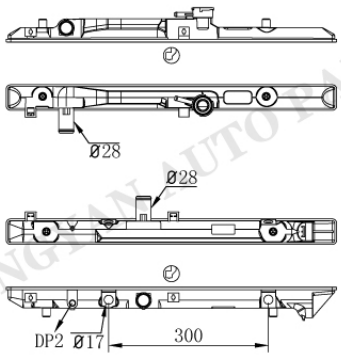

SUZ-0035AT/MT

Tank size :(R8.5×4×5×48×621)
OEM :1770063G12
DPI :
NISSENS :64193
APPLICATION :
96-02 SUZUKI BALENO 1.3/1.6L

SUZ-0036

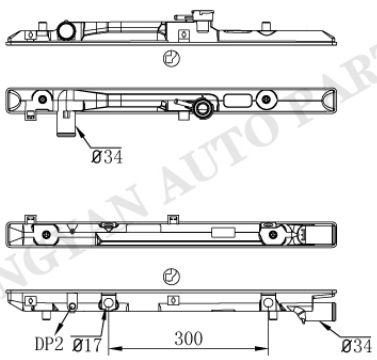

SUZ-0037AT/MT

Tank size :(R8.5×4×5×48×621)
OEM :1770062G01
DPI :
NISSENS :64168
APPLICATION :
96-02 SUZUKI BALENO 1.8L

SUZ-0038

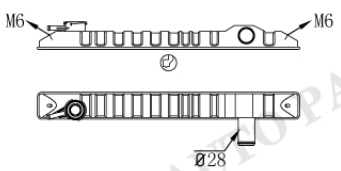

Tank size :(R8.5×5×4.5×51×492)
OEM :
DPI :
NISSENS :
APPLICATION :
SUZUKI

HONGYAN AUTO PARTS

SUZUKI

SUZ-0040

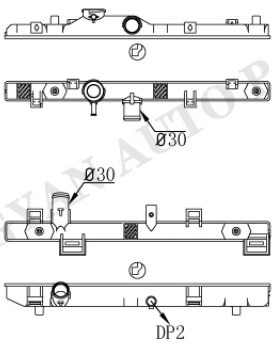

SUZ-0041

Tank size :(R6.5×5×5×39.5×498)
OEM :
DPI :
NISSENS :
APPLICATION :
SUZUKI MARUTI RITZ

SUZ-0042

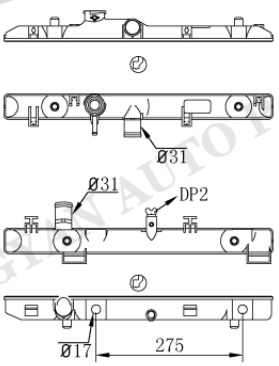

SUZ-0043AT/MT

Tank size :(R8.5×4×5×48×505)
OEM : 1770073KB0 4709363 93194258
DPI :
NISSENS :630706 630707
APPLICATION :
08-15 SUZUKI SPLASH 1.2L
08-15 OPEL AGILA 1.2

SUZ-0044

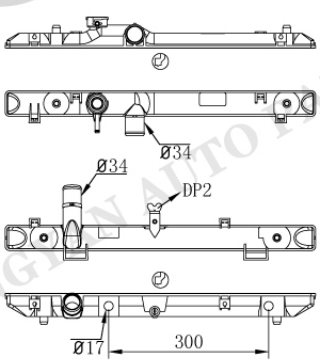

SUZ-0045AT/MT

Tank size :(R8.5×4×5×48×582.5)
OEM :1770062J00 1770063J00/20
1770068J00
DPI :
NISSENS :69400 641755
APPLICATION :
05-11 SUZUKI SWIFT 1.3L

SUZ-0046

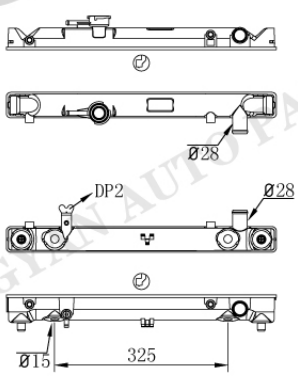

SUZ-0047AT/MT

Tank size :(R8.5×4×5×48×507)
OEM :1770060A12
DPI :2089
NISSENS :64079
APPLICATION :
96-98 SUZUKI X-90 1.6L

HONGYAN AUTO PARTS

SUZ-0048

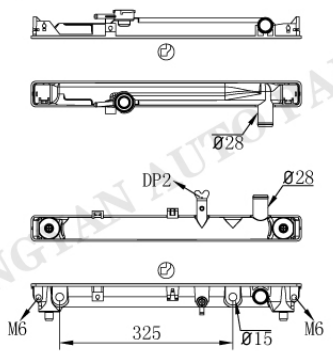

SUZ-0049AT/MT

Tank size :(R8.5×4×5×48×507)
OEM :1770056B01/02/11/12
1770077E00/10/20/30
DPI :1864 2088
NISSENS :
APPLICATION :
92-98 SUZUKI SIDEKICK 1.6L
94-97 GEO TRACKER 1.6L

SUZ-0050

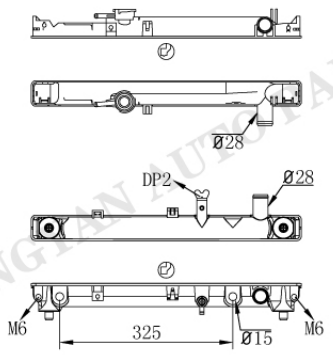

SUZ-0049AT/MT

Tank size :(R8.5×4×5×48×507)
OEM :
DPI :
NISSENS :
APPLICATION :
92-98 SUZUKI SIDEKICK 1.6L

SUZ-0051

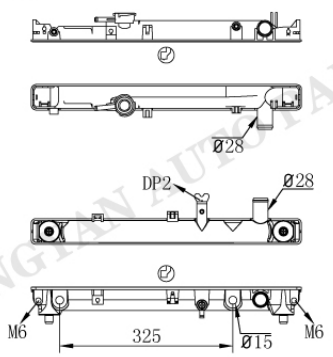

SUZ-0049AT/MT

Tank size :(R8.5×4×5×48×507)
OEM :
DPI :
NISSENS :
APPLICATION :
92-98 SUZUKI SIDEKICK 1.6L

SUZ-0052

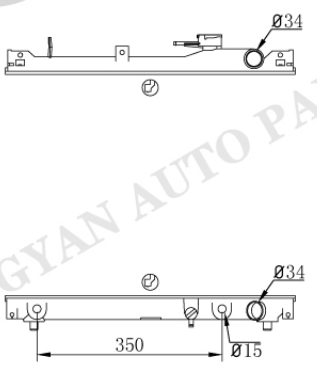

SUZ-0053AT/MT

Tank size :(R9×4×5×48×544)
OEM :
DPI :13028
NISSENS :
APPLICATION :
99-03 SUZUKI VITARA 1.6L

HONGYAN AUTO PARTS

SUZUKI

SUZ-0001

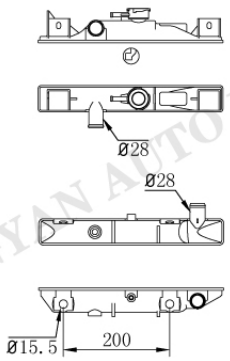

Tank size :(R6.5×5×5×50×346.5)
OEM :1770063B11/E00/E10
DPI :1168
NISSENS :
APPLICATION :
90-94 SUZUKI SWIFT 1.0/1.3L

SUZ-0054AT/MT

SUZ-0055



Tank size :(R7×5×4.8×57.5×351)
OEM :
DPI :
NISSENS :
APPLICATION :
SUZUKI ALTO/WAGONR

SUZ-0056

SUZ-0057



Tank size : (R9×4.5×5×44.7×338.5)
OEM :
DPI :
NISSENS :
APPLICATION :
SUZUKI ALTO/WAGONR

SUZ-0058

SUZ-0059

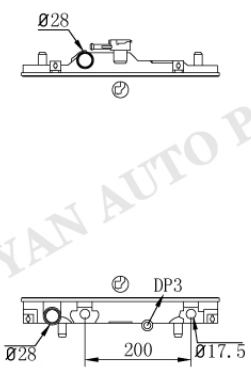

Tank size :(R9×4×5×47.8×370.5)
OEM :1770050G00/20/30/40
DPI :1732
NISSENS :
APPLICATION :
95-99 SUZUKI SWIFT 1.3L

SUZ-0060AT/MT

HONGYAN AUTO PARTS

SUZ-9

SUZ-0061

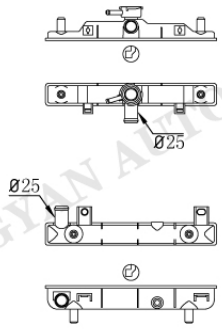

SUZ-0062

Tank size :(R5×4.8×5×42×320.5)
OEM :
DPI :
NISSENS :
APPLICATION :
SUZUKI

SUZ-0063

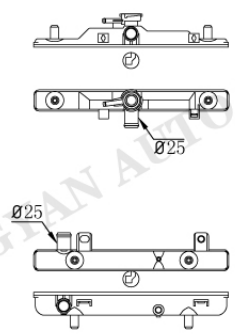

SUZ-0064

Tank size :(R9×4.4×5×39.6×365)
OEM :
DPI :
NISSENS :
APPLICATION :
SUZUKI CARRY/EVERY

SUZ-0065

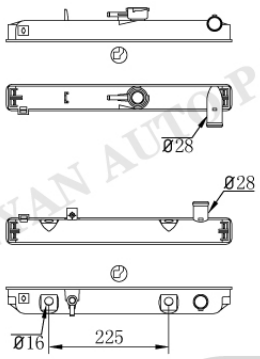

SUZ-0066AT/MT

Tank size :(R10×5×4.5×49.5×423)
OEM :
DPI :
NISSENS :
APPLICATION :
SUZUKI JIMNY

SUZ-0067

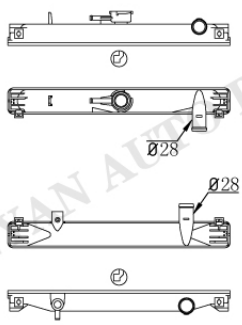

SUZ-0068

Tank size :(R7×4.5×5×49.5×417)
OEM :
DPI :
NISSENS :
APPLICATION :
SUZUKI JIMNY

HONGYAN AUTO PARTS

SUZUKI

SUZ-0069

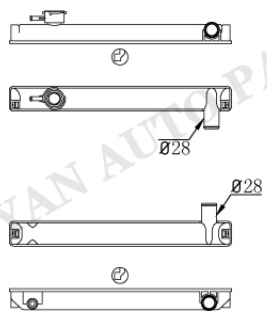

SUZ-0070

Tank size :(R8×4×5×47×417)
OEM :
DPI :
NISSENS :
APPLICATION :
SUZUKI CARRY

SUZ-0071

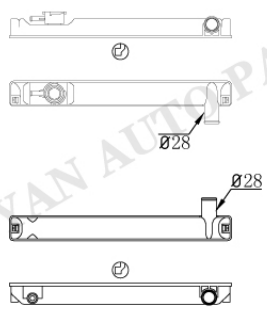

SUZ-0070

Tank size :(R8×4×5×47×417)
OEM :
DPI :
NISSENS :
APPLICATION :
SUZUKI CARRY

SUZ-0072

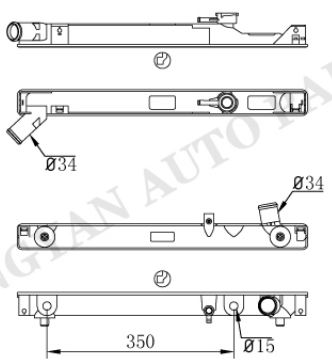

SUZ-0073AT/MT

Tank size :(R8.5×4×4.5×48×544)
OEM :1770078E20
DPI :
NISSENS :64165
APPLICATION :
94-98 SUZUKI ESCUDO 2.0L(DIESEL)
98-05 SUZUKI GRAND ESCUDO 2.0L(DIESEL)
94-98 SUZUKI VITARA 2.0L(DIESEL)
98-05 SUZUKI GRAND VITARA 2.0L(DIESEL)

SUZ-0074

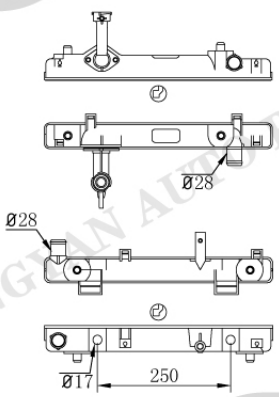

SUZ-0075AT/MT

Tank size :(R8×5×4×48×428)
OEM :
DPI :
NISSENS :
APPLICATION :
12- SUZUKI ALTO

HONGYAN AUTOPARTS

SUZ-11

SUZ-0076

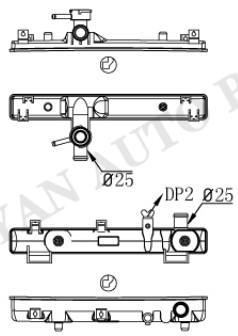

SUZ-0077

Tank size :(R9×4×4.8×48×371)
OEM :1770079F00/01/02
17700M79F02
DPI :
NISSENS :64204
APPLICATION :
02-08 SUZUKI ALTO 1.1L

SUZ-0076

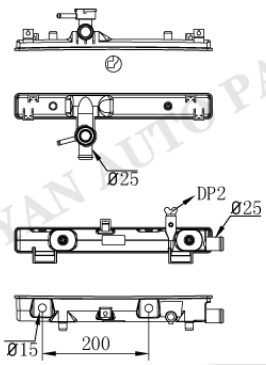

SUZ-0078AT/MT

Tank size :(R9×4×4.8×48×371)
OEM :1770075F00 1770076G20
DPI :
NISSENS :64175A
APPLICATION :
98-02 SUZUKI WAGON R 1.2L

SUZ-0076

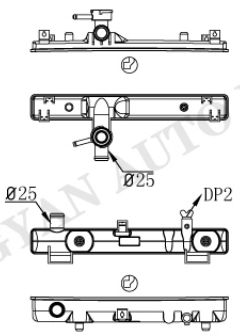

SUZ-0079

Tank size :(R9×4×4.8×48×371)
OEM :
DPI :
NISSENS :
APPLICATION :
98-02 SUZUKI WAGON R 1.2L

SUZ-0080

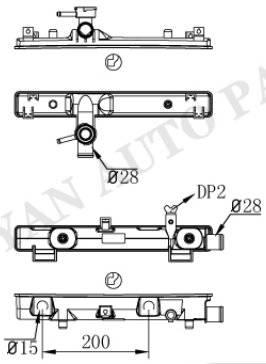

SUZ-0081AT/MT

Tank size :(R9×4×4.8×48×371)
OEM :1770083G00/10/30/31
DPI :
NISSENS :
APPLICATION :
98-02 SUZUKI WAGON R 1.2L

HONGYAN AUTO PARTS

SUZUKI

SUZ-0082

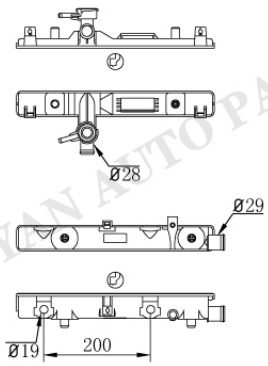

Tank size :(R9×4×4.5×48×371)
OEM :
DPI :
NISSENS :
APPLICATION :
SUZUKI WAGON R

SUZ-0083AT/MT

SUZ-0084

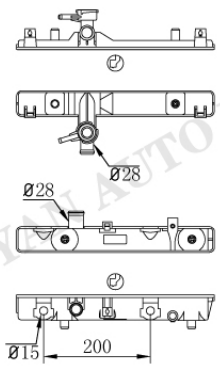

Tank size :(R9×4×4.5×48×371)
OEM :1770080G00
DPI :
NISSENS :64159
APPLICATION :
00-03 SUZUKI IGNIS 1.3L

SUZ-0085AT/MT

SUZ-0086

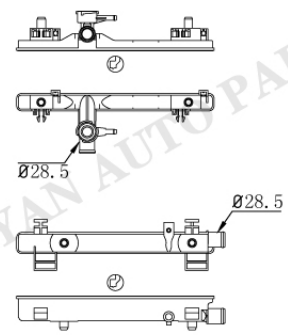

Tank size :(R9×4×4.5×33/40×371)
OEM :
DPI :
NISSENS :
APPLICATION :
SUZUKI

SUZ-0087

SUZ-0088

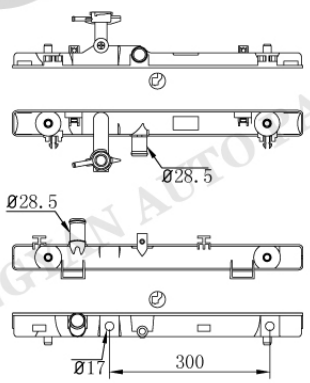

Tank size :(R9×4×4.5×48×543.5)
OEM :1770071L10
DPI :
NISSENS :64258
APPLICATION :
10-15 SUZUKI SWIFT 1.2L

SUZ-0089AT/MT

HONGYAN AUTO PARTS

SUZ-13

SUZ-0090

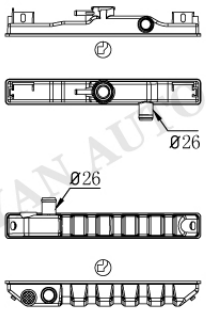

SUZ-0091

Tank size :(R7×5×5×46.5×367)
OEM :1770084200
DPI :
NISSENS :
APPLICATION :
85- SUZUKI ALTO

SUZ-0092

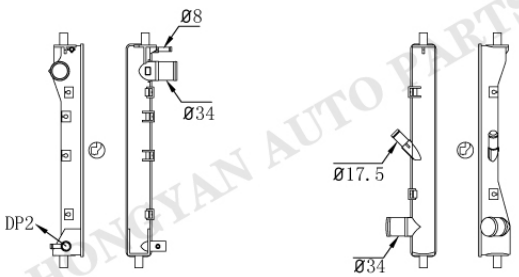

SUZ-0093

Tank size :(R9.5×4×5×48×400)
OEM :71750368
DPI :
NISSENS :64256
APPLICATION :
09- SUZUKI SX-4 2.0L

SUZ-0094

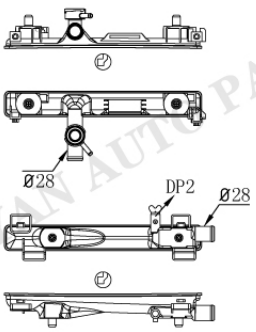

SUZ-0095

Tank size :(R9×4×4.8×48×371)
OEM :
DPI :
NISSENS :
APPLICATION :
SUZUKI

SUZ-0096

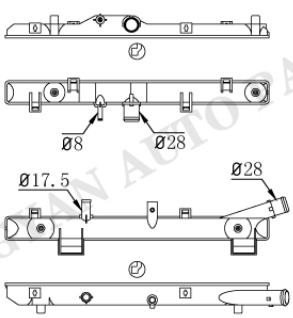

SUZ-0097

Tank size :(R6.5×5×5×44×495.5)
OEM :
DPI :
NISSENS :
APPLICATION :
05- SUZUKI SX4

HONGYAN AUTO PARTS

SUZUKI

SUZ-0098

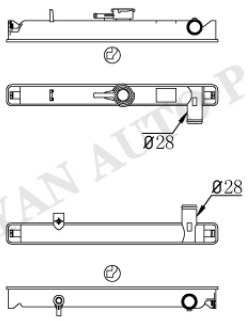

SUZ-0099

Tank size :(R10×5×5×40×397)
OEM :
DPI :
NISSENS :
APPLICATION :
SUZUKI JIMMY

SUZ-0100

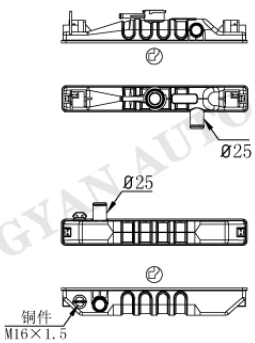

SUZ-0101

Tank size :(R8.5×4.5×5×47.8×349)
OEM :1770084200
DPI :
NISSENS :
APPLICATION :
86-93 SUZUKI ALTO

SUZ-0102

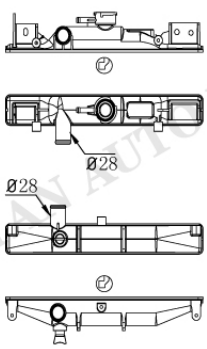

SUZ-0103

Tank size :(R9×5×4.5×49.5×371.5)
OEM :1770060B21/2
DPI :
NISSENS :
APPLICATION :
89-01 SUZUKI SWIFT

SUZ-0104

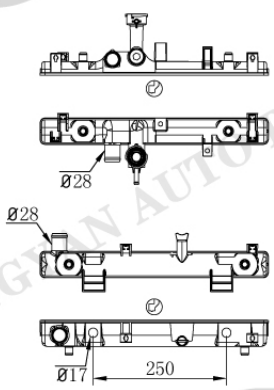

SUZ-0105AT/MT

Tank size :(R9×4×4.5×48×429)
OEM :
DPI :
NISSENS :
APPLICATION :
13- SUZUKI NAHLO

HONGYAN AUTO PARTS

SUZ-15

SUZ-0106

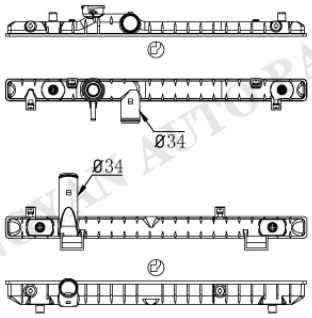

SUZ-0107

Tank size :(R7×5×5×40×566)
OEM :
DPI :
NISSENS :
APPLICATION :
05- SUZUKI SWIFT

SUZ-0108

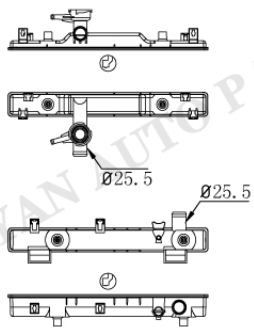

SUZ-0109

Tank size :(R6.5×5×5×44×376)
OEM :
DPI :
NISSENS :
APPLICATION :
05- SUZUKI ALTO

SUZ-0110

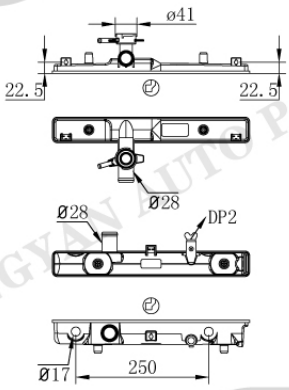

SUZ-0111AT/MT

Tank size :(R9×4×4.8×48×371)
OEM :1770080G00
DPI :
NISSENS :
APPLICATION :
SUZUKI SWIFT

SUZ-0112

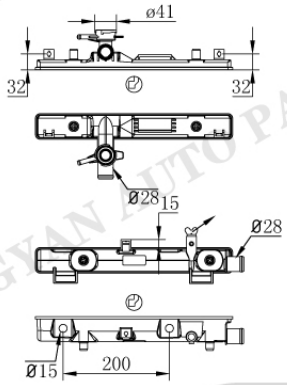

SUZ-0081AT/MT

Tank size :(R9×4×4.8×48×371)
OEM :1770058550/83G50/82K00
DPI :
NISSENS :
APPLICATION :

HONGYAN AUTO PARTS

SUZUKI

SUZ-0113

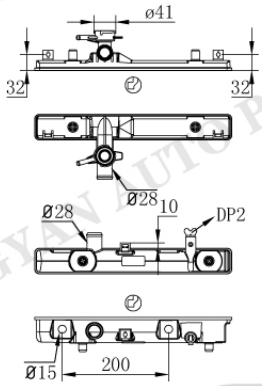

SUZ-0085AT/MT

Tank size :(R9×4×4.8×48×371)
OEM :
DPI :
NISSENS :
APPLICATION :

SUZ-0040

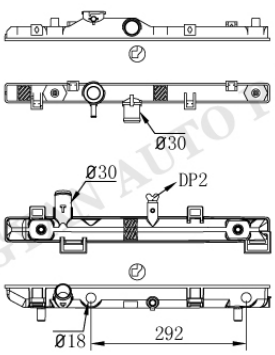

SUZ-0114AT/MT

Tank size :(R6.5×5×5×46.5×498)
OEM :
DPI :
NISSENS :
APPLICATION :
SUZUKI

SUZ-0115

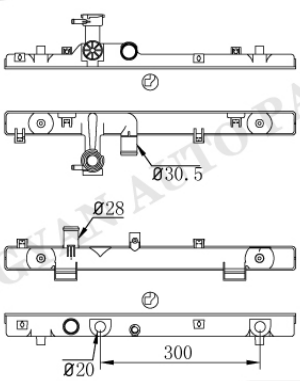

SUZ-0116AT/MT

Tank size :(R7×4.5×4×45×546.5)
OEM :1770069L00/01/20/21
DPI :
NISSENS :641758 669402
APPLICATION :
10- SUZUKI SWIFT 1.2/1.6L

SUZ-0115

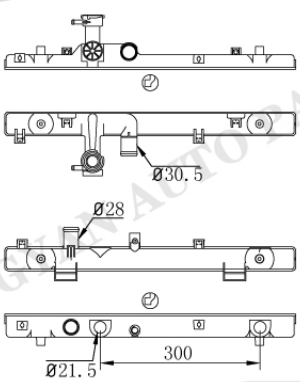

SUZ-0116-1AT

Tank size :(R7×4.5×4×45×546.5)
OEM :
DPI :
NISSENS :
APPLICATION :
10- SUZUKI SWIFT 1.2/1.6L

HONGYAN AUTO PARTS

SUZ-0117

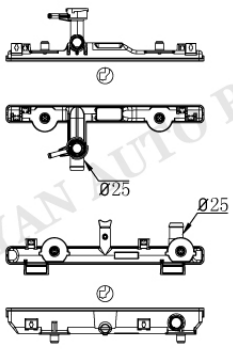

SUZ-0118

Tank size :(R9×4×4.5×33×372)
OEM :
DPI :
NISSENS :
APPLICATION :
SUZURI ALTO 800

SUZ-0119

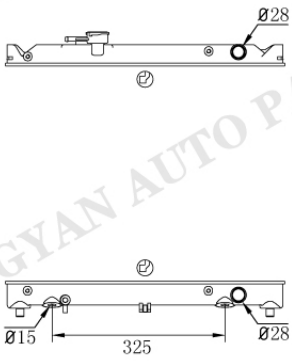

SUZ-0120AT/MT

Tank size :(R5×5×5×49.5×525)
OEM :1770060A11
DPI :1118
NISSENS :
APPLICATION :
89-98 SUZUKI SIDEKICK 1.6L
94-95 PONTIAC SUNRUNNER 1.6L
89-93 GEO TRACKER 1.6L
89-91 CHEVROLET TRACKER 1.6L
92-93 ASUNA SUNRUNNER 1.6L

SUZ-0121

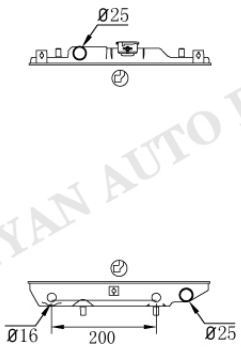

SUZ-0122AT/MT

Tank size :(R8×4×5×33/48×342)
OEM :1770060D10
DPI :
NISSENS :
APPLICATION :
95-97 SUZUKI ALTO/CERVO MODE

SUZ-0123



SUZ-0124

Tank size :(R9×4×5×40/50×376)
OEM :1770060B21/2
DPI :
NISSENS :
APPLICATION :
89-01 SUZUKI SWIFT

HONGYAN AUTO PARTS

SUZUKI

SUZ-0125

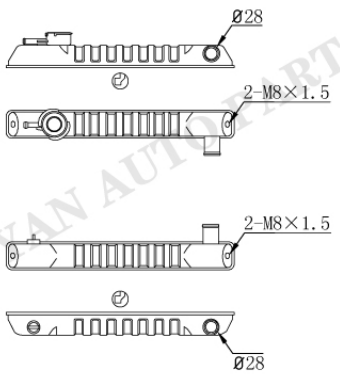

SUZ-0126

Tank size :(R8×4×5×48×428.6)
OEM :
DPI :
NISSENS :
APPLICATION :
SUZUKI CARRY

SUZ-0127



SUZ-0128

Tank size :(R9×4×5×32.5/47.2×342)
OEM :
DPI :
NISSENS :
APPLICATION :

SUZ-0129

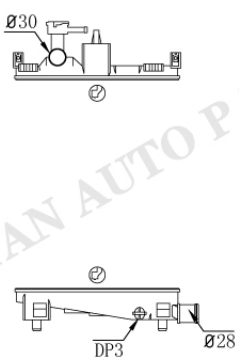

SUZ-0130

Tank size :(R9×4×5×31.3×310)
OEM :
DPI :
NISSENS :
APPLICATION :

SUZ-0131

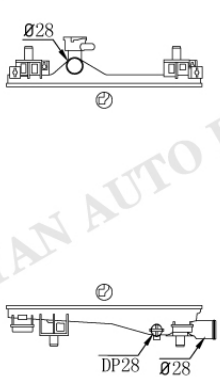

SUZ-0132

Tank size :(R10×4.3×4.8×30.5×368)
OEM :
DPI :
NISSENS :
APPLICATION :

HONGYAN AUTO PARTS

SUZ-0076

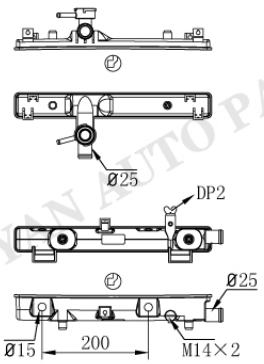

SUZ-0133AT/MT

Tank size :(R9×4×4.5×48×371)
OEM :
DPI :
NISSENS :
APPLICATION :
00-05 ALTO LE-HA23V/HA23S

SUZ-0134

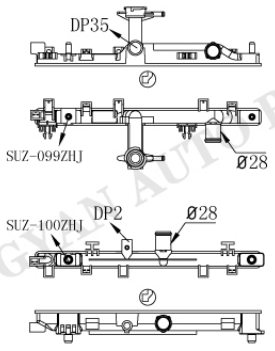

SUZ-0135

Tank size :(R9×4×5×31.5×425.5)
OEM :214105196R
DPI :
NISSENS :641777
APPLICATION :
14- SUZUKI CELERIO

Tank size :
OEM :
DPI :
NISSENS :
APPLICATION :

Tank size :
OEM :
DPI :
NISSENS :
APPLICATION :

HONGYAN AUTO PARTS

TATA

TA-0001



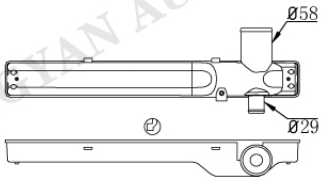

Tank size : (R8.5×4.5×4.5×69×553)
OEM :
DPI :
NISSENS :
APPLICATION :
TATA

TA-0002

TA-0003

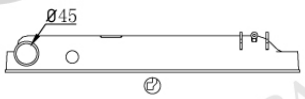

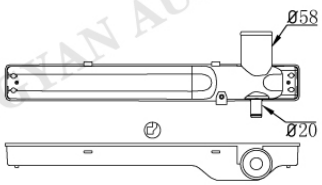

Tank size : (R8.5×4.5×4.5×69×553)
OEM :
DPI :
NISSENS :
APPLICATION :
TATA

TA-0004

TA-0005



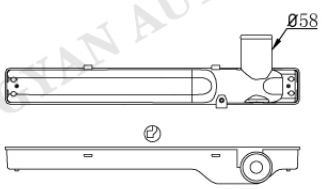

Tank size : (R8.5×4.5×4.5×69×553)
OEM :
DPI :
NISSENS :
APPLICATION :
TATA

TA-0006

TA-0007

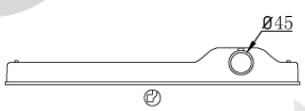

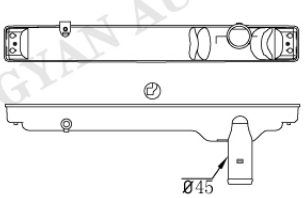

Tank size : (R8.5×4.5×4.5×69×553)
OEM :
DPI :
NISSENS :
APPLICATION :
TATA

TA-0008

HONGYAN AUTO PARTS

TA-1

TA-0009

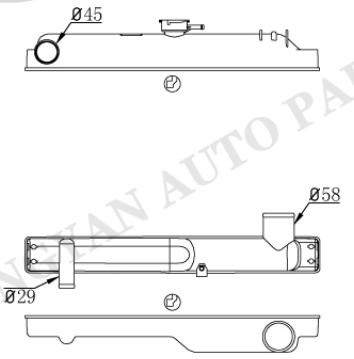

TA-0010

Tank size : (R8.5×4.5×4.5×69×553)
OEM :
DPI :
NISSENS :
APPLICATION :
TATA

TA-0011

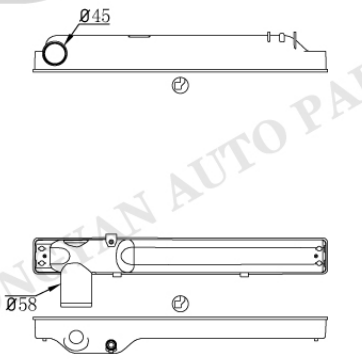

TA-0012

Tank size : (R8.5×4.5×4.5×69×553)
OEM :
DPI :
NISSENS :
APPLICATION :
TATA

TA-0013

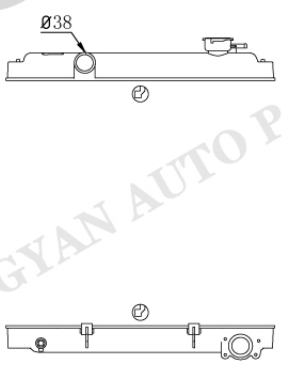

TA-0014

Tank size : (R8.5×4.5×4.5×69×505)
OEM :
DPI :
NISSENS :
APPLICATION :
TATA

TA-0015

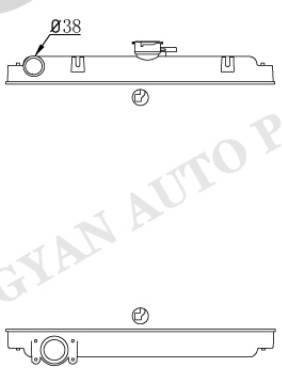

TA-0016

Tank size : (R8.5×4.5×4.5×69×505)
OEM :
DPI :
NISSENS :
APPLICATION :
TATA

HONGYAN AUTO PARTS

TATA

TA-0017



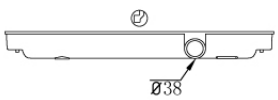

TA-0018

Tank size : (R8.5×4.5×4.5×69×505)
OEM :
DPI :
NISSENS :
APPLICATION :
TATA

TA-0019



Tank size : (R8.5×4.5×4.5×69×505)
OEM :
DPI :
NISSENS :
APPLICATION :
TATA

TA-0021

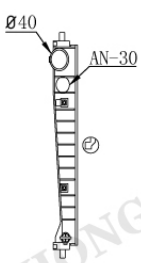

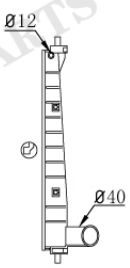

TA-0022

Tank size :(R×××40×376)
OEM :
DPI :
NISSENS :
APPLICATION :
TATA

TA-0023



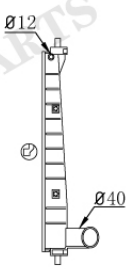

TA-0022

Tank size :(R×××40×376)
OEM :
DPI :
NISSENS :
APPLICATION :
TATA

HONGYAN AUTO PARTS

TA-0024



TA-0025

Tank size : (R9×4.5×5×42×381)
OEM :
DPI :
NISSENS :
APPLICATION :
TATA

TA-0026

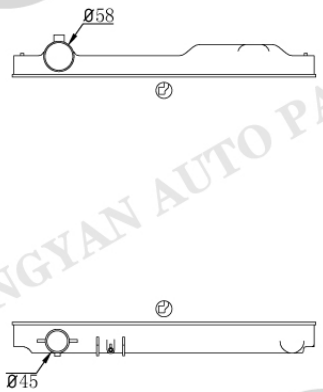

TA-0027

Tank size : (R9×4.5×5×69.5×570.5)
OEM :
DPI :
NISSENS :
APPLICATION :
TATA

TA-0028

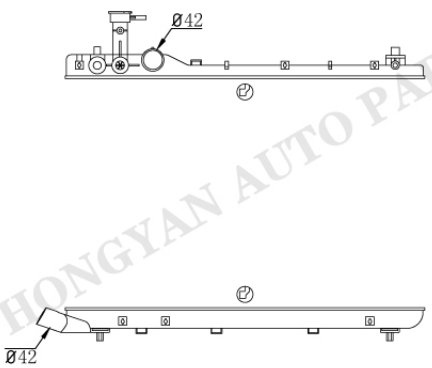

TA-0029

Tank size : (R9×4×5×35×675)
OEM :
DPI :
NISSENS :
APPLICATION :
TATA

TA-0030

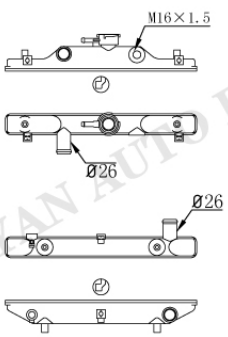

TA-0031

Tank size : (R9×4.4×4.5×39.5×359)
OEM :
DPI :
NISSENS :
APPLICATION :
TATA ACE

HONGYAN AUTO PARTS

TATA

TA-0032

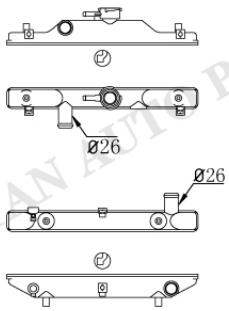

TA-0031

Tank size :(R9×4.4×4.5×39.5×359)
OEM :
DPI :
NISSENS :
APPLICATION :
TATA ACE

TA-0033

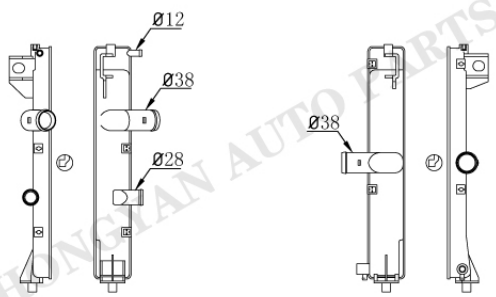

TA-0034

Tank size :(R8.5×4.5×4.5×69×436)
OEM :
DPI :
NISSENS :
APPLICATION :
TATA TRUCK

TA-0035

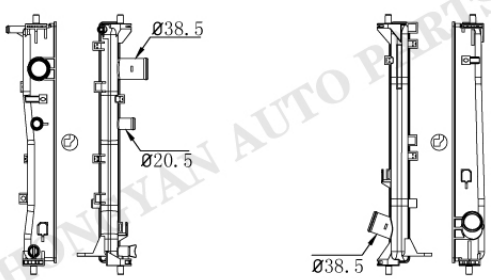

TA-0036

Tank size :(R9×4.5×5×40×451.5)
OEM :
DPI :
NISSENS :
APPLICATION :
TATA INDICA

TA-0037

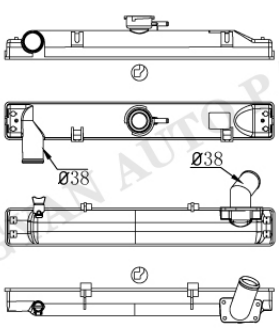

TA-0038

Tank size :(R8.5×5×5×69×505)
OEM :
DPI :
NISSENS :
APPLICATION :
TATA SUMO

HONGYAN AUTO PARTS

TOYOTA/LEXUS/HINO/SCION

TO-0001

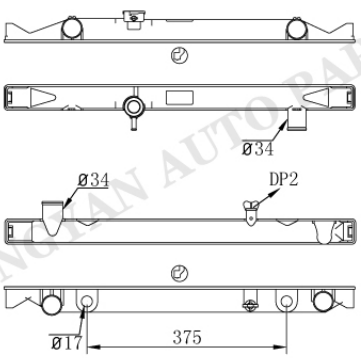

TO-0002AT/MT

Tank size :(R9×4×5×48×660)
OEM :1640075160/80
DPI :1998 2207
NISSENS :647551
APPLICATION :
96-02 TOYOTA 4RUNNER 2.7/3.4L
96-02 TOYOTA LAND CRUISER 3.4L

TO-0003

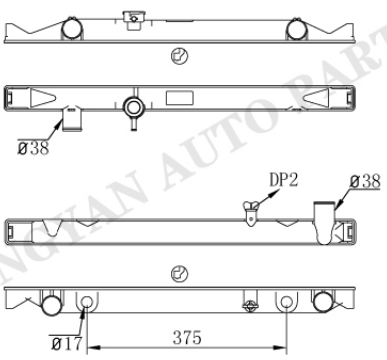

TO-0004AT/MT

Tank size :(R9×4×5×48×660)
OEM :1640067121/120/130
DPI :
NISSENS :64636A 64637A
APPLICATION :
96-02 TOYOTA LAND CRUISER 3.0L

TO-0005

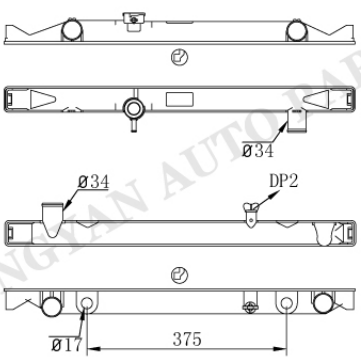

TO-0006AT/MT

Tank size :(R9×5×5×50×660)
OEM :
DPI :
NISSENS :
APPLICATION :
96-02 TOYOTA 4RUNNER 2.7/3.4L
96-02 TOYOTA LAND CRUISER 3.4L

TO-0007

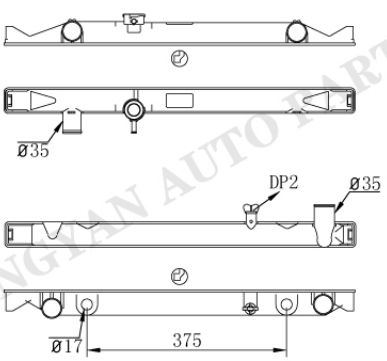

TO-0008AT/MT

Tank size : (R9×5×5×50×660)
OEM :
DPI :
NISSENS :
APPLICATION :
96-02 TOYOTA LAND CRUISER 3.0L

HONGTIAN AUTO PARTS

TOYOTA/LEXUS/HINO/SCION

TO-0009

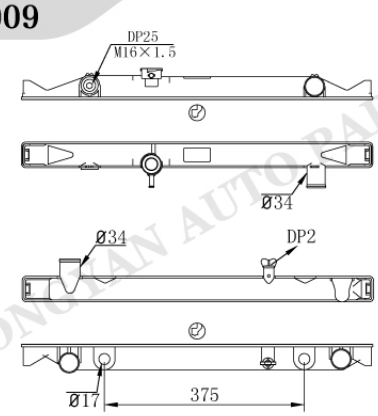

TO-0002AT/MT

Tank size :(R9×4×5×48×660)
OEM :
DPI :
NISSENS :
APPLICATION :

TO-0010

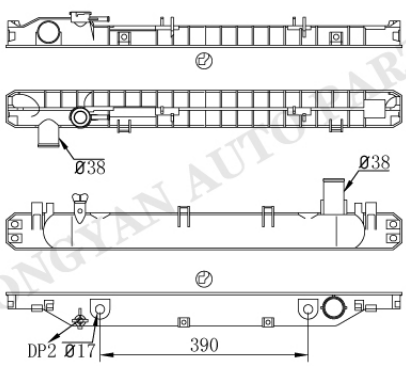

TO-0011AT/MT

Tank size :(5×4.5×69.5×744)
OEM :1640061170/17404/30/60
DPI :1469
NISSENS :64861
APPLICATION :
91-98 TOYOTA LAND CRUISER 4.0L

TO-0012

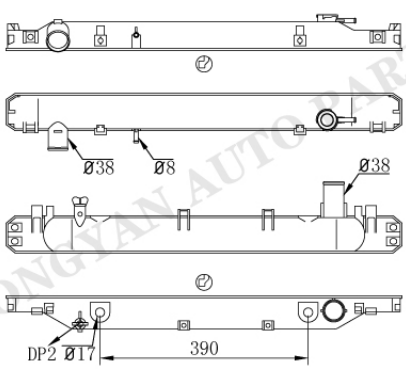

TO-0011AT/MT

Tank size :(5×4.5×69.5×744)
OEM :
DPI :
NISSENS :
APPLICATION :
91-98 TOYOTA LAND CRUISER 4.0L

TO-0012

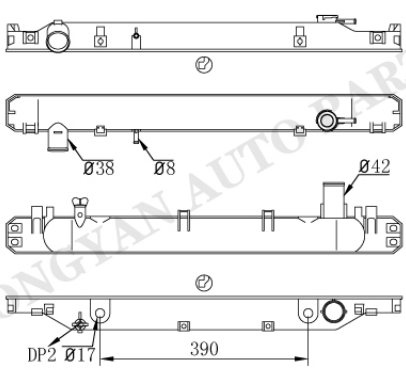

TO-0013AT/MT

Tank size :(5×4.5×69.5×744)
OEM :1640066040/30
DPI :
NISSENS :
APPLICATION :
91-98 TOYOTA LAND CRUISER 4.0L

HONGYAN AUTO PARTS

TOYOTA/LEXUS/HINO/SCION

TO-0012

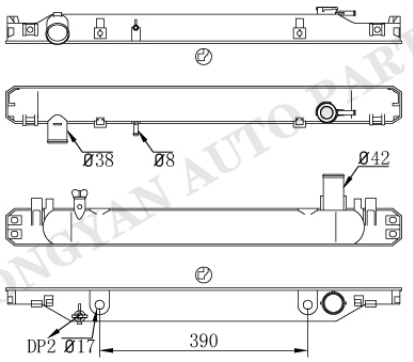

TO-0014AT/MT

Tank size :(5×4.5×69.5×744)
OEM :1640066050
DPI :1917
NISSENS :
APPLICATION :
93-97 TOYOTA LAND CRUISER 4.5L
96-97 LEXUS LX450 4.5L

TO-0015

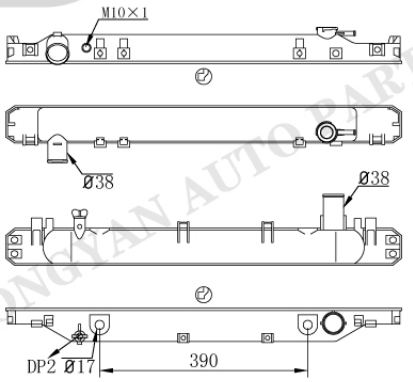

TO-0011AT/MT

Tank size :(5×4.5×69.5×744)
OEM :
DPI :
NISSENS :
APPLICATION :

TO-0015

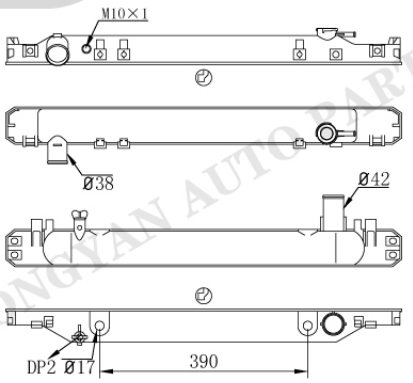

TO-0014AT/MT

Tank size :(5×4.5×69.5×744)
OEM :
DPI :
NISSENS :
APPLICATION :

TO-0016

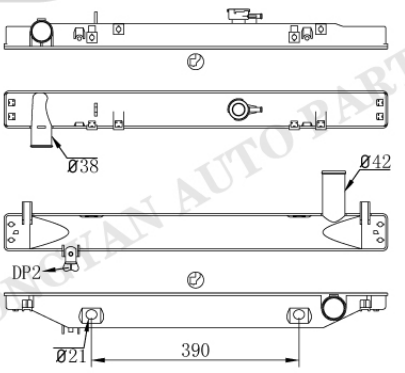

TO-0017AT/MT

Tank size :(R9×4×5×69.5×720.4)
OEM :
DPI :
NISSENS :
APPLICATION :

HONGYAN AUTO PARTS

TOYOTA/LEXUS/HINO/SCION

TO-0016

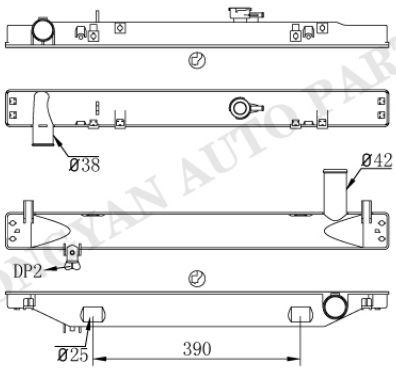

TO-0017-1AT

Tank size :(R9×4×5×69.5×720.4)
OEM :
DPI :
NISSENS :
APPLICATION :

TO-0016

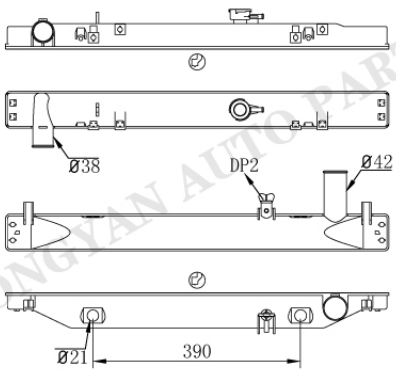

TO-0018AT/MT

Tank size :(R9×4×5×69.5×720.4)
OEM :1640050210
DPI :2282
NISSENS :
APPLICATION :
98-02 TOYOTA LAND CRUISER 4.7L
98-02 LEXUS LX470 4.7L

TO-0016

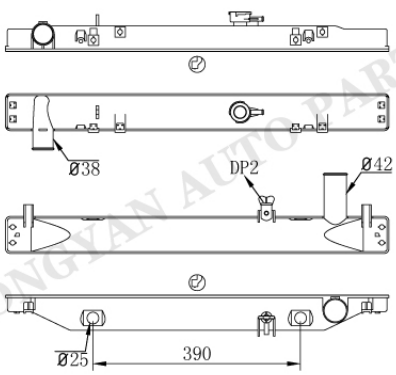

TO-0018-1AT

Tank size :(R9×4×5×69.5×720.4)
OEM :1640050210
DPI :
NISSENS :
APPLICATION :
98-02 TOYOTA LAND CRUISER 4.7L
98-02 LEXUS LX470 4.7L

TO-0019

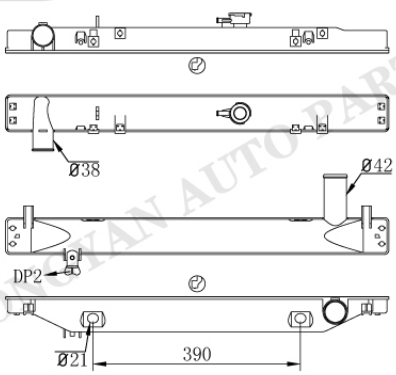

TO-0017AT/MT

Tank size :(R9×4×5×69.5×720.4)
OEM :1640017031/240/021
DPI :
NISSENS :
APPLICATION :

HONGYAN AUTO PARTS

TOYOTA/LEXUS/HINO/SCION

TO-0019

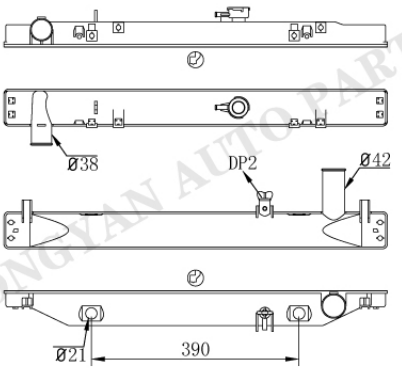

TO-0018AT/MT

Tank size :(R9×4×5×69.5×720.4)
OEM :1640066120/110
DPI :
NISSENS :
APPLICATION :

TO-0019

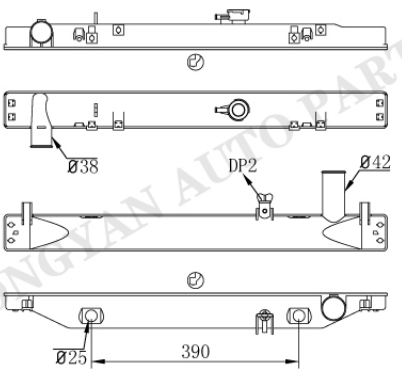

TO-0018-1AT

Tank size :(R9×4×5×69.5×720.4)
OEM :1640066120/110
DPI :
NISSENS :
APPLICATION :

TO-0019

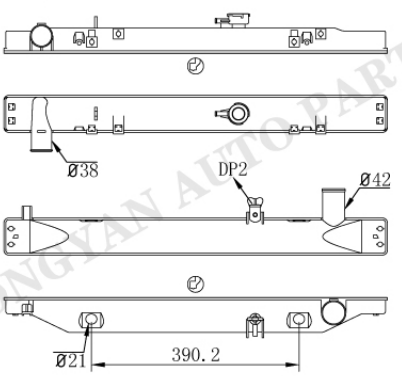

TO-0020AT/MT

Tank size :(R9×4×5×69.5×720.4)
OEM :
DPI :
NISSENS :
APPLICATION :

TO-0019

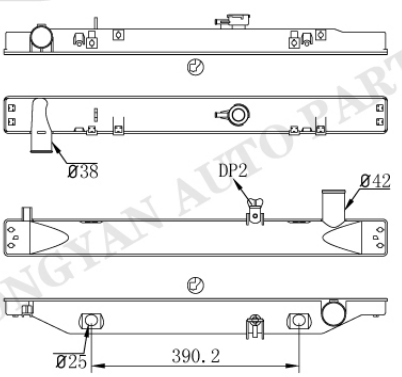

TO-0020-1AT

Tank size :(R9×4×5×69.5×720.4)
OEM :
DPI :
NISSENS :
APPLICATION :

HONGYAN AUTO PARTS

TOYOTA/LEXUS/HINO/SCION

TO-0021

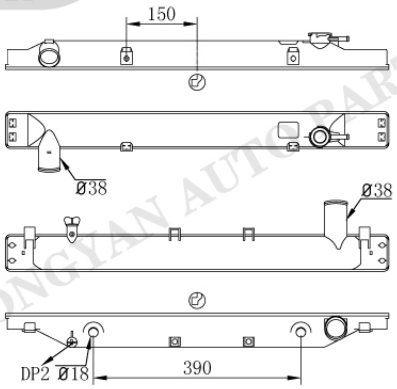

TO-0022AT/MT

Tank size :(R9×4×5×69.5×720.4)
OEM :
DPI :
NISSENS :
APPLICATION :

TO-0023

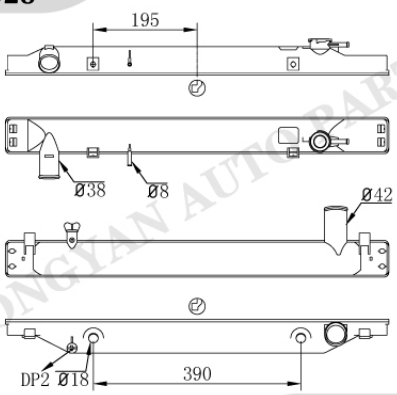

TO-0024AT/MT

Tank size :(R9×4×5×69.5×720.4)
OEM :1640066080/100/101
DPI :1918
NISSENS :
APPLICATION :
93-97 TOYOTA LAND CRUISER 4.5L
96-97 LEXUS LX450 4.5L

TO-0025

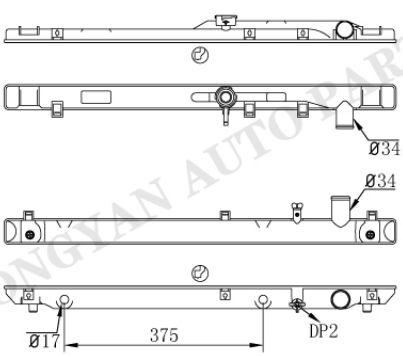

TO-0026AT/MT

Tank size :(R9×4×5×33/48×736)
OEM :
DPI :
NISSENS :
APPLICATION :
92-93 TOYOTA CAMRY 3.0L
92-93 LEXUS ES300 3.0L

TO-0027

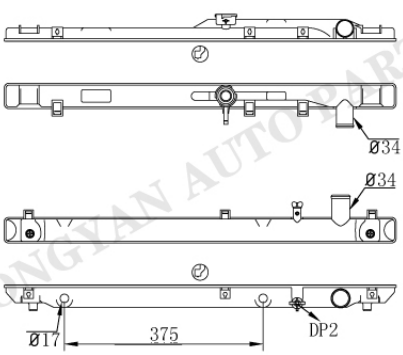

TO-0026AT/MT

Tank size :(R9×4×5×48×736)
OEM :1640062100/090
DPI :1303
NISSENS :
APPLICATION :
92-93 TOYOTA CAMRY 3.0L
92-93 LEXUS ES300 3.0L

TOYOTA/LEXUS/HINO/SCION

TO-0028

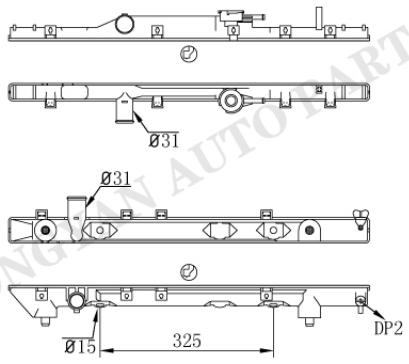

TO-0029AT/MT

Tank size :(R9×4×5×33/48×678.3)
OEM :1640016460/1/70/50
DPI :
NISSENS :
APPLICATION :
92-94 TOYOTA CORONA

TO-0028

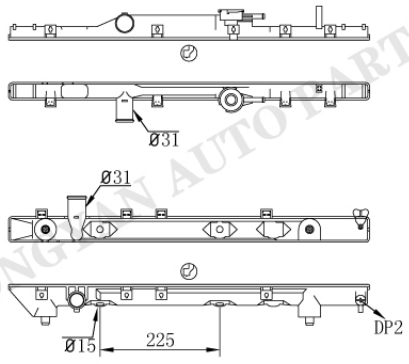

TO-0029-1AT

Tank size :(R9×4×5×33/48×678.3)
OEM :1640015590/02160/16470/80
DPI :
NISSENS :
APPLICATION :
92-94 TOYOTA CORONA

TO-0030

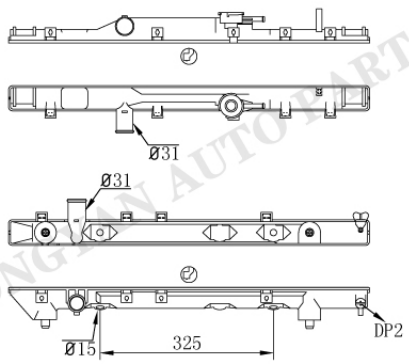

TO-0029AT/MT

Tank size :(R9×4×5×48×678.3)
OEM :1640011580/1/5570
DPI :
NISSENS :
APPLICATION :
92-94 TOYOTA CORONA

TO-0028

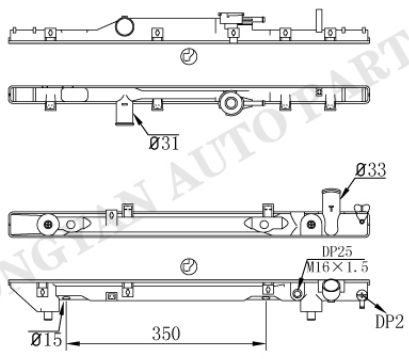

TO-0031AT/MT

Tank size :(R9×4×5×33/48×678.3)
OEM :1640074790/829/840/780
DPI :
NISSENS :
APPLICATION :
92-94 TOYOTA CORONA 1.8L

TOYOTA/LEXUS/HINO/SCION

TO-0030

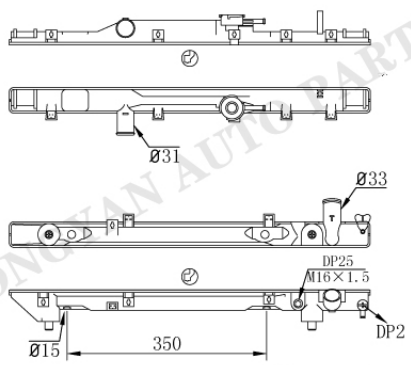

TO-0031AT/MT

Tank size :(R9×4×5×48×678.3)
OEM :1640074810/830/03090
DPI :
NISSENS :
APPLICATION :

TO-0032

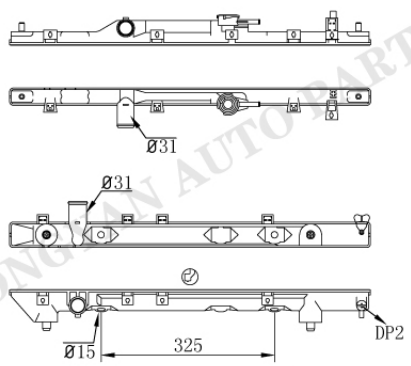

TO-0029AT/MT

Tank size :(R9×4×5×33/48×678.3)
OEM :164000D100/2280
DPI :
NISSENS :64781A 64782A
APPLICATION :
97-01 TOYOTA AVENSIS 1.8L

TO-0032

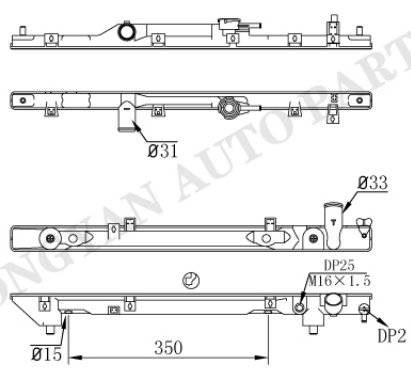

TO-0031AT/MT

Tank size :(R9×4×5×33/48×678.3)
OEM :1640003180
DPI :
NISSENS :64640A 64641A
APPLICATION :
97-01 TOYOTA AVENSIS 2.0L

TO-0033

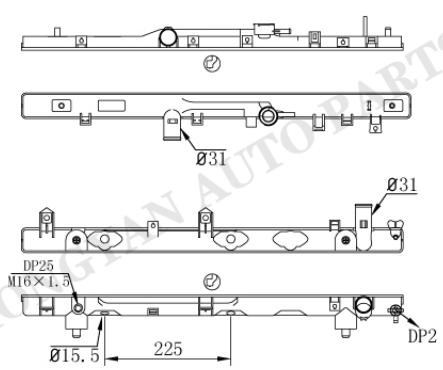

TO-0034AT/MT

Tank size :(R9×4×5×48×717)
OEM :164007A200/190/1
DPI :
NISSENS :
APPLICATION :
97- TOYOTA CORONA

TOYOTA/LEXUS/HINO/SCION

TO-0035

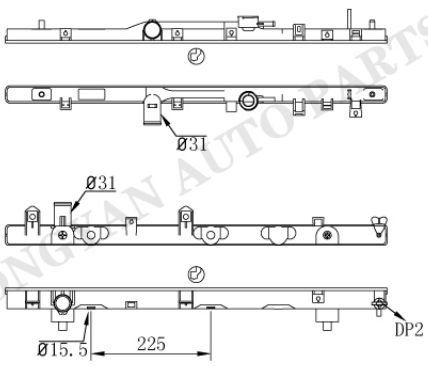

TO-0036AT/MT

Tank size :(R9×4×5×33/40×717)
OEM :1640016800/780
DPI :
NISSENS :
APPLICATION :

TO-0035

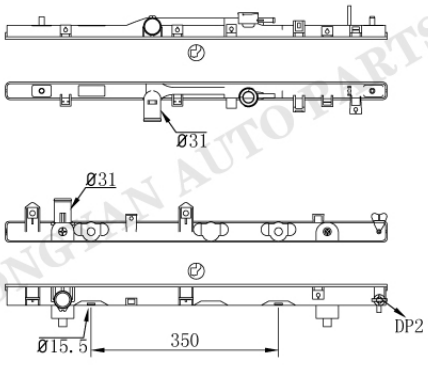

TO-0036-1AT

Tank size :(R9×4×5×33/40×717)
OEM :1640011780/1
DPI :
NISSENS :
APPLICATION :

TO-0035

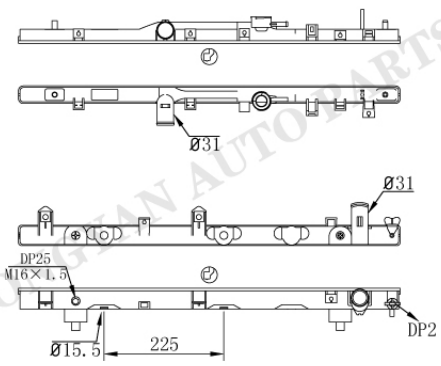

TO-0038-1AT

Tank size :(R9×4×5×33/40×717)
OEM :164007A190/191/200/201
DPI :
NISSENS :
APPLICATION :

TO-0037

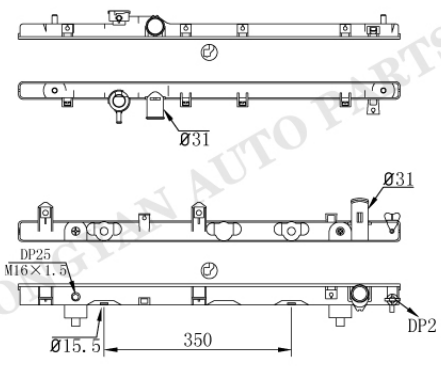

TO-0038AT/MT

Tank size :(R9×4×5×33/40×717)
OEM :164007A260/1/351
DPI :
NISSENS :64795A 64796A
APPLICATION :
96- TOYOTA IPSUM 2.0L
96- TOYOTA PICNIC 2.0L
96- TOYOTA SPORTS VAN 2.0L

HONGYAN AUTO PARTS

TOYOTA/LEXUS/HINO/SCION

TO-0039

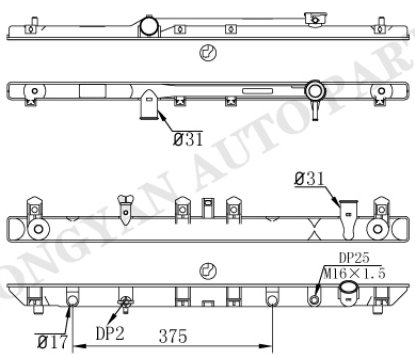

TO-0040AT/MT

Tank size :(R9×4×5×33/48×755)
OEM :164007A300/310/311/290
DPI :1909
NISSENS :
APPLICATION :
97-01 TOYOTA CAMRY 2.2L
99-01 TOYOTA SOLARA 2.2L

TO-0041

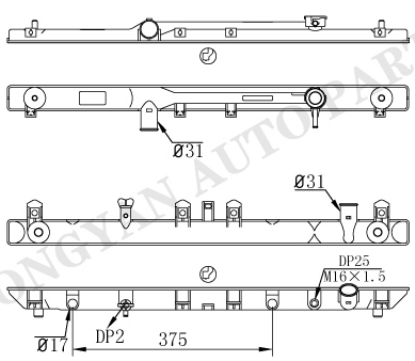

TO-0040AT/MT

Tank size :(R9×4×5×48×755)
OEM :1640003150/40
DPI :2005
NISSENS :
APPLICATION :
97-01 TOYOTA CAMRY 2.2L
99-01 TOYOTA SOLARA 2.2L

TO-0042

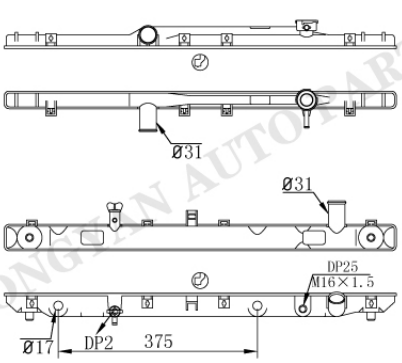

TO-0043AT/MT

Tank size :(R9×4×5×33/48×736)
OEM :1640074760/50/03061
DPI :1318
NISSENS :
APPLICATION :
92-96 TOYOTA CAMRY 2.2L

TO-0044

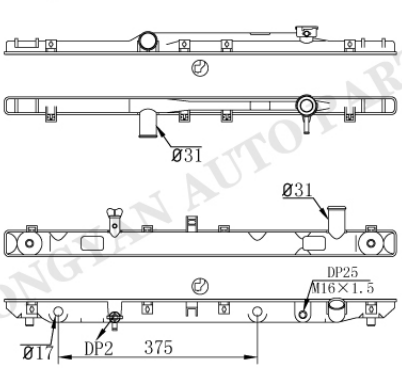

TO-0043AT/MT

Tank size :(R9×4×5×48×736)
OEM :1640003060/50
DPI :1428
NISSENS :
APPLICATION :
92-96 TOYOTA CAMRY 2.2L

TO-10

TOYOTA/LEXUS/HINO/SCION

TO-0045

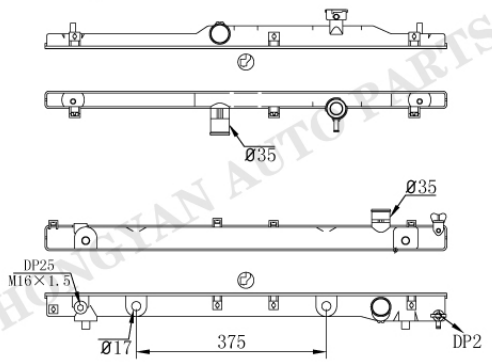

TO-0046AT/MT

Tank size :(R9×4×5×33/48×755)
OEM :1640028100
DPI :
NISSENS :
APPLICATION :

TO-0047

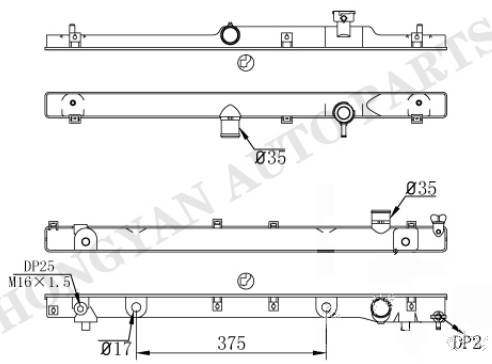

TO-0046AT/MT

Tank size :(R9×4×5×48×755)
OEM :1640023100
DPI :
NISSENS :
APPLICATION :

TO-0048

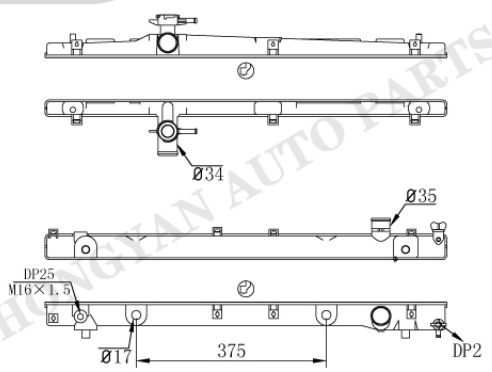

TO-0046AT/MT

Tank size :(R9×4×5×33/48×755)
OEM :
DPI :
NISSENS :
APPLICATION :

TO-0049

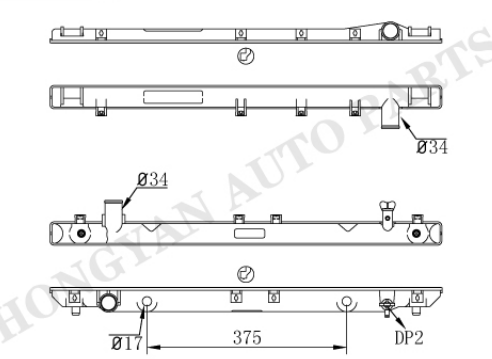

TO-0050AT/MT

Tank size :(R9×4×5×48×736)
OEM :1640020040/50/60
DPI :1746
NISSENS :
APPLICATION :
95-96 TOYOTA CAMRY 3.0L
95-97 TOYOTA AVALON 3.0L
94-96 LEXUS ES300 3.0L

HONGYAN AUTO PARTS

TOYOTA/LEXUS/HINO/SCION

TO-0051

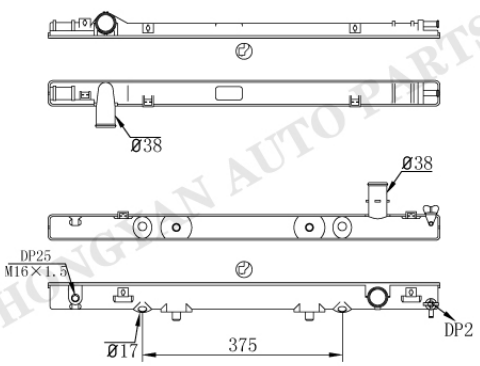

TO-0052AT/MT

Tank size :(R9×4×5×48×736)
OEM :
DPI :
NISSENS :
APPLICATION :
95-98 LEXUS LS400 4.0L

TO-0053

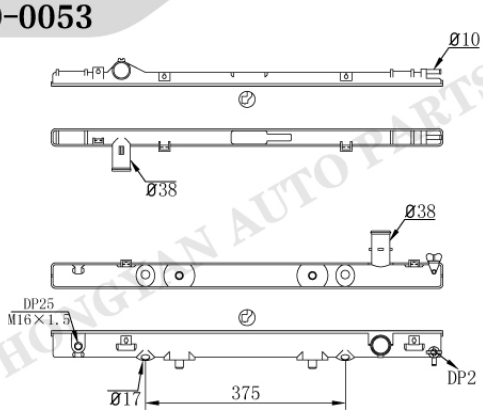

TO-0052AT/MT

Tank size :(R9×4×5×33/48×736)
OEM :1640050130
DPI :2058
NISSENS :
APPLICATION :
95-00 LEXUS LS400 4.0L

TO-0054

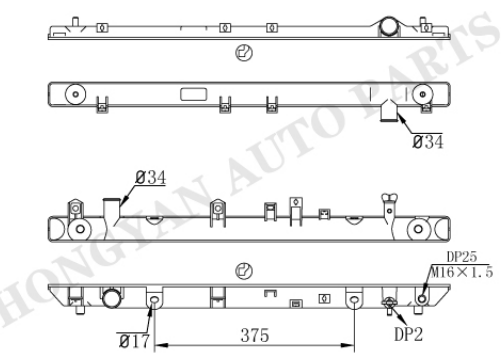

TO-0055AT/MT

Tank size :(R9×4×4.5×48×755)
OEM :164000A200/050/20090
DPI :1910 2004 2299
NISSENS :647541
APPLICATION :
97-01 LEXUS ES300 3.0L
97-01 TOYOTA CAMRY 3.0L
99-01 TOYOTA SOLARA 3.0L

TO-0054

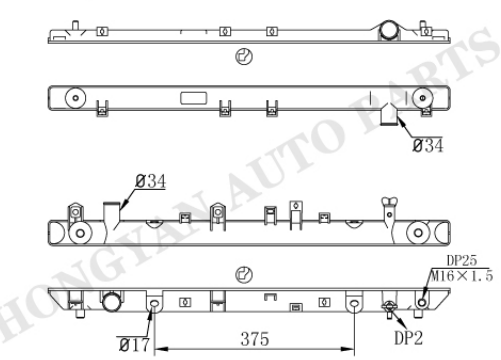

TO-0056AT/MT

Tank size :(R9×4×4.5×48×755)
OEM :
DPI :
NISSENS :
APPLICATION :
97-01 LEXUS ES300 3.0L
97-01 TOYOTA CAMRY 3.0L
99-01 TOYOTA SOLARA 3.0L

HONGYAN AUTO PARTS

TOYOTA/LEXUS/HINO/SCION

TO-0057

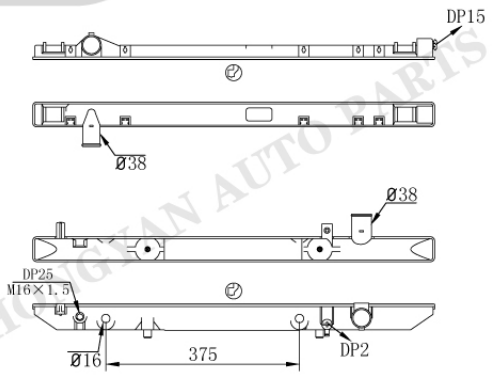

TO-0058AT/MT

Tank size :(R9×4×4.5×48×755)
OEM :1640050020/21/190
DPI :1304
NISSENS :
APPLICATION :
90-94 LEXUS LS400 4.0L

TO-0059

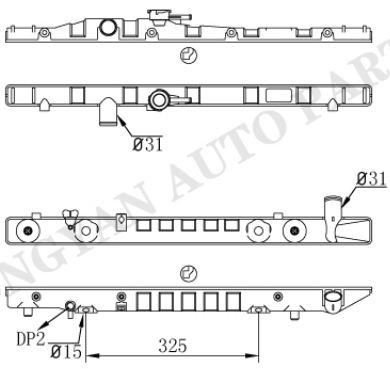

TO-0060AT/MT

Tank size :(R9.5×5×5×40/50×687.3)
OEM :1640074320/340
DPI :
NISSENS :
APPLICATION :
86-89 TOYOTA CELICA 2.0L

TO-0061

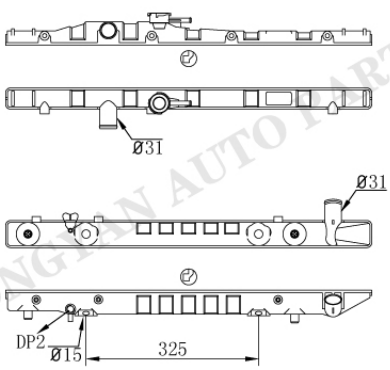

TO-0060-1AT/MT

Tank size :(R9.5×5×5×40/50×687.3)
OEM :1640074060/70/350
DPI :836 529
NISSENS :
APPLICATION :
86-89 TOYOTA CELICA 2.0L
74-78 DODGE RAMCHARGER 6.6/7.2L

TO-0062

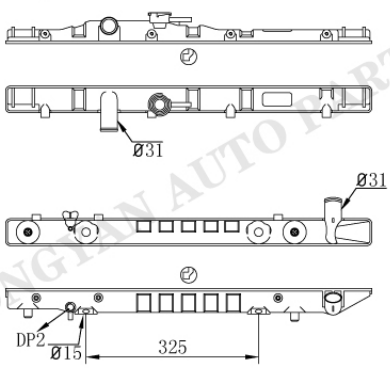

TO-0060-1AT/MT

Tank size :(R9.5×5×5×50×687.3)
OEM :1640074070
DPI :
NISSENS :
APPLICATION :
86-89 TOYOTA CELICA 2.0L

TOYOTA/LEXUS/HINO/SCION

TO-0063

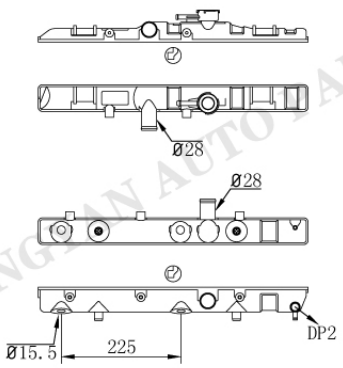

TO-0064AT/MT

Tank size :(R8×5×5×50×507)
OEM :1640011120
DPI :109
NISSENS :
APPLICATION :
87-88 TOYOTA TERCEL 1.5L

TO-0065

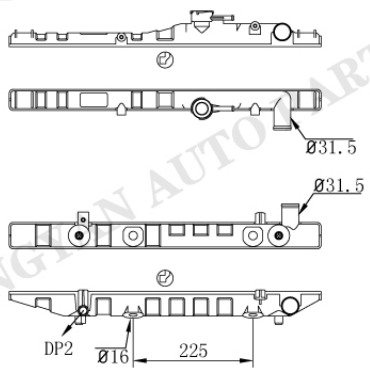

TO-0066AT/MT

Tank size :(R8×5×5×40/50×586)
OEM :1640015200/31
DPI :157 747 1250
NISSENS :
APPLICATION :
84-87 TOYOTA COROLLA 1.6L

TO-0067

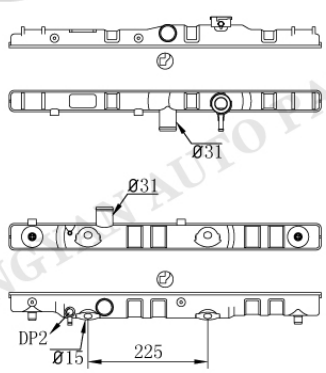

TO-0068AT/MT

Tank size :(R9.5×5×4.5×40/50×586.5)
OEM :1640011170
DPI :64741
NISSENS :
APPLICATION :
83- TOYOTA CARINA 1.6L
87- TOYOTA COROLLA 1.6L

TO-0069

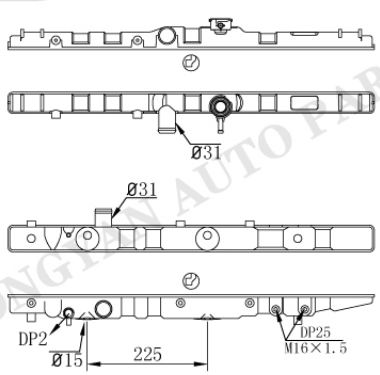

TO-0070AT/MT

Tank size :(R9.5×5×5×40/50×687.3)
OEM :1640011210/5380/5431
DPI :537 1435
NISSENS :
APPLICATION :
90-92 TOYOTA COROLLA 1.6

TO-14

TOYOTA/LEXUS/HINO/SCION

TO-0071

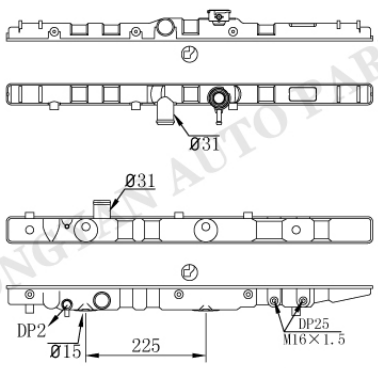

TO-0070AT/MT

Tank size :(R9.5×5×5×40/50×687.3)
OEM :1640011210/5380/5431
DPI :
NISSENS :
APPLICATION :
90-92 TOYOTA COROLLA 1.6

TO-0072

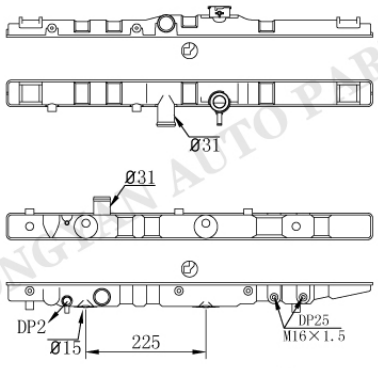

TO-0070AT/MT

Tank size :(R9.5×5×5×50×687.3)
OEM :1640001010/70/80
DPI :539 534
NISSENS :
APPLICATION :
88-92 TOYOTA COROLLA 1.6

TO-0073

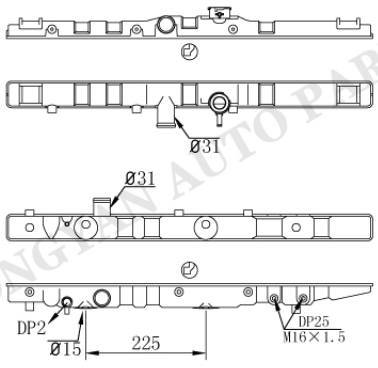

TO-0070AT/MT

Tank size :(R9.5×5×5×50×687.3)
OEM :
DPI :
NISSENS :
APPLICATION :
88-92 TOYOTA COROLLA 1.6

TO-0069

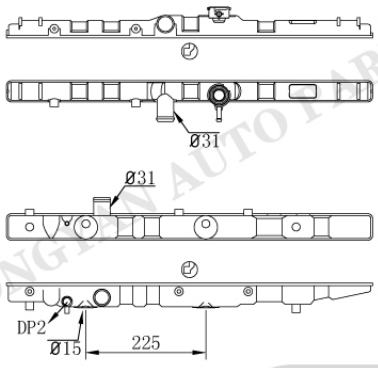

TO-0074AT/MT

Tank size :(R9.5×5×5×40/50×687.3)
OEM :1640015380/6200
DPI :
NISSENS :
APPLICATION :
88-92 TOYOTA COROLLA 1.6

HONGFAN AUTO PARTS

TOYOTA/LEXUS/HINO/SCION

TO-0072

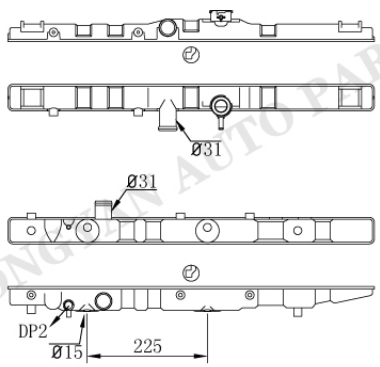

TO-0074AT/MT

Tank size :(R9.5×5×5×50×687.3)
OEM :
DPI :
NISSENS :
APPLICATION :

TO-0075

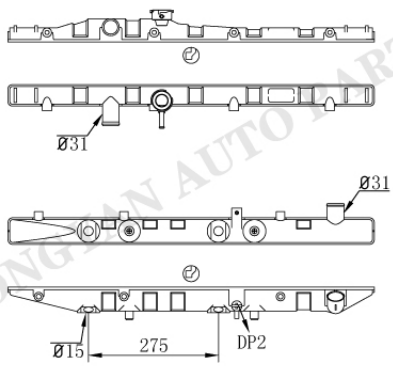

TO-0076AT/MT

Tank size :(R9.5×5×5×40/50×687.3)
OEM :1640074130/20
DPI :870
NISSENS :
APPLICATION :
87-91 TOYOTA CAMRY 2.0L

TO-0075

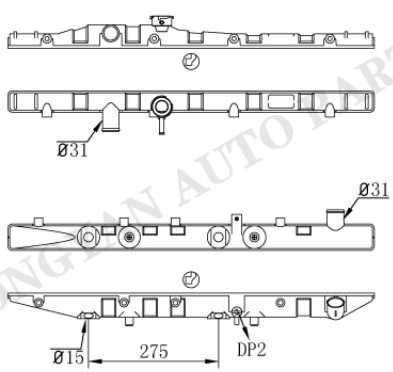

TO-0077AT/MT

Tank size :(R9.5×5×5×40/50×687.3)
OEM :1640074200/400
DPI :1260
NISSENS :
APPLICATION :
87-91 TOYOTA CAMRY 2.0L

TO-0078

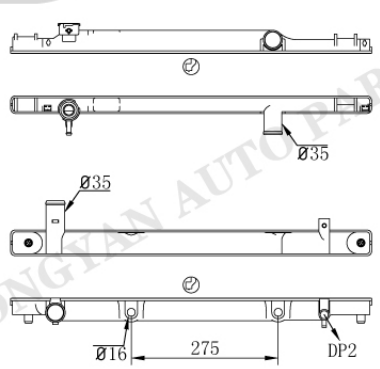

TO-0079AT/MT

Tank size :(R9×4×5×33/48×678.3)
OEM :1640073530/20
DPI :
NISSENS :
APPLICATION :

HONGYAN AUTO PARTS

TO-16

TOYOTA/LEXUS/HINO/SCION

TO-0080

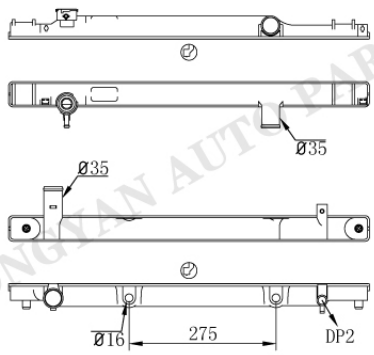

TO-0079AT/MT

Tank size :(R9×4×5×48×678.3)
OEM :
DPI :
NISSENS :
APPLICATION :

TO-0081

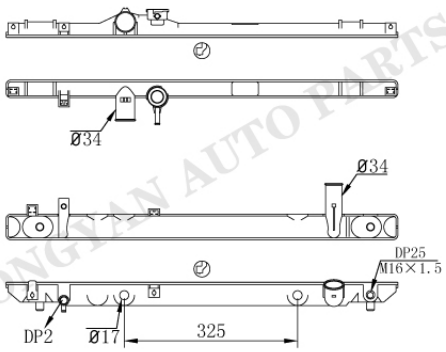

TO-0082AT/MT

Tank size :(R9×4×5×33/48×736)
OEM :1640046361/660/500
DPI :
NISSENS :
APPLICATION :
98-00 TOYOTA CROWN
96-98 TOYOTA CRESSIDA
96-98 LEXUS GX
06-11 LEXUS GS300/350

TO-0083

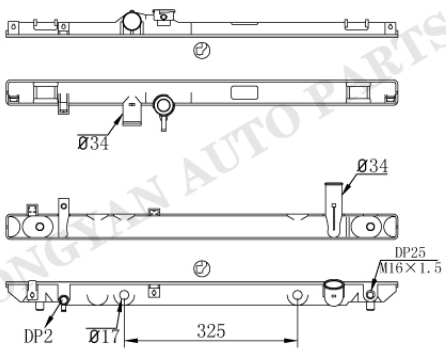

TO-0082AT/MT

Tank size :(R9×4×5×48×736)
OEM :
DPI :
NISSENS :
APPLICATION :
98-00 TOYOTA CROWN
96-98 TOYOTA CRESSIDA

TO-0084

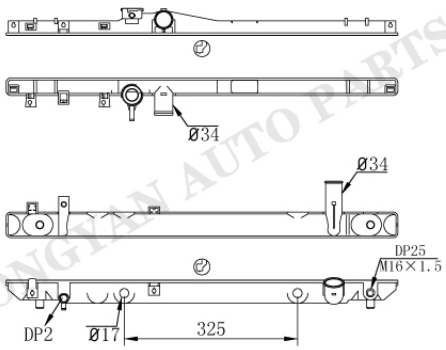

TO-0082AT/MT

Tank size :(R9×4×5×33/48×736)
OEM :1640070490/500/10
DPI :
NISSENS :
APPLICATION :
92-94 TOYOTA CRESSIDA

HONGYAN AUTO PARTS

TOYOTA/LEXUS/HINO/SCION

TO-0084

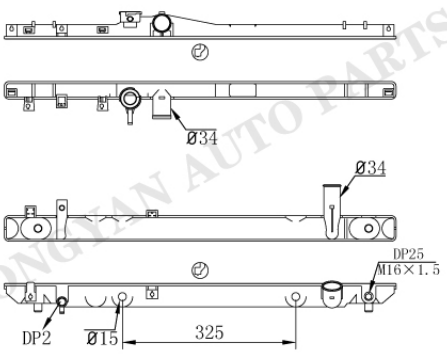

TO-0082-1AT

Tank size :(R9×4×5×33/48×678.3)
OEM :1640070490/500/10
DPI :
NISSENS :
APPLICATION :
92-94 TOYOTA CRESSIDA

TO-0085

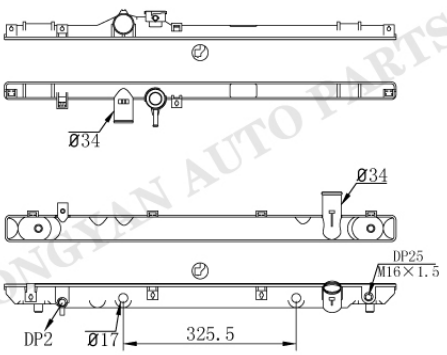

TO-0086AT/MT

Tank size :(R9×4×5×48×736)
OEM :1640046730
DPI :2536
NISSENS :
APPLICATION :
02-05 LEXUS IS300 3.0L

TO-0085

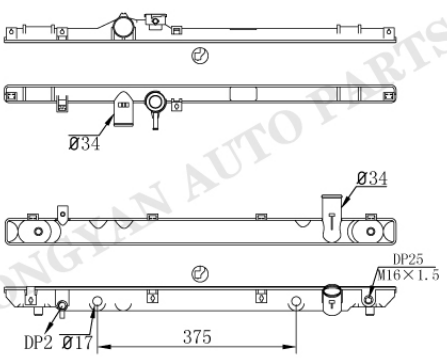

TO-0086-1AT

Tank size :(R9×4×5×48×736)
OEM :
DPI :
NISSENS :
APPLICATION :
02-05 LEXUS IS300 3.0L

TO-0085

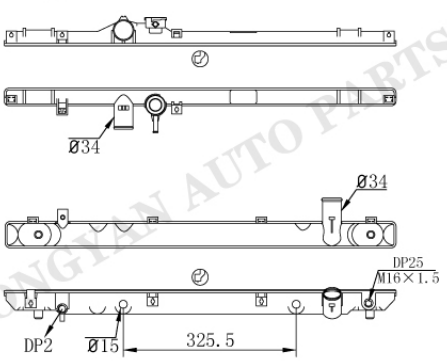

TO-0086-2AT

Tank size :(R9×4×5×48×736)
OEM :
DPI :
NISSENS :
APPLICATION :
02-05 LEXUS IS300 3.0L

HONGYAN AUTO PARTS

TOYOTA/LEXUS/HINO/SCION

TO-0087

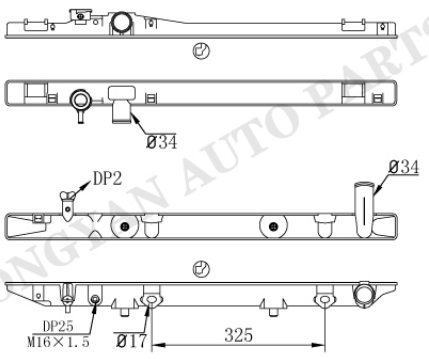

TO-0088AT/MT

Tank size :(R9×4×5×48×736)
OEM :1640046040
DPI :
NISSENS :
APPLICATION :

TO-0089

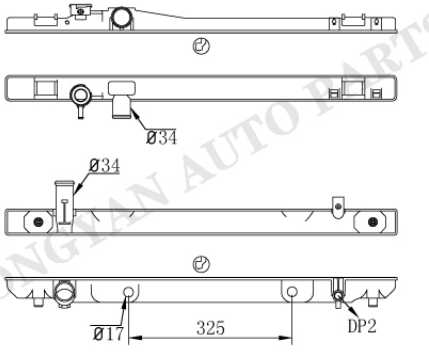

TO-0090AT/MT

Tank size :(R9×4×5×48×736)
OEM :164005B400
DPI :
NISSENS :
APPLICATION :

TO-0091

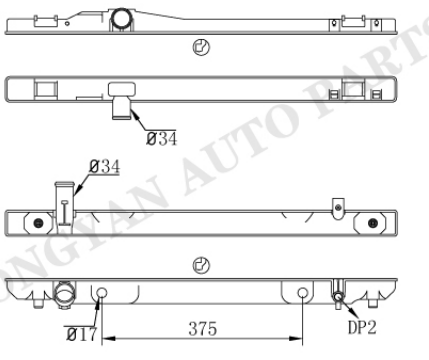

TO-0090-1AT

Tank size :(R9×4×5×48×736)
OEM :164005B090
DPI :
NISSENS :
APPLICATION :

TO-0092

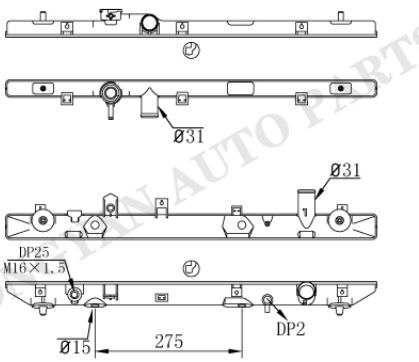

TO-0093AT/MT

Tank size :(R8.5×4×5×33/48×697.5)
OEM :164007A140/30
DPI :
NISSENS :
APPLICATION :
92-94 TOYOTA CAMRY

HONGTIAN AUTO PARTS

TOYOTA/LEXUS/HINO/SCION

TO-0094

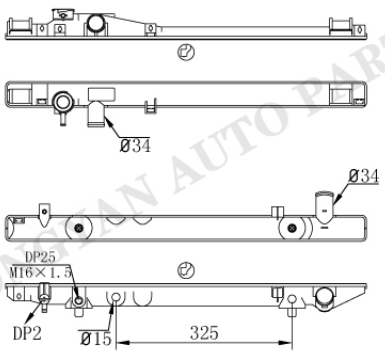

TO-0095AT/MT

Tank size :(R9×4×5×48×678.3)
OEM :1640046150/60
DPI :
NISSENS :
APPLICATION :

TO-0096

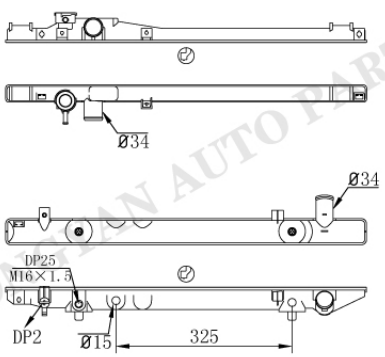

TO-0095AT/MT

Tank size :(R9×4×5×33/48×678.3)
OEM :
DPI :
NISSENS :
APPLICATION :

TO-0097

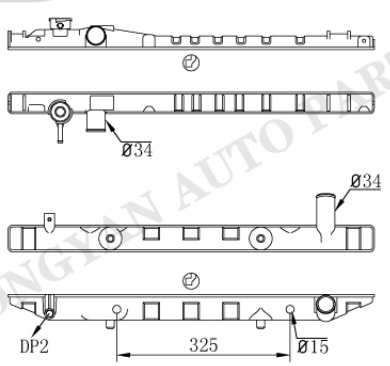

TO-0098AT/MT

Tank size :(R9.5×5×5×50×687.3)
OEM :1640070100/10/20/30
DPI :939 508 1947
NISSENS :
APPLICATION :
85-88 TOYOTA CRESSIDA 2.8L

TO-0099

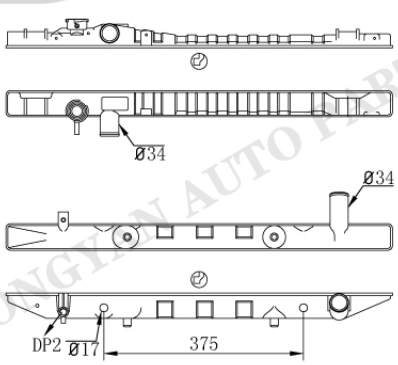

TO-0100AT/MT

Tank size :(R9.5×5×5×50×726)
OEM :1640070341/3041
DPI :178 1939
NISSENS :
APPLICATION :
89-02 TOYOTA CRESSIDA 3.0L

HONGYAN AUTO PARTS

TOYOTA/LEXUS/HINO/SCION

TO-0099

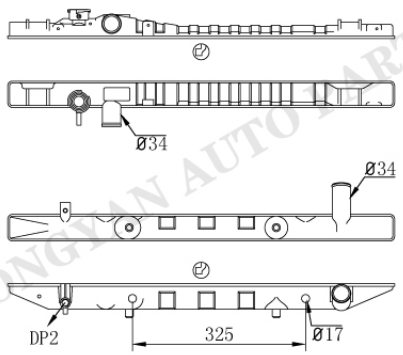

TO-0100-1AT

Tank size :(R9.5×5×5×50×726)
OEM :1640070341/3041
DPI :
NISSENS :
APPLICATION :
89-02 TOYOTA CRESSIDA 3.0L

TO-0101

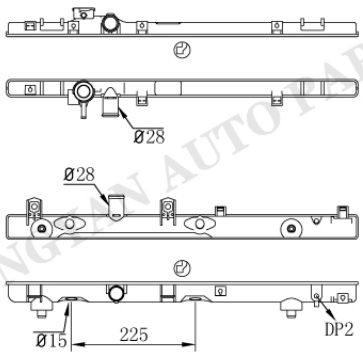

TO-0102AT/MT

Tank size :(R9×4×5×33/46×660)
OEM :1640011640/820
DPI :1758
NISSENS :
APPLICATION :
96-99 TOYOTA PASEO 1.5L
97-99 TOYOTA TERCEL 1.5L

TO-0103

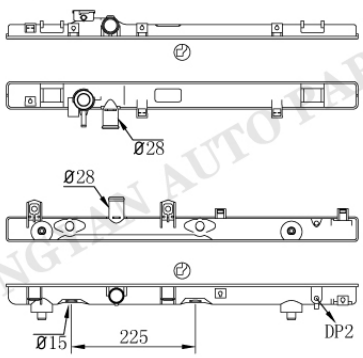

TO-0102AT/MT

Tank size :(R9×4×5×48/46×660)
OEM :1640011650/720
DPI :1750
NISSENS :
APPLICATION :
96-99 TOYOTA PASEO 1.5L
97-99 TOYOTA TERCEL 1.5L

TO-0104

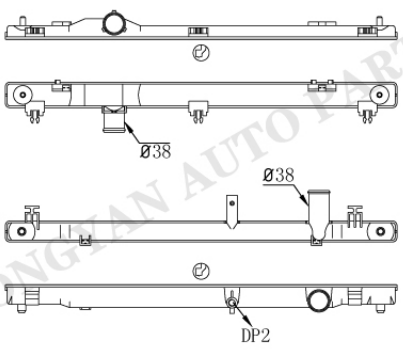

TO-0105

Tank size :(R9×4×5×48/40×736)
OEM :1640031370
DPI :2782
NISSENS :
APPLICATION :
07-11 LEXUS GS350 3.5L

HONGYAN AUTO PARTS

TOYOTA/LEXUS/HINO/SCION

TO-0106

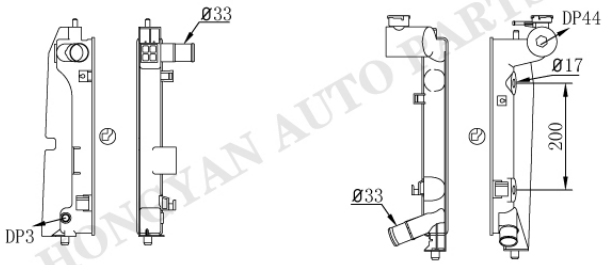

TO-0107AT/MT

Tank size :(R9×4×4.5×48×371)
OEM :
DPI :
NISSENS :
APPLICATION :
03-08 TOYOTA COROLLA 1.8L
03-08 TOYOTA MATRIX 1.8L
03-08 PONTIAC VIBE 1.8L

TO-0108

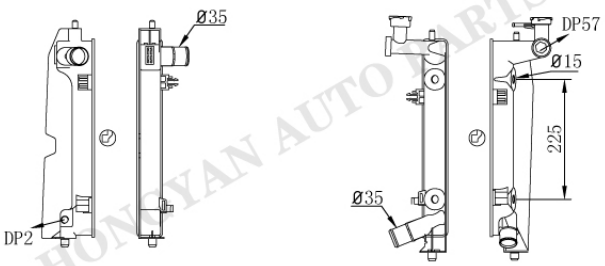

TO-0109AT/MT

Tank size :(R9×4×4.5×48×371)
OEM :164000D220
DPI :
NISSENS :64648A
APPLICATION :
01- TOYOTA COROLLA 1.3/1.6L
03- TOYOTA AVENSIS 1.8L

TO-0110

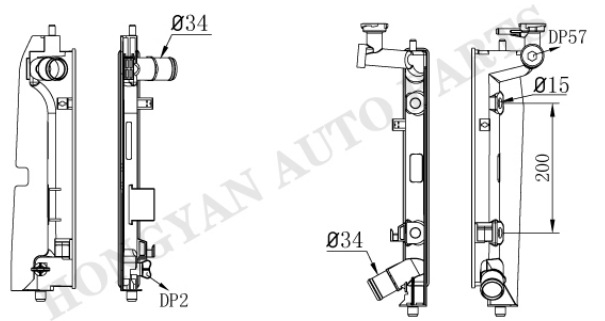

TO-0111AT/MT

Tank size :(R9×4×4.5×33/39.8×370)
OEM :1640021180/40
DPI :2428 2432
NISSENS :646321
APPLICATION :
03-08 TOYOTA COROLLA 1.8L
03-08 TOYOTA MATRIX 1.8L
03-08 PONTIAC VIBE 1.8L

TO-0112

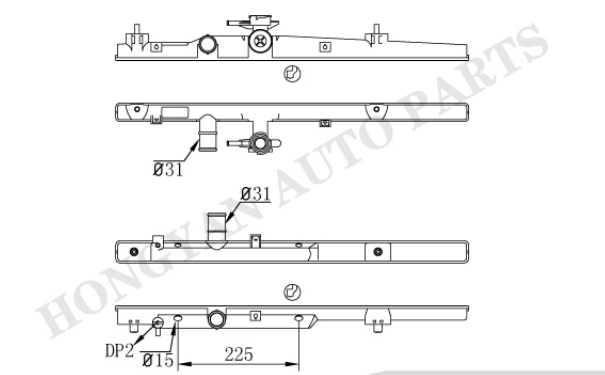

TO-0113AT/MT

Tank size :(R8×4×5×34.5/42×662.5)
OEM :1640002420/30
DPI :
NISSENS :
APPLICATION :
02- TOYOTA VIOS

HONGYAN AUTO PARTS

TOYOTA/LEXUS/HINO/SCION

TO-0114

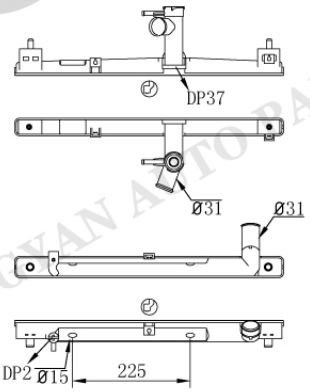

TO-0115AT/MT

Tank size :(R9×4×5×33/40×506)
OEM :164000M030/20
DPI :
NISSENS :
APPLICATION :
TOYOTA VIOS

TO-0116

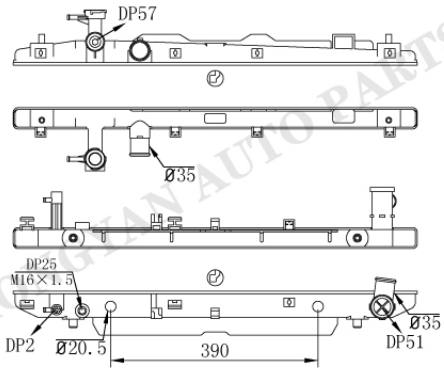

TO-0117AT/MT

Tank size :(R9×4.5×5×39.5×760)
OEM :1640028190/22/30
DPI :2403 2404
NISSENS :
APPLICATION :
01-05 TOYOTA RAV4 2.0/2.4L

TO-0116

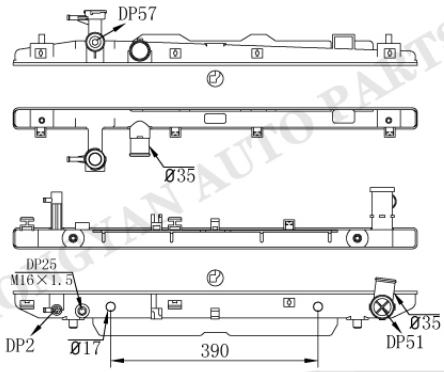

TO-0117-1AT

Tank size :(R9×4.5×5×39.5×760)
OEM :1640028190/22/30
DPI :
NISSENS :
APPLICATION :
01-05 TOYOTA RAV4 2.0/2.4L

TO-0116

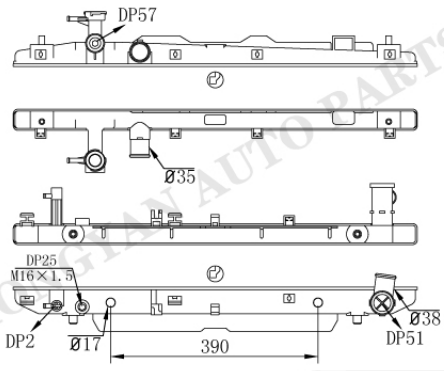

TO-0118AT/MT

Tank size :(R9×4.5×5×39.5×760)
OEM :
DPI :
NISSENS :
APPLICATION :
01-05 TOYOTA RAV4 2.0/2.4L

HONGYAN AUTO PARTS

TOYOTA/LEXUS/HINO/SCION

TO-0116

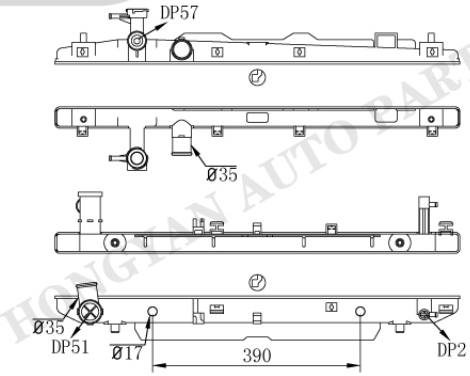

TO-0119AT/MT

Tank size :(R9×4.5×5×39.5×760)
OEM :
DPI :
NISSENS :
APPLICATION :
01-05 TOYOTA RAV4 2.0/2.4L

TO-0116

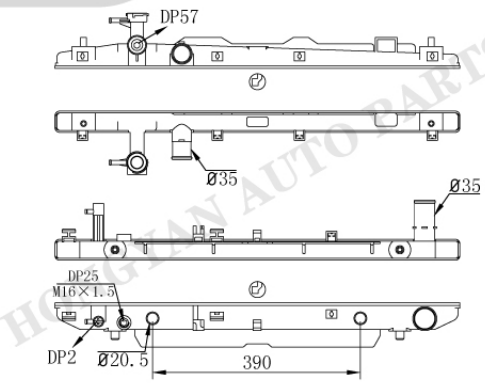

TO-0120AT/MT

Tank size :(R9×4.5×5×39.5×760)
OEM :
DPI :
NISSENS :646852
APPLICATION :
01-05 TOYOTA RAV4 1.8L

TO-0121

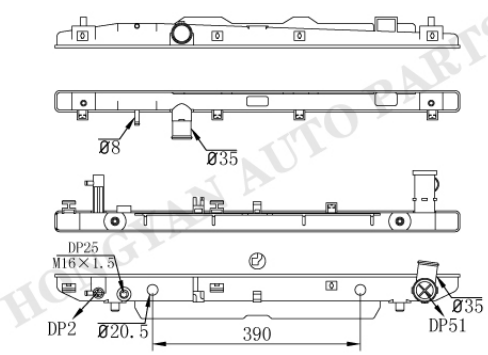

TO-0117AT/MT

Tank size :(R9×4.5×5×39.5×760)
OEM :
DPI :
NISSENS :
APPLICATION :

TO-0122

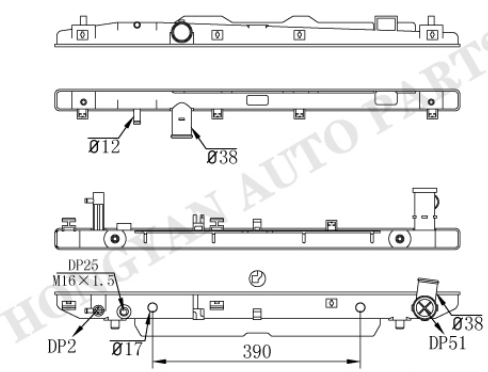

TO-0118AT/MT

Tank size :(R9×4.5×5×39.5×760)
OEM :1640027060/61
DPI :
NISSENS :64638A
APPLICATION :
01-05 TOYOTA RAV4 2.0L

HONGTIAN AUTO PARTS

TOYOTA/LEXUS/HINO/SCION

TO-0123

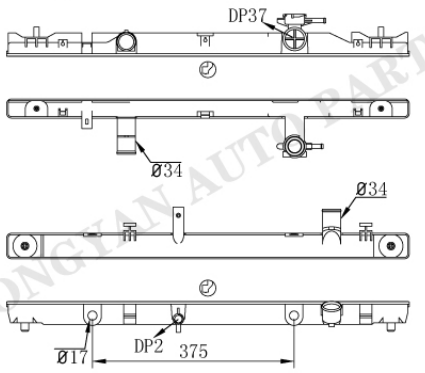

TO-0124AT/MT

Tank size :(R9×4×5×33/48×755)
OEM :1640028280/70
DPI :2437
NISSENS :646351
APPLICATION :
02-06 TOYOTA CAMRY 2.4L

TO-0125

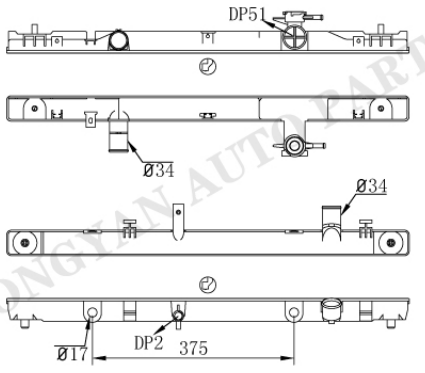

TO-0124AT/MT

Tank size :(R9×4×5×48×755)
OEM :1640020270
DPI :2436
NISSENS :
APPLICATION :
02-06 TOYOTA CAMRY 2.4L
04-08 TOYOTA SOLARA 2.4L

TO-0126

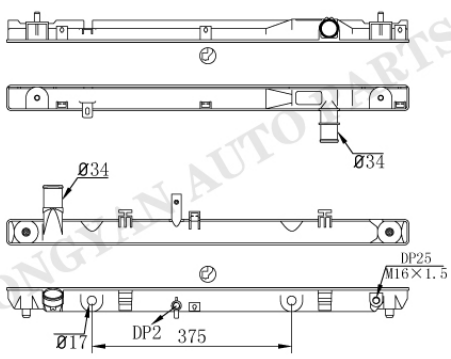

TO-0127AT/MT

Tank size :(R9×4×5×48×755)
OEM :164002270/0A240
DPI :2434 2435
NISSENS :
APPLICATION :
02-05 TOYOTA CAMRY 3.0L
02-08 TOYOTA SOLARA 3.0/3.3L
04-06 LEXUS ES330 3.3L

TO-0128

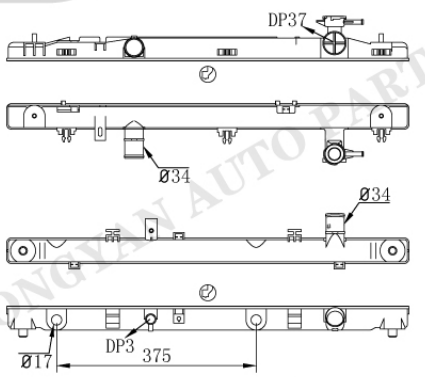

TO-0129AT/MT

Tank size :(R9×4×5×48×755)
OEM :164000H291
DPI :2917
NISSENS :
APPLICATION :
07-11 TOYOTA CAMRY 2.4/2.5L

HONGYAN AUTO PARTS

TOYOTA/LEXUS/HINO/SCION

TO-0130

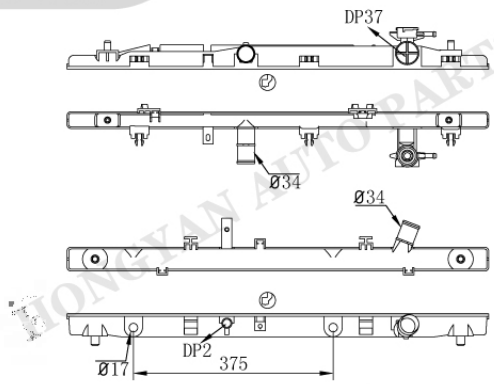

TO-0131AT/MT

Tank size :(R9×4×5×33/48×794)
OEM :1640031520/AD010/AD020
DPI :2817 2919
NISSENS :
APPLICATION :
05-12 TOYOTA AVALON 3.5L
07-11 TOYOTA CAMRY 2.4/3.5L
09-14 TOYOTA VENZA 3.5L
07-12 LEXUS ES350 3.5L

TO-0132

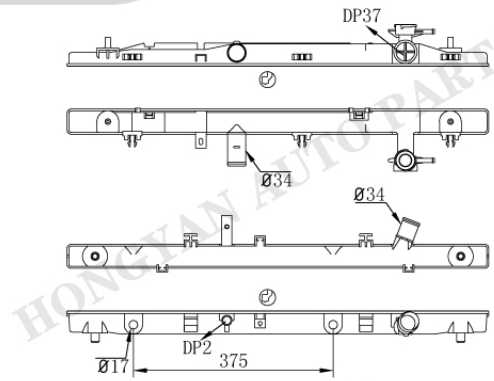

TO-0131AT/MT

Tank size :(R9×4×5×48×794)
OEM :1640031520
DPI :13035
NISSENS :
APPLICATION :
07-11 TOYOTA CAMRY 2.4/3.5L
09-14 TOYOTA VENZA 3.5L
07-12 LEXUS ES350 3.5L

TO-0133

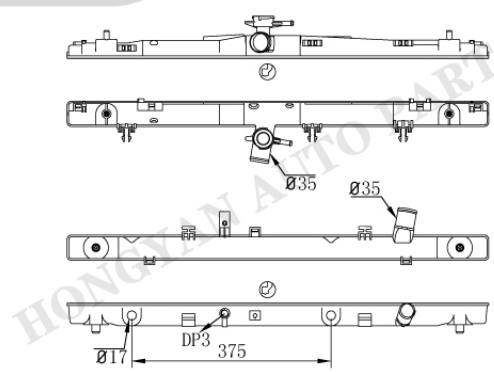

TO-0134AT/MT

Tank size :(R9×4×5×48×794)
OEM :164000P350 164000V120
DPI :13270 13269
NISSENS :646872
APPLICATION :
13-14 TOYOTA AVALON 2.5/3.5L
12-14 TOYOTA CAMRY 2.5/3.5L

TO-0135

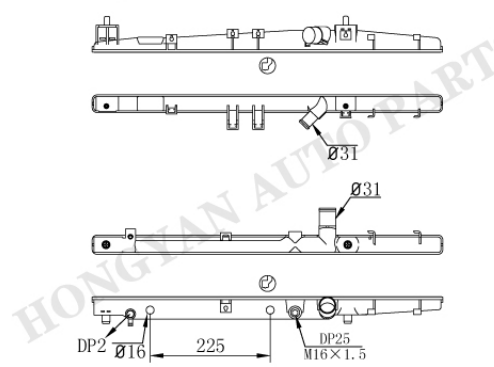

TO-0136AT/MT

Tank size :(R9×4×5×33/40×660)
OEM :1640021100/210
DPI :
NISSENS :
APPLICATION :

HONGYAN AUTO PARTS

TOYOTA/LEXUS/HINO/SCION

TO-0137

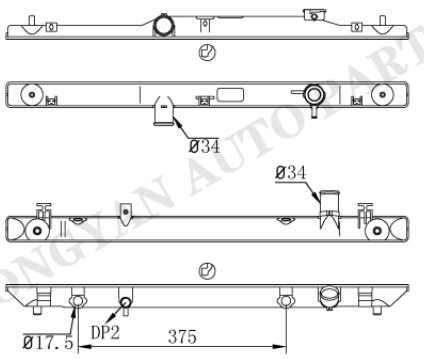

TO-0138AT/MT

Tank size :(R9×4×5×48×755)
OEM :1640001170/160
DPI :
NISSENS :
APPLICATION :

TO-0139

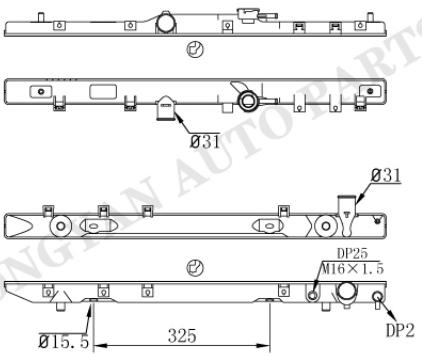

TO-0140AT/MT

Tank size :(R9×4×5×48×717)
OEM :1640064831/50/6A200
DPI :
NISSENS :64785A
APPLICATION :
97- TOYOTA AVENSIS 2.0L

TO-0139

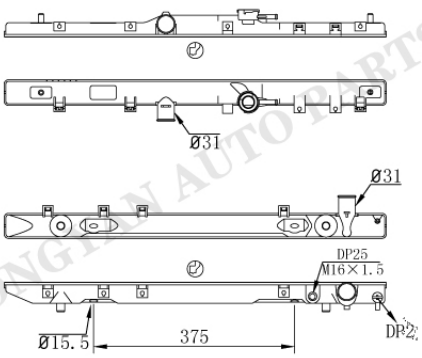

TO-0140-1AT

Tank size :(R9×4×5×48×717)
OEM :1640064831/50/6A200
DPI :
NISSENS :
APPLICATION :
97- TOYOTA AVENSIS 2.0L

TO-0141

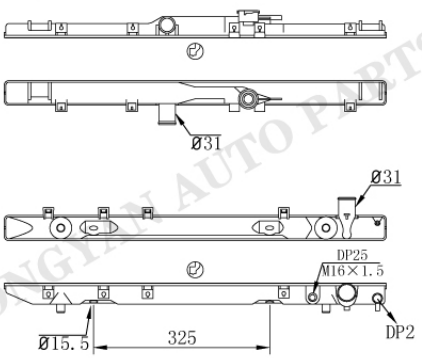

TO-0140AT/MT

Tank size :(R9×4×5×48×717)
OEM :164006474/31
DPI :
NISSENS :
APPLICATION :
97- TOYOTA AVENSIS 2.0L

TOYOTA/LEXUS/HINO/SCION

TO-0142

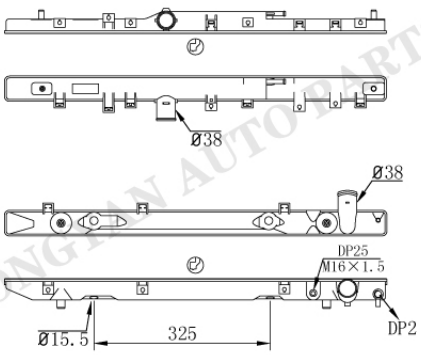

TO-0143AT/MT

Tank size :(R9×4×5×48×717)
OEM :164000G010
DPI :64643A
NISSENS :
APPLICATION :
97- TOYOTA AVENSIS 2.0L

TO-0144

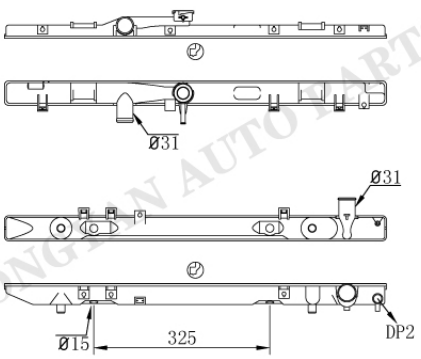

TO-0145AT/MT

Tank size :(R9×4×5×48×717)
OEM :1640074500/10
DPI :1174 1173 1437
NISSENS :
APPLICATION :
90-93 TOYOTA CELICA 2.2L

TO-0146

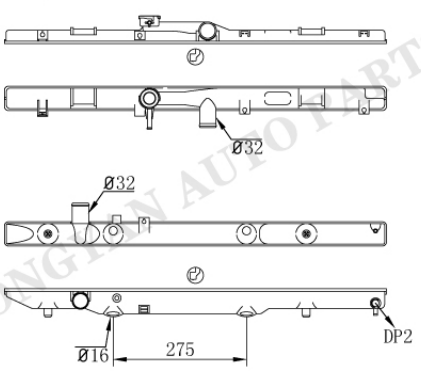

TO-0147AT/MT

Tank size :(R9×4×5×48×717)
OEM :1640016311
DPI :1407
NISSENS :
APPLICATION :
90-93 TOYOTA CELICA 1.6L

TO-0148

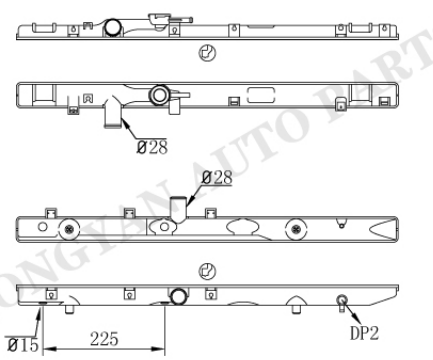

TO-0149AT/MT

Tank size :(R9×4×5×48×717)
OEM :1640011460/530
DPI :1319
NISSENS :
APPLICATION :
93-95 TOYOTA PASEO 1.5L
91-94 TOYOTA TERCEL 1.5L

HONGYAN AUTO PARTS

TOYOTA/LEXUS/HINO/SCION

TO-0148

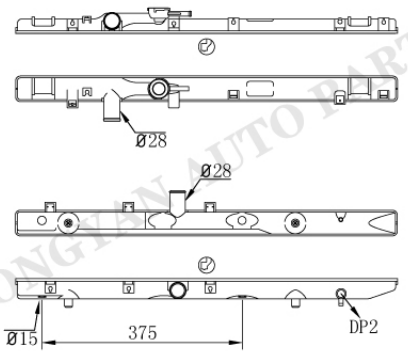

TO-0149-1AT

Tank size :(R9×4×5×48×717)
OEM :1640011460/530
DPI :1319
NISSENS :
APPLICATION :
93-95 TOYOTA PASEO 1.5L
91-94 TOYOTA TERCEL 1.5L

TO-0150

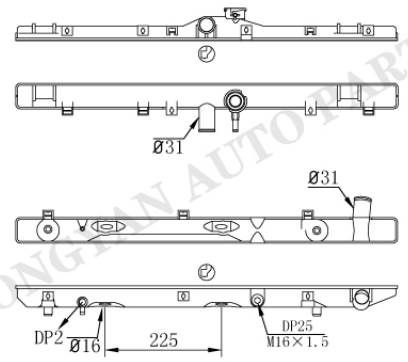

TO-0151AT/MT

Tank size :(R9×4×5×48×717)
OEM :1640064630/40/720
DPI :
NISSENS :
APPLICATION :
93-97 TOYOTA COROLLA CE110

TO-0152

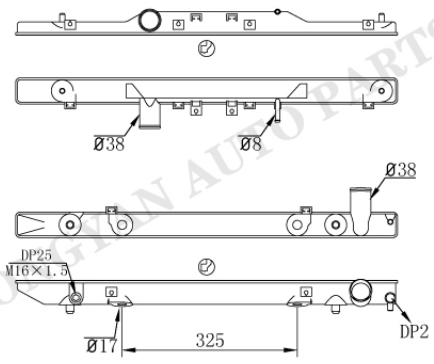

TO-0153AT/MT

Tank size :(R9×4×5×48×717)
OEM :164006A180/170
DPI :
NISSENS :64797A
APPLICATION :
96- TOYOTA IPSUM 2.2L
96- TOYOTA PICNIC 2.2L
96- TOYOTA SPORTS VAN 2.2L

TO-0154

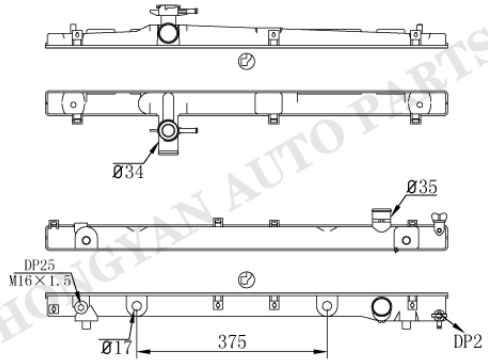

TO-0046AT/MT

Tank size :(R9×4×5×48×755)
OEM :164000P090
DPI :
NISSENS :64670A
APPLICATION :
07- TOYOTA NOAH
01- TOYOTA IPSUM 2.0/2.4L
01- TOYOTA AVEMISI 2.0/2.4L
01- TOYOTA PICNIC 2.0/2.4L

HONGYAN AUTO PARTS

TOYOTA/LEXUS/HINO/SCION

TO-0155

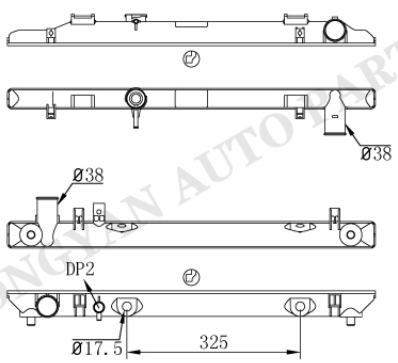

TO-0156AT/MT

Tank size :(R9×4.5×5×40/50×691)
OEM :164006A140/50/20
DPI :
NISSENS :
APPLICATION :
TOWNACE

TO-0157

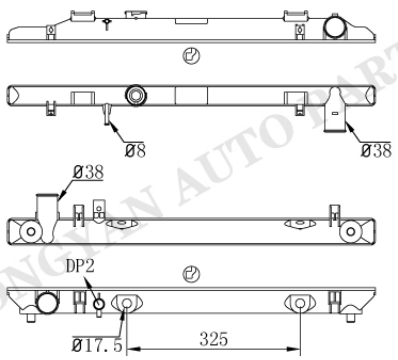

TO-0156AT/MT

Tank size :(R9×4.5×5×40/50×691)
OEM :164006A220
DPI :
NISSENS :
APPLICATION :
TOWNACE

TO-0158

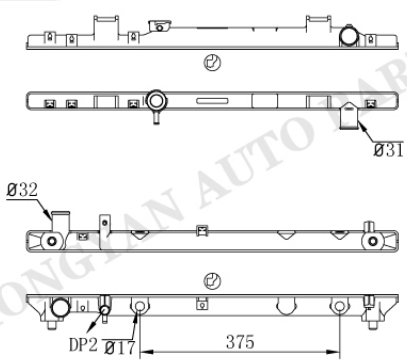

TO-0159AT/MT

Tank size :(R9×4×5×33/40×697.5)
OEM :164007A380/90/660
DPI :
NISSENS :
APPLICATION :
TOWNACE

TO-0158

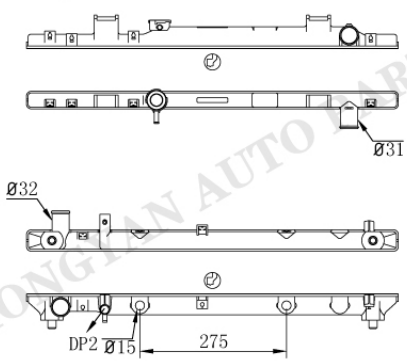

TO-0159-1AT

Tank size :(R9×4×5×33/40×697.5)
OEM :1640013600/10
DPI :
NISSENS :
APPLICATION :
TOWNACE

HONGYAN AUTO PARTS

TOYOTA/LEXUS/HINO/SCION

TO-0160

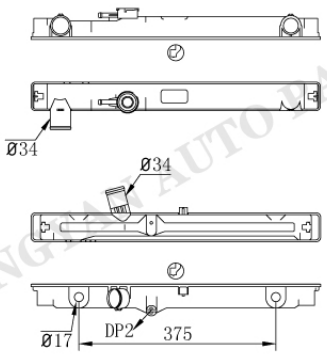

TO-0161AT/MT

Tank size :(R9×4×5×54.5×544)
OEM :164005B590
DPI :
NISSENS :
APPLICATION :
HILUX

TO-0160

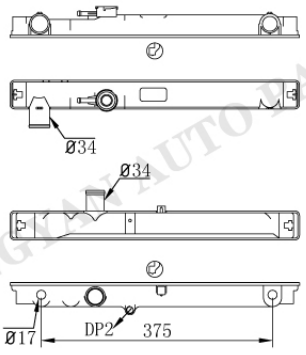

TO-0162AT/MT

Tank size :(R9×4×5×54.5×544)
OEM :
DPI :
NISSENS :
APPLICATION :
HILUX

TO-0163

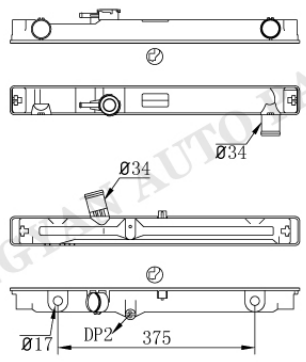

TO-0161AT/MT

Tank size :(R9×4×5×54.5×544)
OEM :
DPI :
NISSENS :
APPLICATION :
HILUX

TO-0163

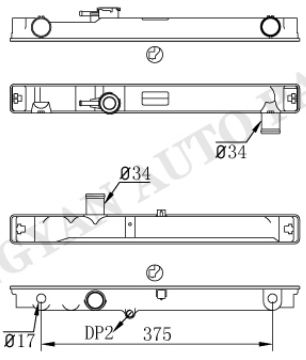

TO-0162AT/MT

Tank size :(R9×4×5×54.5×544)
OEM :
DPI :
NISSENS :
APPLICATION :
HILUX

TOYOTA/LEXUS/HINO/SCION

TO-0164

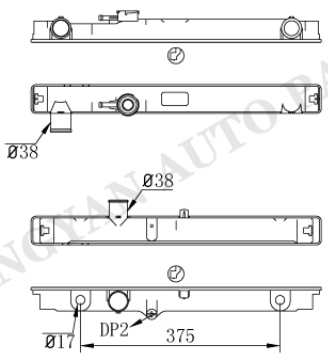

TO-0165AT/MT

Tank size :(R9×4×5×54.5×544)
OEM :
DPI :
NISSENS :
APPLICATION :
HILUX

TO-0164

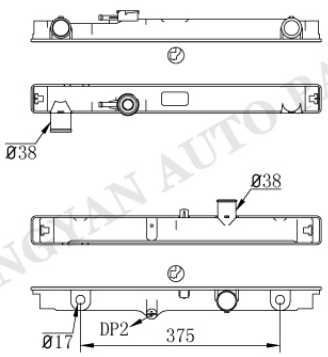

TO-0166AT/MT

Tank size :(R9×4×5×54.5×544)
OEM :1640030080
DPI :
NISSENS :
APPLICATION :
HILUX

TO-0164

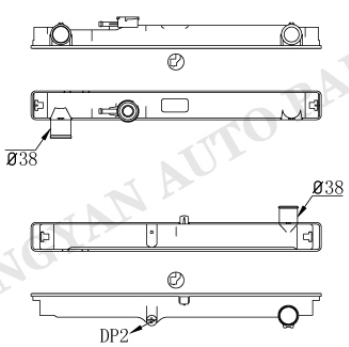

TO-0167

Tank size :(R9×4×5×54.5×544)
OEM :
DPI :
NISSENS :
APPLICATION :
HILUX

TO-0168

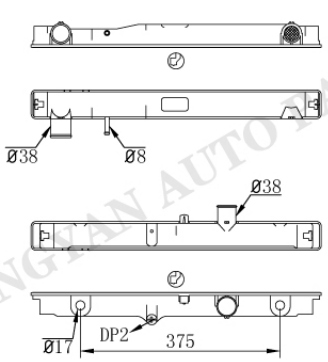

TO-0166AT/MT

Tank size :(R9×4×5×54.5×544)
OEM :164000L060
DPI :
NISSENS :
APPLICATION :
HILUX

HONGTAN AUTO PARTS

TOYOTA/LEXUS/HINO/SCION

TO-0169

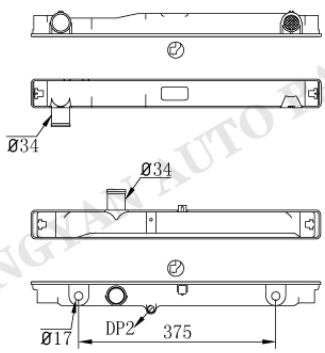

TO-0162AT/MT

Tank size :(R9×4×5×54.5×544)
OEM :164005B630
DPI :
NISSENS :
APPLICATION :
HILUX

TO-0170

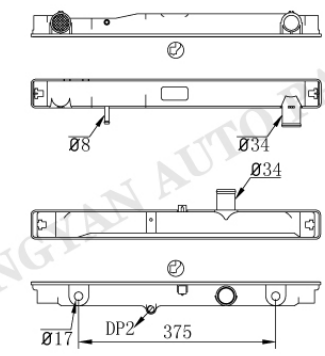

TO-0171AT/MT

Tank size :(R9×4×5×54.5×544)
OEM :
DPI :
NISSENS :
APPLICATION :
HILUX

TO-0172

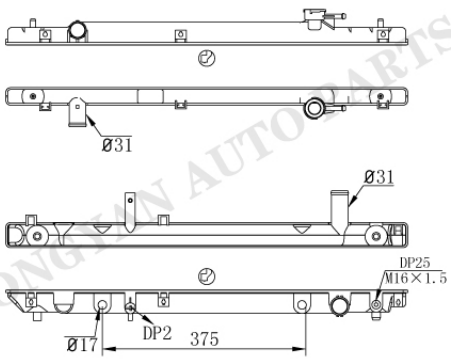

TO-0173AT/MT

Tank size :(R9×4×5×54.5×544)
OEM :
DPI :
NISSENS :
APPLICATION :
HILUX

TO-0174

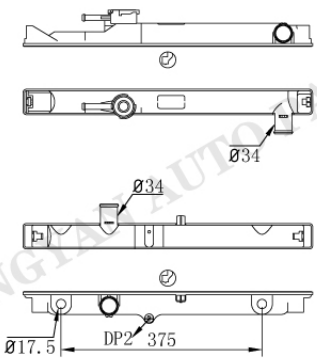

TO-0175AT/MT

Tank size :(R9×4×5×48×544)
OEM :1640075230/270/240
DPI :
NISSENS :
APPLICATION :

HONGTAN AUTO PARTS

TOYOTA/LEXUS/HINO/SCION

TO-0176

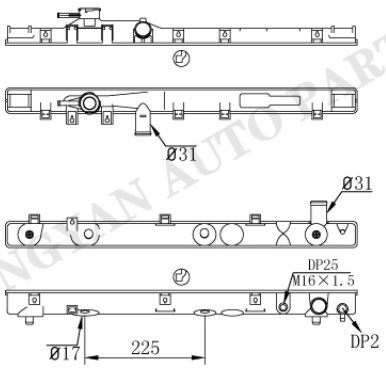

TO-0177AT/MT

Tank size :(R9×4×5×48×660)
OEM :164007A70
DPI :1575 1958
NISSENS :
APPLICATION :
94-99 TOYOTA CELICA 2.2L

TO-0176

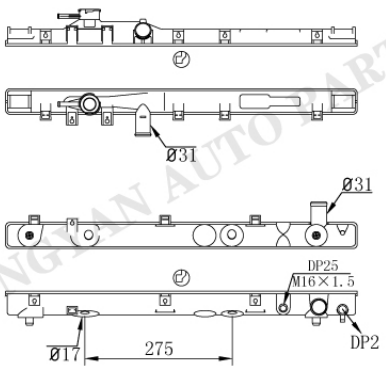

TO-0177-1AT

Tank size :(R9×4×5×48×660)
OEM :
DPI :
NISSENS :
APPLICATION :
94-99 TOYOTA CELICA 2.2L

TO-0178

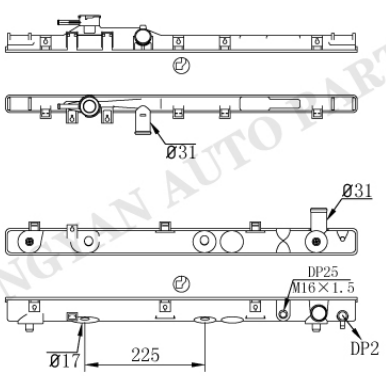

TO-0177AT/MT

Tank size :(R9×4×5×33/48×660)
OEM :164007A060
DPI :1748 1981
NISSENS :
APPLICATION :
94-99 TOYOTA CELICA 1.8L

TO-0178

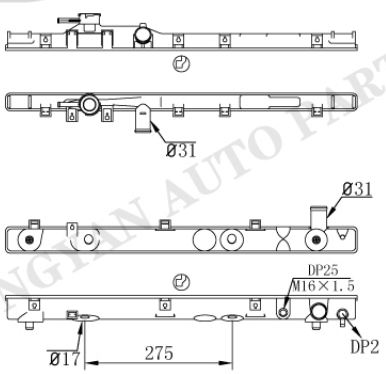

TO-0177-1AT

Tank size :(R9×4×5×33/48×660)
OEM :
DPI :
NISSENS :
APPLICATION :
94-99 TOYOTA CELICA 1.8L

HONGYAN AUTO PARTS

TOYOTA/LEXUS/HINO/SCION

TO-0179AT/MT

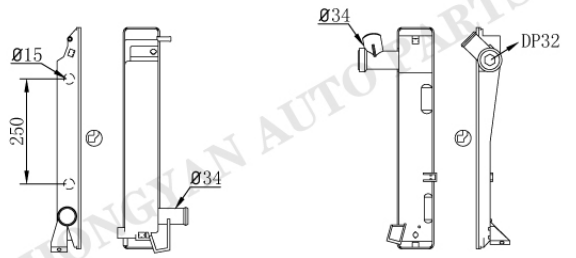

TO-0180

Tank size :(R9×4.5×4.5×69×416)
OEM :164005B750/40/54750/1/2/3
DPI :
NISSENS :64737
APPLICATION :
89- TOYOTA HIACE 2.4/2.8L(DIESEL)

TO-0181AT/MT

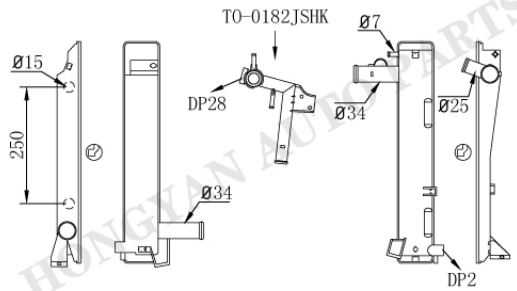

TO-0182

Tank size :(R9×4.5×4.5×69×416)
OEM :1640075350/071/330
DPI :
NISSENS :64778
APPLICATION :
89- TOYOTA HIACE 2.4/2.8L(GAS)

TO-0181AT/MT

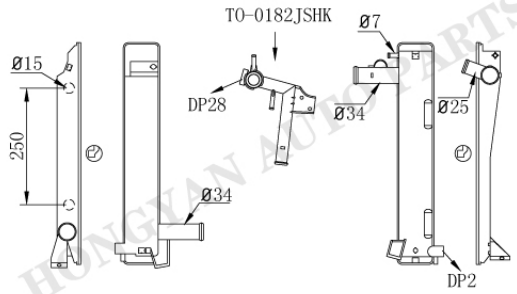

TO-0182-1

Tank size :(R9×4.5×4.5×69×416)
OEM :
DPI :
NISSENS :
APPLICATION :
89- TOYOTA HIACE 2.4/2.8L(GAS)

TO-0183

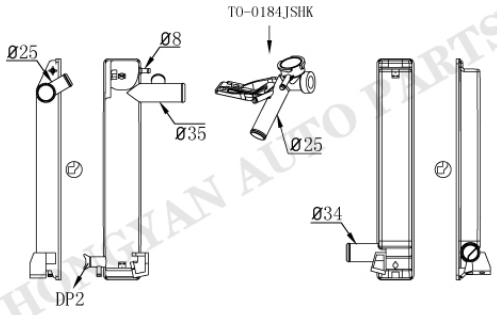

TO-0184

Tank size :(R9×4.5×4.5×69×416)
OEM :
DPI :
NISSENS :
APPLICATION :

TOYOTA/LEXUS/HINO/SCION

TO-0185

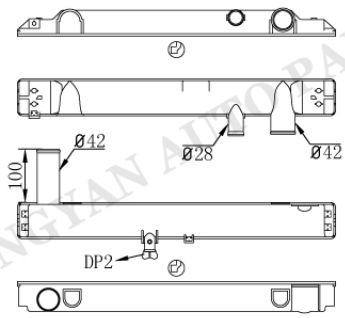

Tank size :(R9×5×5×69×597)
OEM :1640058570/1
DPI :
NISSENS :
APPLICATION :
97-99 TOYOTA COASTER

TO-0186

TO-0187

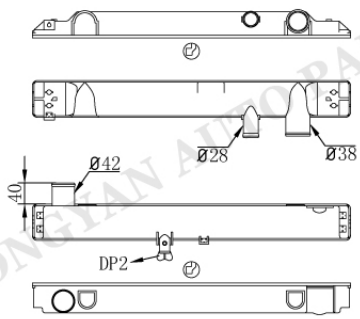

Tank size :(R9×5×5×69×597)
OEM :
DPI :
NISSENS :
APPLICATION :
97-99 TOYOTA COASTER

TO-0188

TO-0189

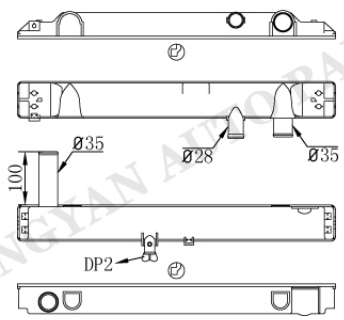

Tank size :(R9×5×5×69×597)
OEM :
DPI :
NISSENS :
APPLICATION :
97-99 TOYOTA COASTER

TO-0190

TO-0191

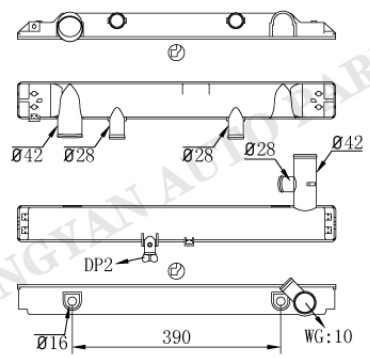

Tank size :(R9×5×5×69×597)
OEM :1640017251
DPI :
NISSENS :
APPLICATION :
97-99 TOYOTA COASTER

TO-0192AT/MT

TO-36

TOYOTA/LEXUS/HINO/SCION

TO-0193

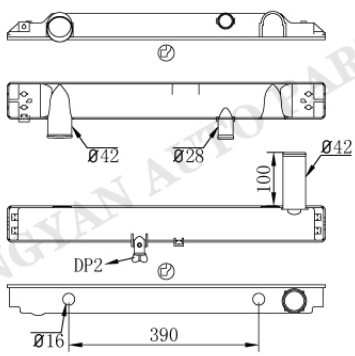

TO-0194AT/MT

Tank size :(R9×5×5×69×597)
OEM :
DPI :
NISSENS :
APPLICATION :
97-99 TOYOTA COASTER

TO-0193

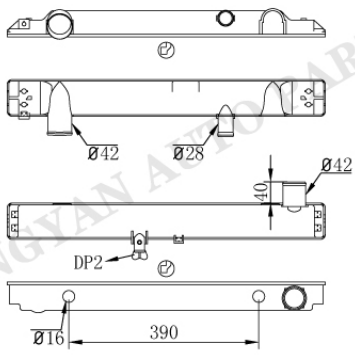

TO-0195AT/MT

Tank size :(R9×5×5×69×597)
OEM :
DPI :
NISSENS :
APPLICATION :
97-99 TOYOTA COASTER

TO-0196

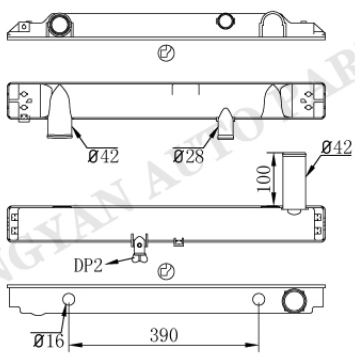

TO-0194AT/MT

Tank size :(R9×5×5×69×597)
OEM :
DPI :
NISSENS :
APPLICATION :
97-99 TOYOTA COASTER

TO-0196

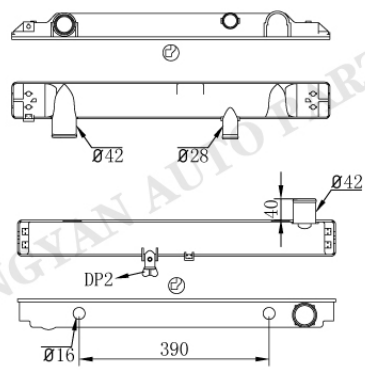

TO-0195AT/MT

Tank size :(R9×5×5×69×597)
OEM :
DPI :
NISSENS :
APPLICATION :
97-99 TOYOTA COASTER

HONGYAN AUTO PARTS

TOYOTA/LEXUS/HINO/SCION

TO-0197

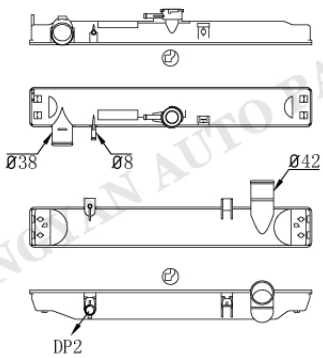

TO-0198

Tank size :(R9×5×4.5×75×528)
OEM :1640066060
DPI :
NISSENS :
APPLICATION :
02- TOYOTA LAND CRUISER

TO-0199

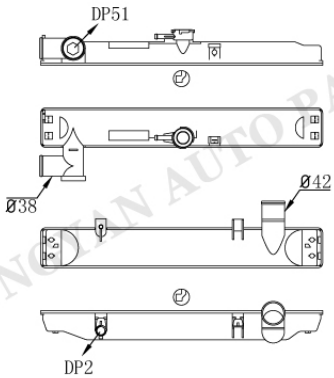

TO-0198

Tank size :(R9×5×4.5×75×528)
OEM :1640066160
DPI :
NISSENS :
APPLICATION :
05- TOYOTA LAND CRUISER

TO-0200

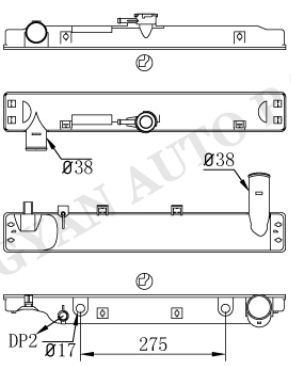

TO-0201AT/MT

Tank size :(R9×5×4.5×75×528)
OEM :1640017071/161
DPI :
NISSENS :
APPLICATION :
96-99 TOYOTA LAND CRUISER

TO-0202

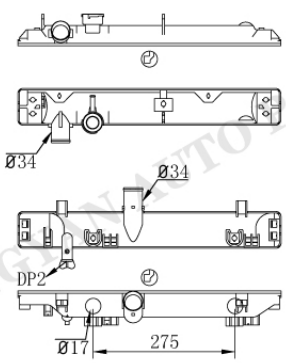

TO-0203AT/MT

Tank size :(R9.5×4.5×4.5×69×494)
OEM :164005B860/70
DPI :
NISSENS :
APPLICATION :
TOYOTA DYNA

HONGYAN AUTO PARTS

TOYOTA/LEXUS/HINO/SCION

TO-0204

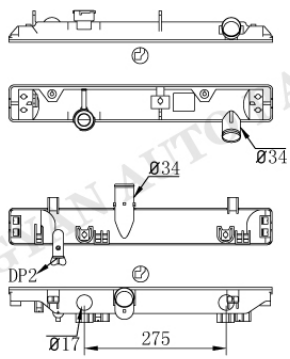

TO-0203AT/MT

Tank size :(R9.5×4.5×4.5×69×494)
OEM :1640075400/390
DPI :
NISSENS :
APPLICATION :
TOYOTA DYNA

TO-0205

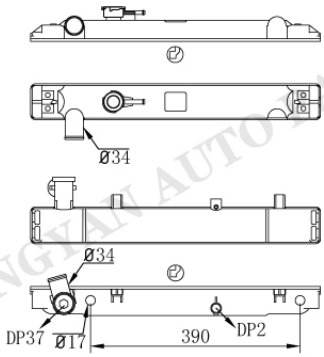

TO-0206AT/MT

Tank size :(R9×4.5×4.5×69×544)
OEM :1640058241/51/40/50
DPI :
NISSENS :
APPLICATION :
97-99 TOYOTA DYNA

TO-0207

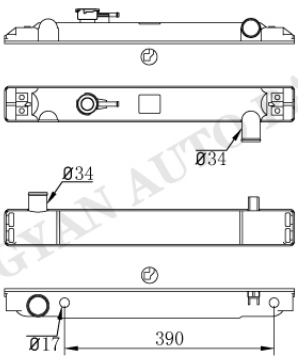

TO-0208AT/MT

Tank size :(R9×4.5×4.5×69×544)
OEM :1640073491/0/61/81
DPI :
NISSENS :
APPLICATION :
97-99 TOYOTA DYNA

TO-0205

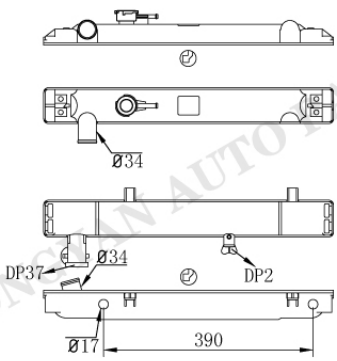

TO-0209AT/MT

Tank size :(R9×4.5×4.5×69×544)
OEM :1640058530/70/72/191/20/21
DPI :
NISSENS :
APPLICATION :
97-99 TOYOTA DYNA

HONGYAN AUTO PARTS

TOYOTA/LEXUS/HINO/SCION

TO-0210

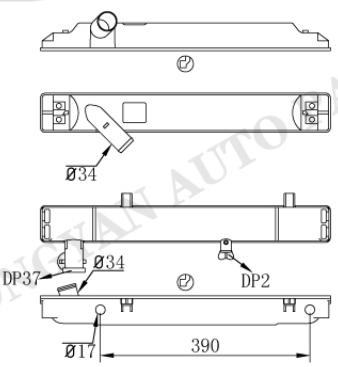

TO-0209AT/MT

Tank size :(R9×4.5×4.5×69×544)
OEM :1640058450/1/291
DPI :
NISSENS :
APPLICATION :
97-99 TOYOTA DYNA

TO-0210

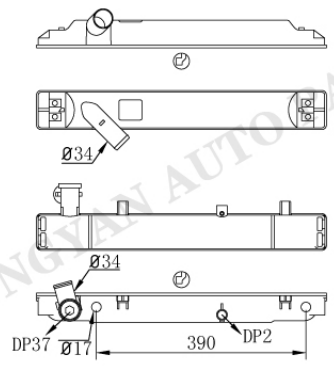

TO-0206AT/MT

Tank size :(R9×4.5×4.5×69×544)
OEM :1640058301/0
DPI :
NISSENS :
APPLICATION :
97-99 TOYOTA DYNA

TO-0211

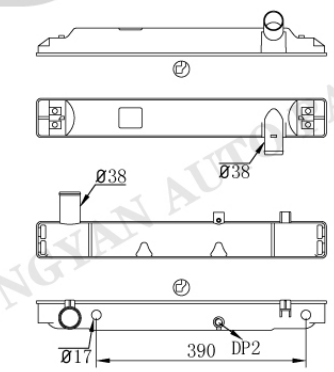

TO-0212AT/MT

Tank size :(R9×4.5×4.5×69×544)
OEM :1640058470/20/10/71
DPI :
NISSENS :
APPLICATION :
97-99 TOYOTA DYNA

TO-0211

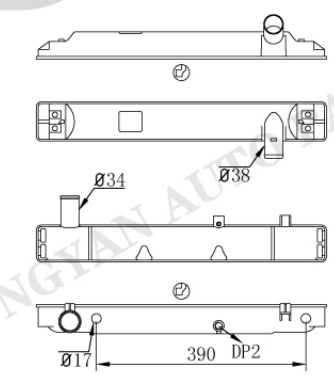

TO-0213AT/MT

Tank size :(R9×4.5×4.5×69×544)
OEM :1640058440/50/41/51
DPI :
NISSENS :
APPLICATION :
97-99 TOYOTA DYNA

HONGYAN AUTO PARTS

TOYOTA/LEXUS/HINO/SCION

TO-0211

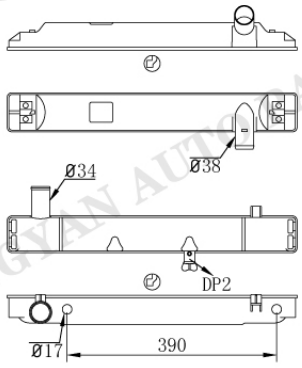

TO-0214AT/MT

Tank size :(R9×4.5×4.5×69×544)
OEM :1640058440/50/41/51
DPI :
NISSENS :
APPLICATION :
97-99 TOYOTA DYNA

TO-0211

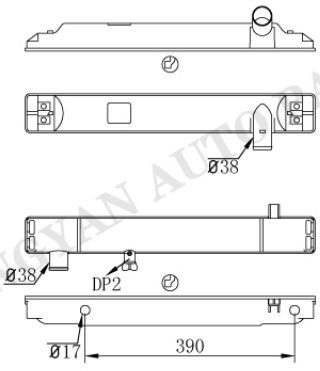

TO-0215AT/MT

Tank size :(R9×4.5×4.5×69×544)
OEM :1640058430
DPI :
NISSENS :
APPLICATION :
97-99 TOYOTA DYNA

TO-0216

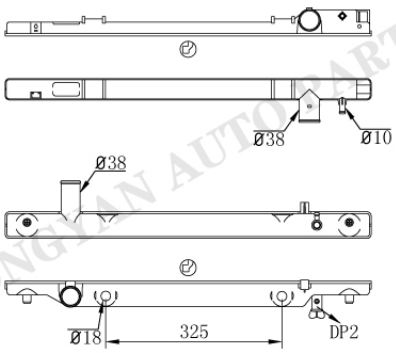

TO-0217AT/MT

Tank size :(R9.5×5×5×40/50×687.3)
OEM :1640076101/2/062/072
DPI :
NISSENS :
APPLICATION :
91-96 TOYOTA PREVIA
91-96 TOYOTA ESTIMA

TO-0218

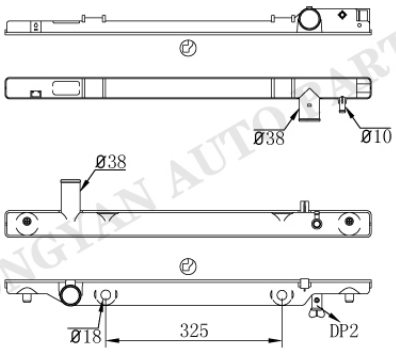

TO-0217AT/MT

Tank size :(R9.5×5×5×50×687.3)
OEM :1640076801/72
DPI :1155
NISSENS :
APPLICATION :
91-95 TOYOTA PREVIA 2.4L

HONGYAN AUTO PARTS

TOYOTA/LEXUS/HINO/SCION

TO-0219

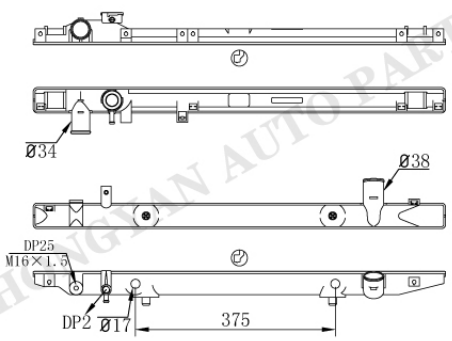

TO-0220AT/MT

Tank size :(R9×4×5×48×774)
OEM :1640046270/170/230
DPI :1854
NISSENS :
APPLICATION :
93-97 LEXUS GS300 3.0L

TO-0221

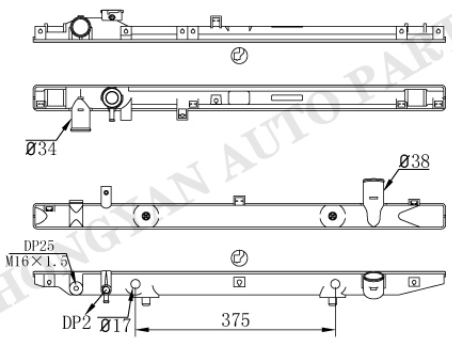

TO-0222AT/MT

Tank size :(R9×4×5×48×774)
OEM :1640046570
DPI :2222
NISSENS :
APPLICATION :
98-05 LEXUS GS300 3.0L

TO-0223

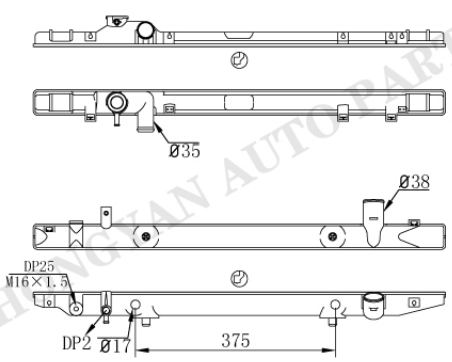

TO-0220AT/MT

Tank size :(R9×4×5×48×774)
OEM :1640046180
DPI :
NISSENS :
APPLICATION :
99- LEXUS GS300

TO-0224

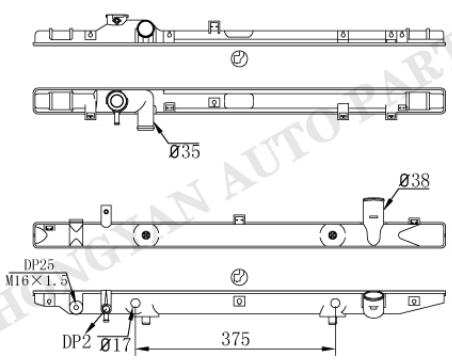

TO-0222AT/MT

Tank size :(R9×4×5×48×774)
OEM :1640046590
DPI :
NISSENS :
APPLICATION :
99- LEXUS GS300

HONGYAN AUTO PARTS

TOYOTA/LEXUS/HINO/SCION

TO-0225

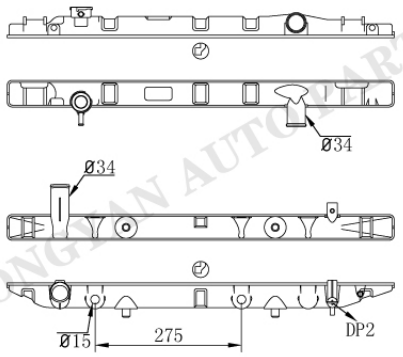

TO-0226AT/MT

Tank size :(R9.5×5×5×50×726)
OEM :1640035470/80
DPI :
NISSENS :
APPLICATION :
95-96 TOYOTA CRESSIDA

TO-0227

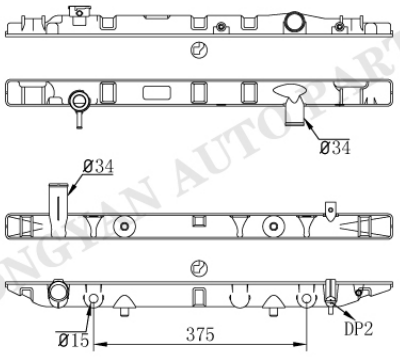

TO-0226-1AT

Tank size :(R9.5×5×5×50×726)
OEM :
DPI :
NISSENS :
APPLICATION :
95-96 TOYOTA CRESSIDA

TO-0228

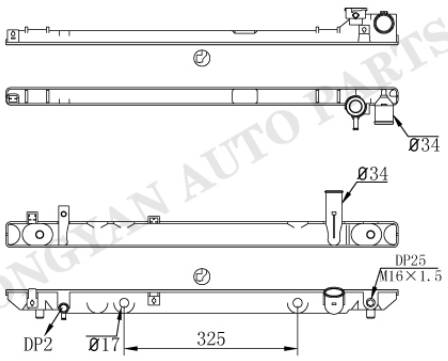

TO-0082AT/MT

Tank size :(R9×4×5×33/48×736)
OEM :1640046690/80
DPI :
NISSENS :
APPLICATION :
99- TOYOTA CROWN

TO-0229

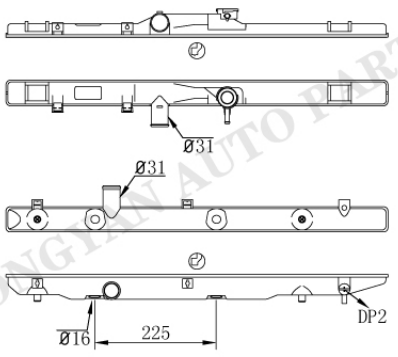

TO-0230AT/MT

Tank size :(R9×4×5×48×717)
OEM :1640015510/480/481
DPI :1409
NISSENS :
APPLICATION :
93-97 TOYOTA COROLLA 1.6/1.8L
93-97 GEO PRIZM 1.6/1.8L

HONGYAN AUTO PARTS

TOYOTA/LEXUS/HINO/SCION

TO-0231

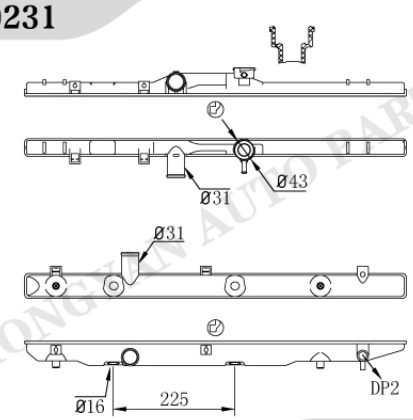

TO-0230AT/MT

Tank size :(R9×4×5×33/48×717)
OEM :
DPI :
NISSENS :
APPLICATION :
93-97 TOYOTA COROLLA 1.6/1.8L

TO-0232

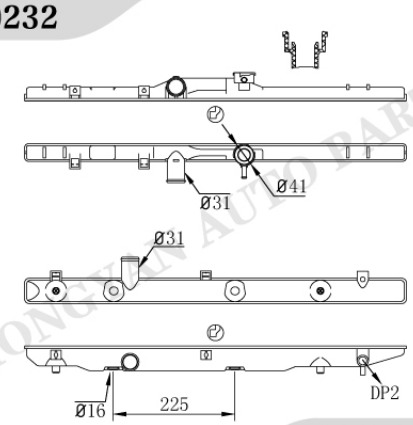

TO-0230AT/MT

Tank size :(R9×4×5×33/48×717)
OEM :
DPI :
NISSENS :
APPLICATION :
93-97 TOYOTA COROLLA 1.6/1.8L

TO-0233

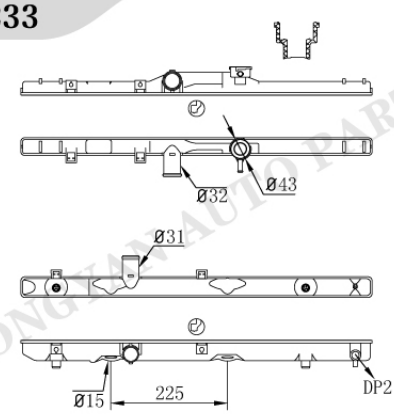

TO-0234AT/MT

Tank size :(R9×4×5×33/40×660)
OEM :1640015500/01/700/690
DPI :1436 1408
NISSENS :
APPLICATION :
93-97 TOYOTA COROLLA 1.6/1.8L

TO-0235

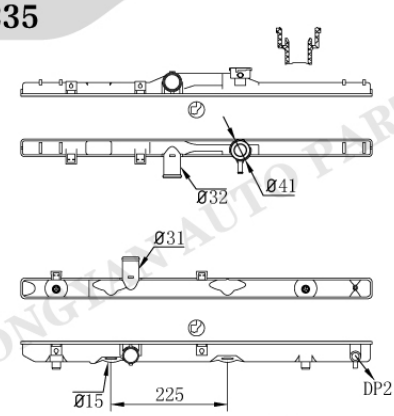

TO-0234AT/MT

Tank size :(R9×4×5×33/40×660)
OEM :1640015500/01/700/690
DPI :
NISSENS :
APPLICATION :
93-97 TOYOTA COROLLA 1.6/1.8L

HONGKUN AUTO PARTS

TOYOTA/LEXUS/HINO/SCION

TO-0236

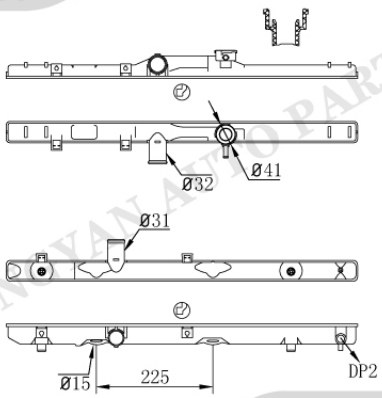

TO-0237AT/MT

Tank size :(R9×5×5×40×660)
OEM :
DPI :
NISSENS :
APPLICATION :
93-97 TOYOTA COROLLA 1.6/1.8L

TO-0238

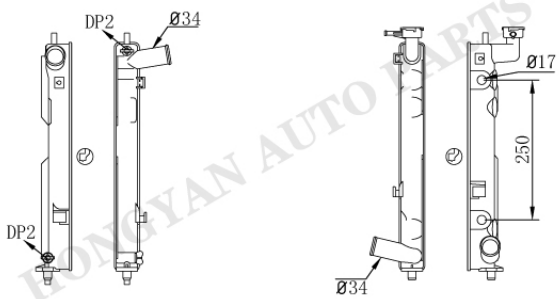

TO-0239AT/MT

Tank size :(R9×4×5×48×428.5)
OEM :1640028350
DPI :2776
NISSENS :
APPLICATION :
05-14 SCION TC 2.4/2.5L

TO-0240

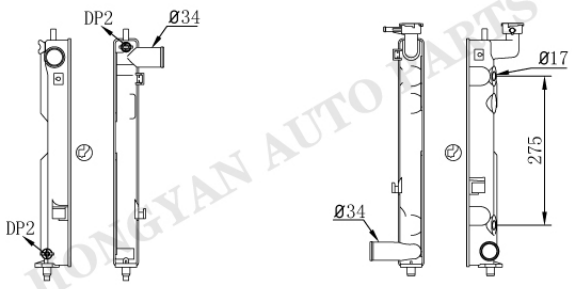

TO-0241AT/MT

Tank size :(R9×4×5×48×428.5)
OEM :1640022050/7A590
DPI :
NISSENS :
APPLICATION :

TO-0242

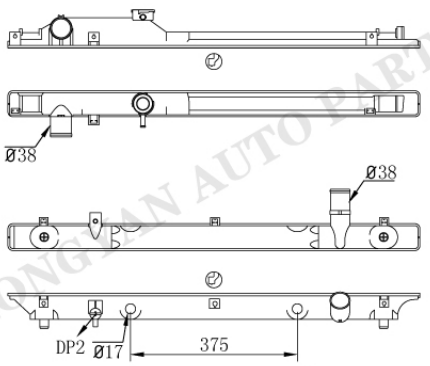

TO-0243AT/MT

Tank size :(R9×4×5×48×774)
OEM :1640050250/230
DPI :2419 2418
NISSENS :
APPLICATION :
01-06 LEXUS LS430 4.3L

TOYOTA/LEXUS/HINO/SCION

TO-0244

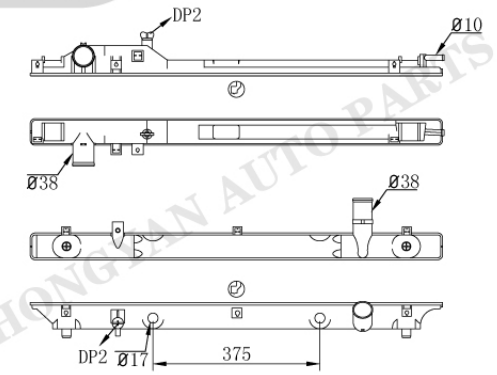

TO-0243AT/MT

Tank size :(R9×4×5×48×774)
OEM :
DPI :
NISSENS :
APPLICATION :

TO-0245

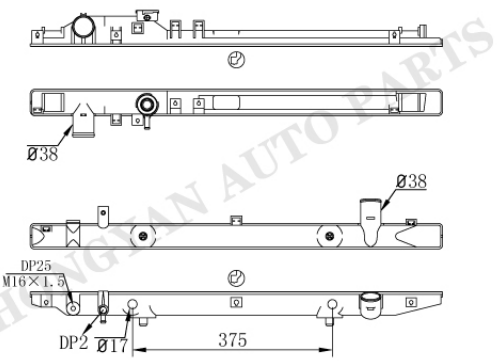

TO-0222AT/MT

Tank size :(R9×4×5×48×774)
OEM :1640050280
DPI :2575 2541
NISSENS :
APPLICATION :
02-10 LEXUS SC430 4.3L

TO-0246

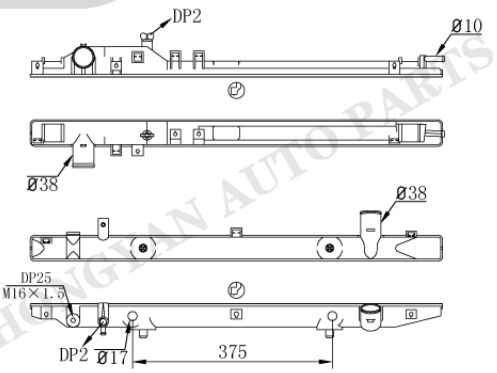

TO-0222AT/MT

Tank size :(R9×4×5×48×774)
OEM :
DPI :
NISSENS :
APPLICATION :

TO-0247

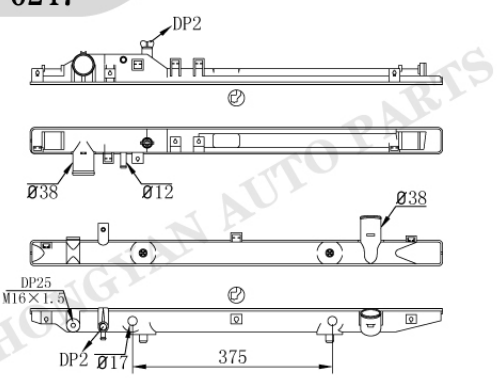

TO-0222AT/MT

Tank size :(R9×4×5×48×774)
OEM :
DPI :
NISSENS :
APPLICATION :

HONGYAN AUTO PARTS

TOYOTA/LEXUS/HINO/SCION

TO-0248

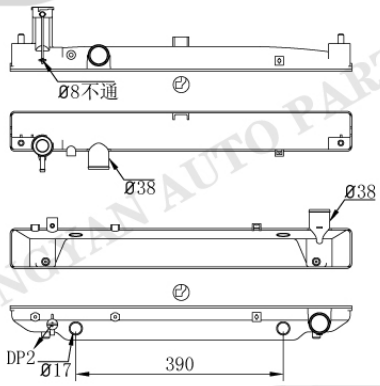

TO-0249AT/MT

Tank size :(R9×4.5×4.5×75×642)
OEM :1640067100
DPI :
NISSENS :64859A 64649A
APPLICATION :
95- TOYOTA HIACE 3.0L(GAS)

TO-0250

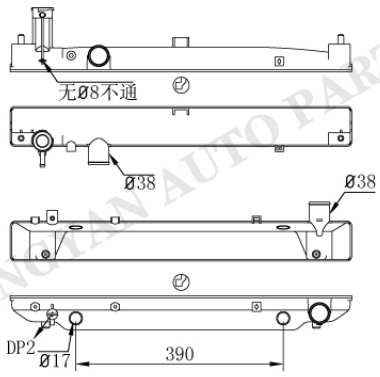

TO-0249AT/MT

Tank size :(R9×4.5×4.5×75×642)
OEM :
DPI :
NISSENS :
APPLICATION :

TO-0251

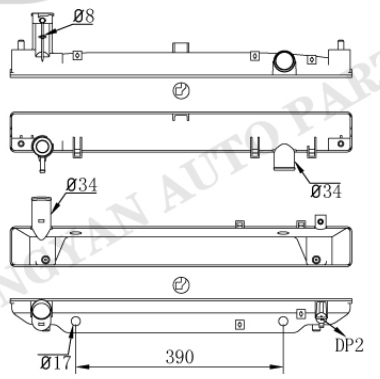

TO-0252AT/MT

Tank size :(R9×4.5×4.5×75×642)
OEM :164005B320 1640075321
DPI :
NISSENS :64857A
APPLICATION :
95- TOYOTA HIACE 2.4L(DIESEL)

TO-0253

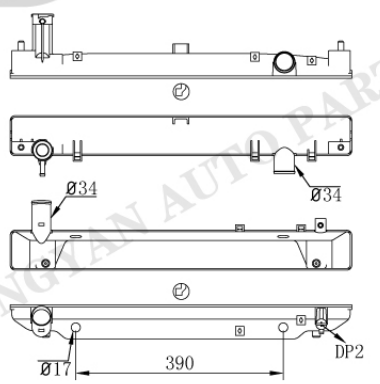

TO-0252AT/MT

Tank size :(R9×4.5×4.5×75×642)
OEM :164005B320 1640075321
DPI :
NISSENS :64858A
APPLICATION :
95- TOYOTA HIACE 2.4/2.7L(GAS)

HONGYAN AUTO PARTS

TOYOTA/LEXUS/HINO/SCION

TO-0254

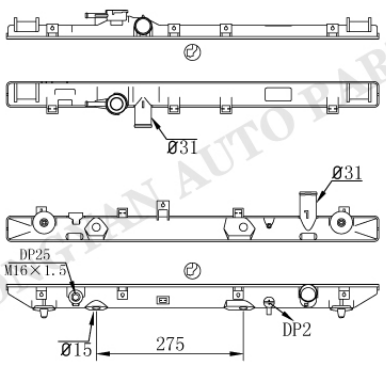

TO-0255AT/MT

Tank size :(R8.5×4×5×48×697.5)
OEM :1644174680
DPI :
NISSENS :
APPLICATION :

TO-0256

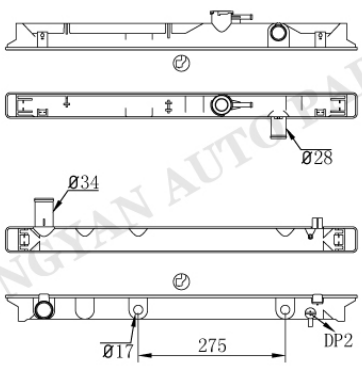

TO-0257AT/MT

Tank size :(R9×4×5×48×660)
OEM :
DPI :
NISSENS :
APPLICATION :

TO-0258

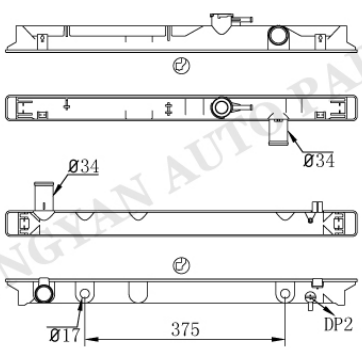

TO-0257-1AT

Tank size :(R9×4×5×48×660)
OEM :
DPI :
NISSENS :
APPLICATION :

TO-0259

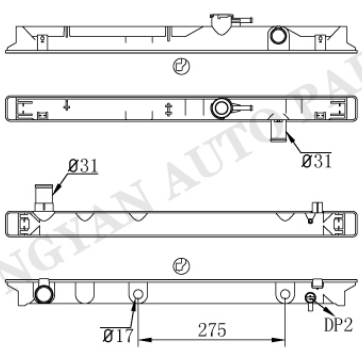

TO-0260AT/MT

Tank size :(R9×4×5×48×660)
OEM :
DPI :
NISSENS :
APPLICATION :

HONGYAN AUTO PARTS

TOYOTA/LEXUS/HINO/SCION

TO-0259

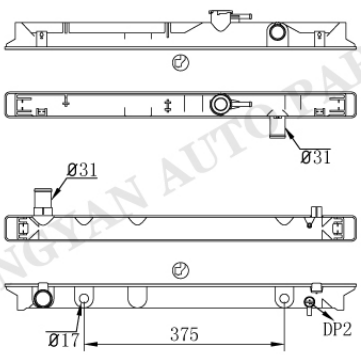

TO-0260-1AT

Tank size :(R9×4×5×48×660)
OEM :
DPI :
NISSENS :
APPLICATION :

TO-0261

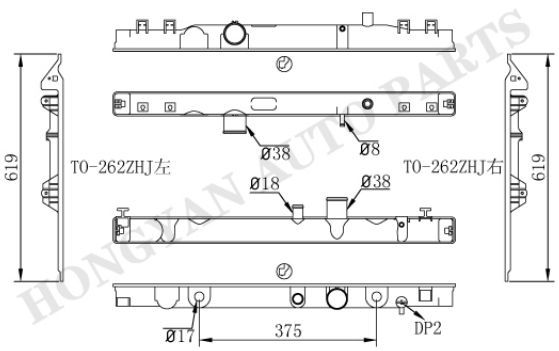

TO-0262AT/MT

Tank size :(R9×4×5×48×678.3)
OEM :164000L150/40/60
DPI :
NISSENS :646807 64681
APPLICATION :
06- TOYOTA HILUX 2.5/3.0L

TO-0263

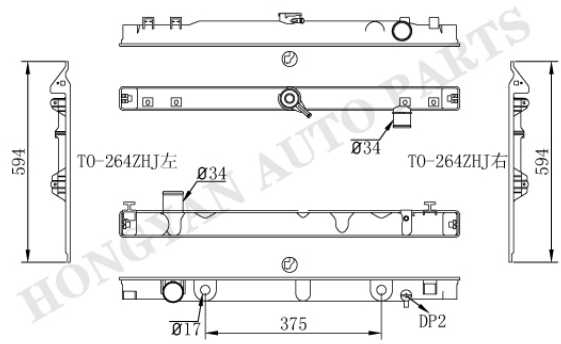

TO-0264AT/MT

Tank size :(R9×4×5×48×678.3)
OEM :164100C140/120
DPI :
NISSENS :
APPLICATION :
06- TOYOTA HILUX

TO-0265

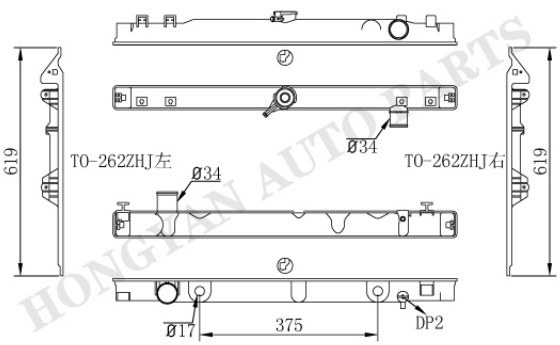

TO-0264AT/MT

Tank size :(R9×4×5×48×678.3)
OEM :164000P606/40/45
DPI :
NISSENS :
APPLICATION :
06- TOYOTA HILUX

TOYOTA/LEXUS/HINO/SCION

TO-0266

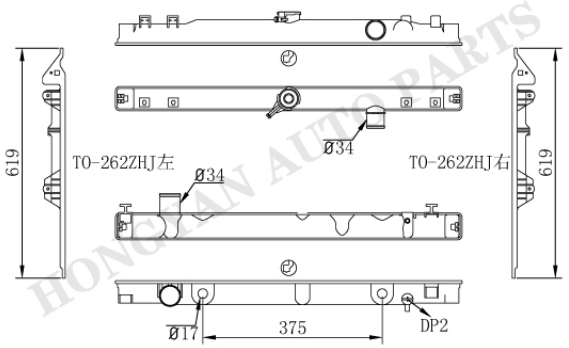

TO-0264AT/MT

Tank size :(R9×4×5×48×678.3)
OEM :
DPI :
NISSENS :
APPLICATION :
06- TOYOTA HILUX

TO-0265

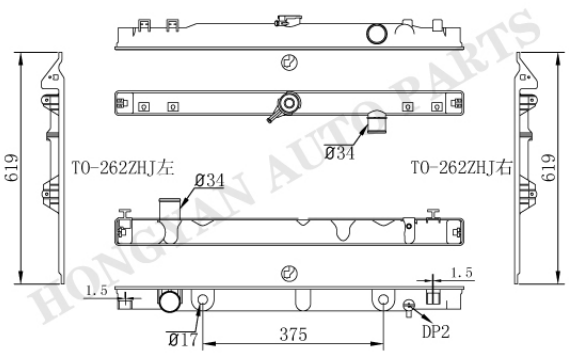

TO-0267AT/MT

Tank size :(R9×4×5×48×678.3)
OEM :
DPI :
NISSENS :
APPLICATION :
06- TOYOTA HILUX

TO-0268

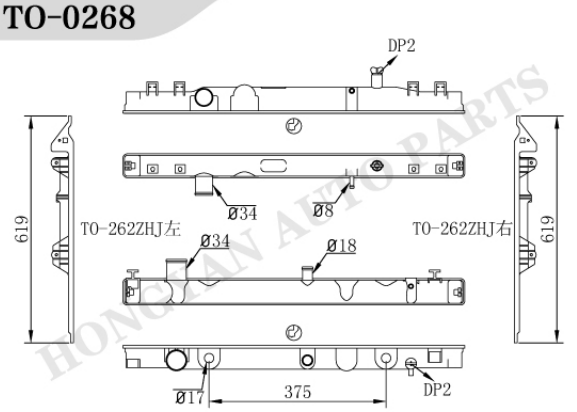

TO-0269AT/MT

Tank size :(R9×4×5×48×678.3)
OEM :1640005160
DPI :
NISSENS :
APPLICATION :

TO-0268

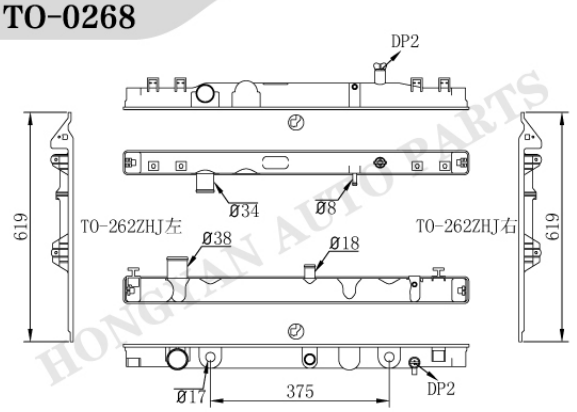

TO-0270AT/MT

Tank size :(R9×4×5×48×678.3)
OEM :
DPI :
NISSENS :
APPLICATION :

TOYOTA/LEXUS/HINO/SCION

TO-0271

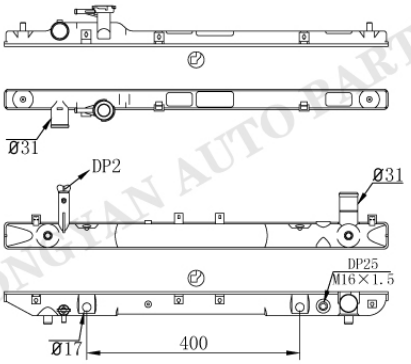

TO-0272AT/MT

Tank size :(R8.5×4.5×5×40/50×720)
OEM :164007A470/80
DPI :2292 2293
NISSENS :
APPLICATION :
98-00 TOYOTA RAV4 2.0L

TO-0273

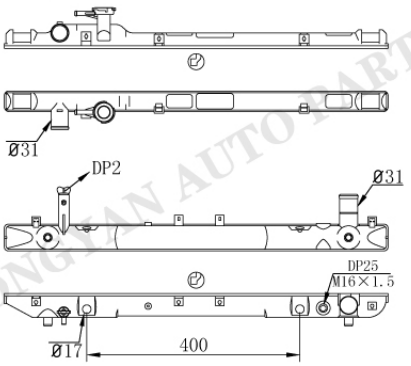

TO-0272AT/MT

Tank size :(R8.5×4.5×5×40/50×720)
OEM :164007A120/10/21/11
DPI :1859 1860
NISSENS :
APPLICATION :
96-97 TOYOTA RAV4 2.0L

TO-0274

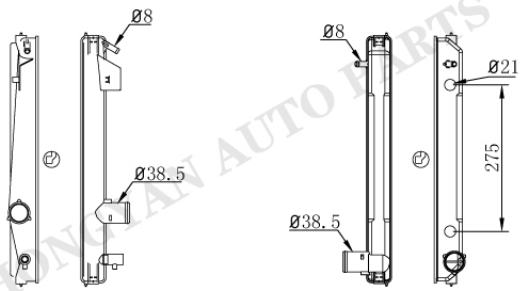

TO-0275AT/MT

Tank size :(R9.5×4.5×4.5×47×463)
OEM :1640031430
DPI :2893
NISSENS :
APPLICATION :
06-14 TOYOTA RAV4 2.5/3.5L

TO-0274

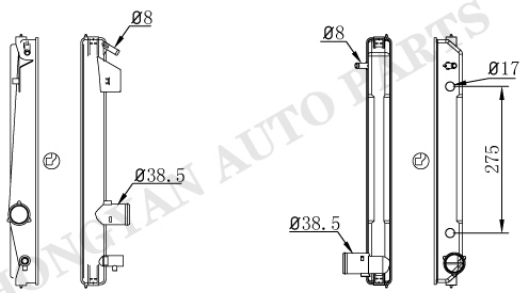

TO-0275-1AT

Tank size :(R9.5×4.5×4.5×47×463)
OEM :1640031430
DPI :2893
NISSENS :
APPLICATION :
06-14 TOYOTA RAV4 2.5/3.5L

HONGYAN AUTO PARTS

TOYOTA/LEXUS/HINO/SCION

TO-0276

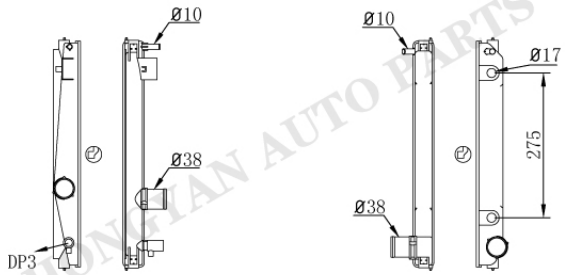

TO-0277AT/MT

Tank size :(R9×4.5×5×39.5×424.5)
OEM :1640031420/28590
DPI :2891 2892
NISSENS :
APPLICATION :
06-14 TOYOTA RAV4 2.5/3.5L

TO-0278

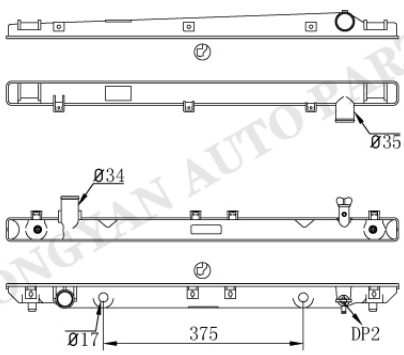

TO-0050AT/MT

Tank size :(R9×4×5×48×736)
OEM :164000A030/1/2
DPI :1874
NISSENS :
APPLICATION :
95-99 TOYOTA AVALON

TO-0279

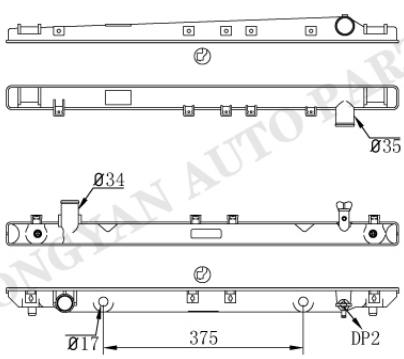

TO-0050AT/MT

Tank size :(R9×4×5×48×736)
OEM :
DPI :
NISSENS :
APPLICATION :
95-99 TOYOTA AVALON

TO-0280

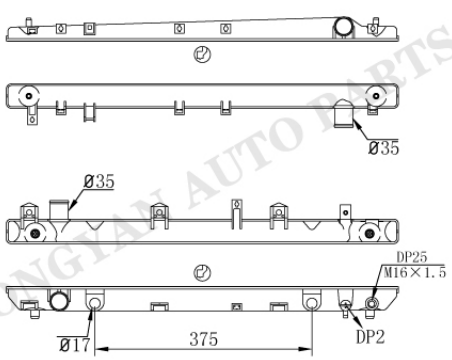

TO-0281AT/MT

Tank size :(R9×4×5×48×736)
OEM :164000A170/80
DPI :2324 2325
NISSENS :
APPLICATION :
00-04 TOYOTA AVALON 3.0L

HONGYAN AUTO PARTS

TOYOTA/LEXUS/HINO/SCION

TO-0282

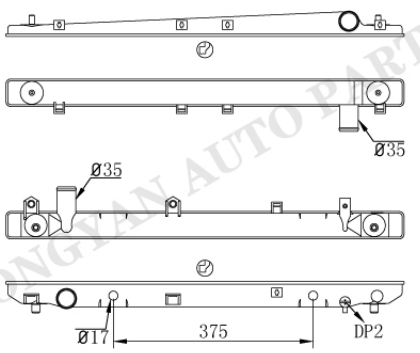

TO-0283AT/MT

Tank size :(R9×4.5×5×51.5×747)
OEM :164000A071/2
DPI :2153 2427
NISSENS :
APPLICATION :
98-03 TOYOTA SIENNA 3.0L

TO-0282

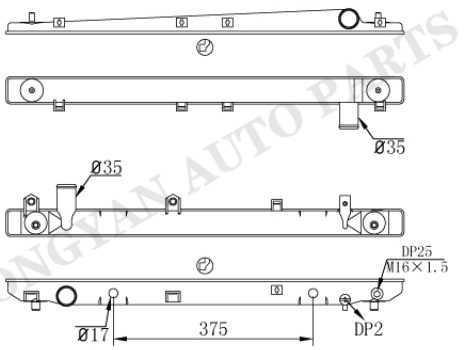

TO-0284AT/MT

Tank size :(R9×4.5×5×51.5×747)
OEM :164000A071/2
DPI :2153 2427
NISSENS :
APPLICATION :
98-03 TOYOTA SIENNA 3.0L

TO-0285

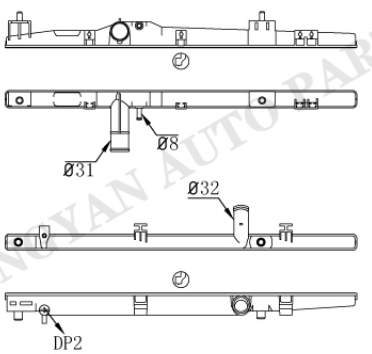

TO-0286

Tank size :(R9×4×5×33×660)
OEM :164000N011
DPI :
NISSENS :
APPLICATION :

TO-0287

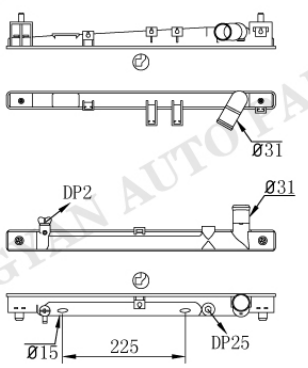

TO-0288AT/MT

Tank size :(R9×4×5×33/40×505)
OEM :1640021070/80/60
DPI :2304 2305
NISSENS :64798 64799
APPLICATION :
00-05 TOYOTA ECHO 1.5L
04-06 SCION XA 1.5L

HONGYAN AUTO PARTS

TOYOTA/LEXUS/HINO/SCION

TO-0289

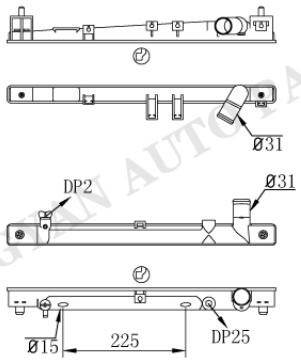

TO-0290AT/MT

Tank size :(R9×5×5×33/40×505)
OEM :
DPI :
NISSENS :
APPLICATION :
00-05 TOYOTA ECHO 1.5L
04-06 SCION XA 1.5L

TO-0291

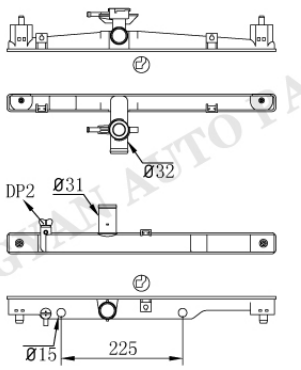

TO-0292AT/MT

Tank size :(R9×4×5×33/40×505)
OEM :1640023090/100/111/091
DPI :
NISSENS :
APPLICATION :

TO-0293

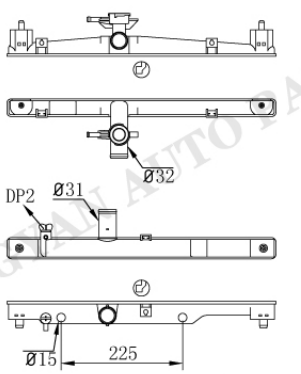

TO-0294AT/MT

Tank size :(R9×5×5×33/40×505)
OEM :
DPI :
NISSENS :
APPLICATION :

TO-0295

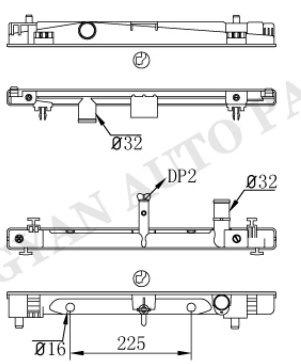

TO-0296AT/MT

Tank size :(R9×4×5×33/40×505)
OEM :1640021270/300/0M060
DPI :2890 2889
NISSENS :
APPLICATION :
06-14 TOYOTA YARIS 1.5L
08-14 SCION XD 1.8L

HONGTAI AUTO PARTS

TOYOTA/LEXUS/HINO/SCION

TO-0297

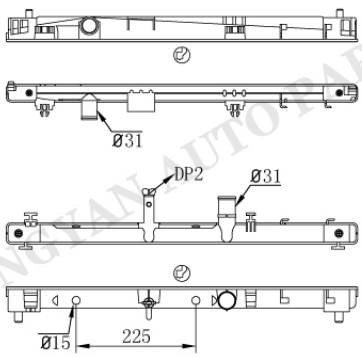

TO-0298AT/MT

Tank size :(R9×4×5×33/40×660)
OEM :1640021260/310
DPI :
NISSENS :
APPLICATION :
07-12 TOYOTA YARIS 1.5
07-12 TOYOTA VITZ 1.5L

TO-0299AT/MT

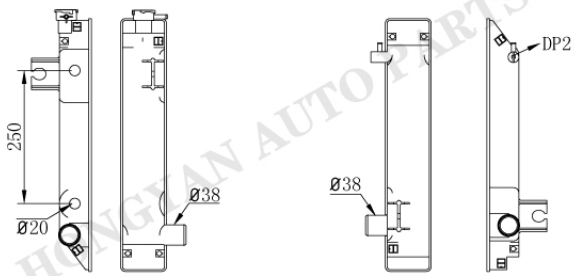

TO-0300

Tank size :(R9×5×5×86×475)
OEM :1641023650/71
DPI :
NISSENS :
APPLICATION :
94- LIFT

TO-0301

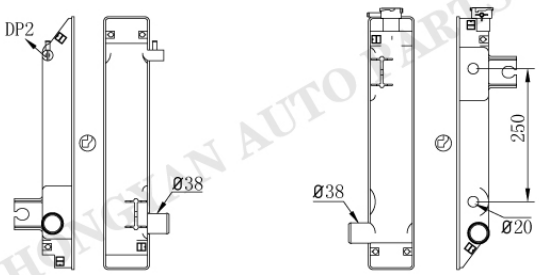

TO-0302AT/MT

Tank size :(R9×5×5×86×475)
OEM :
DPI :
NISSENS :
APPLICATION :

TO-0303

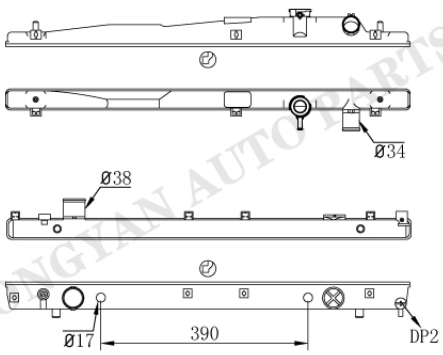

TO-0304AT/MT

Tank size :(R9×4.5×5×39.5×760)
OEM :164007A140/30/20170
DPI :
NISSENS :
APPLICATION :
99-03 TOYOTA ESTIMA

HONGYAN AUTO PARTS

TOYOTA/LEXUS/HINO/SCION

TO-0305

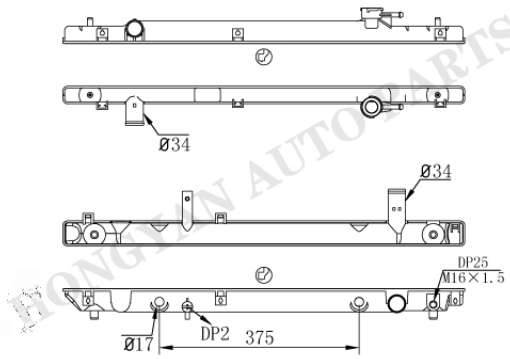

TO-0306AT/MT

Tank size :(R9×4×5×33/48×755)
OEM :164007A550
DPI :2453
NISSENS :
APPLICATION :
01-07 TOYOTA HINGLANDER 2.4L

TO-0305

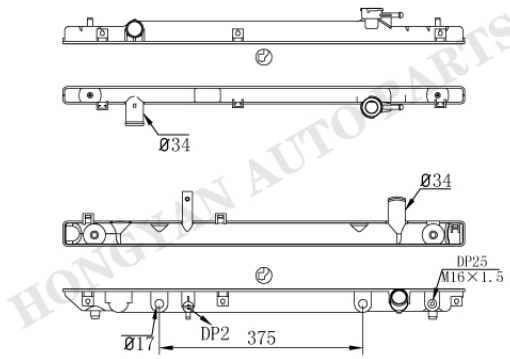

TO-0307AT/MT

Tank size :(R9×4×5×33/48×755)
OEM :
DPI :
NISSENS :
APPLICATION :
01-07 TOYOTA HINGLANDER 2.4L

TO-0308

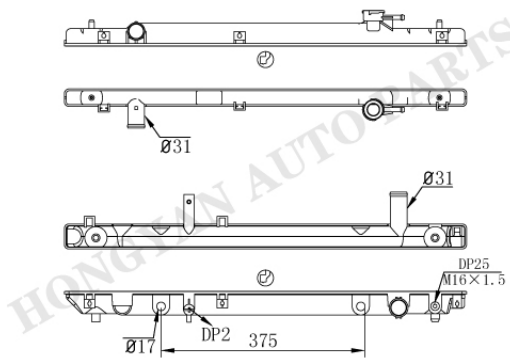

TO-0309AT/MT

Tank size :(R9×4×5×33/48×755)
OEM :1640028220/40
DPI :
NISSENS :
APPLICATION :

TO-0310

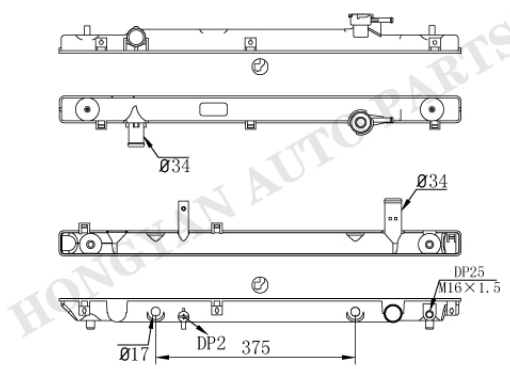

TO-0306AT/MT

Tank size :(R9×4×5×48×755)
OEM :1640028260
DPI :2454
NISSENS :
APPLICATION :
01-07 TOYOTA HINGLANDER 2.4L

TOYOTA/LEXUS/HINO/SCION

TO-0311

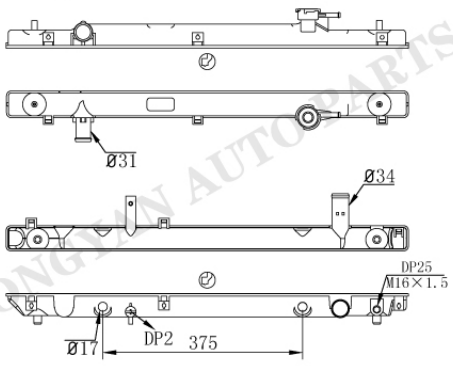

TO-0306AT/MT

Tank size :(R9×4×5×48×755)
OEM :
DPI :
NISSENS :
APPLICATION :
01-07 TOYOTA HINGLANDER 2.4L

TO-0312

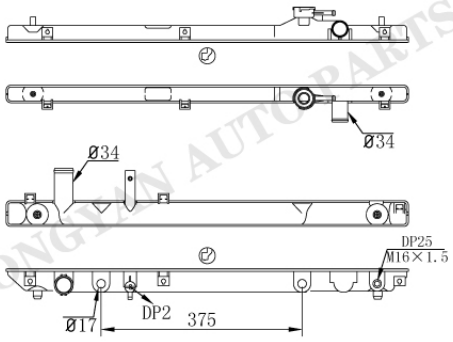

TO-0313AT/MT

Tank size :(R9×4×5×33/48×755)
OEM :1640020200
DPI :2452
NISSENS :
APPLICATION :
01-03 TOYOTA HINGLANDER 3.0L

TO-0312

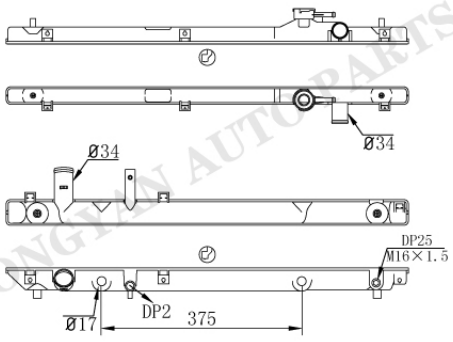

TO-0314AT/MT

Tank size :(R9×4×5×33/48×755)
OEM :
DPI :
NISSENS :
APPLICATION :
01-03 TOYOTA HINGLANDER 3.0L

TO-0315

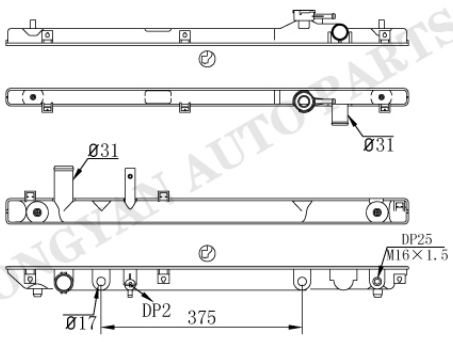

TO-0316AT/MT

Tank size :(R9×4×5×48×755)
OEM :1640020240
DPI :2377 2271 2272
NISSENS :
APPLICATION :
01-07 TOYOTA HINGLANDER 3.0/3.3L

HONGYAN AUTOPARTS

TOYOTA/LEXUS/HINO/SCION

TO-0317

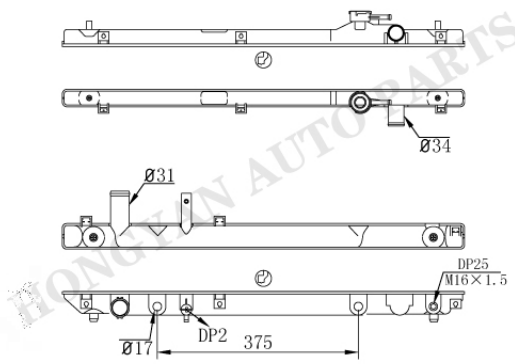

TO-0316AT/MT

Tank size :(R9×4×5×48×755)
OEM :
DPI :
NISSENS :
APPLICATION :
01-07 TOYOTA HINGLANDER 3.0/3.3L

TO-0318AT/MT

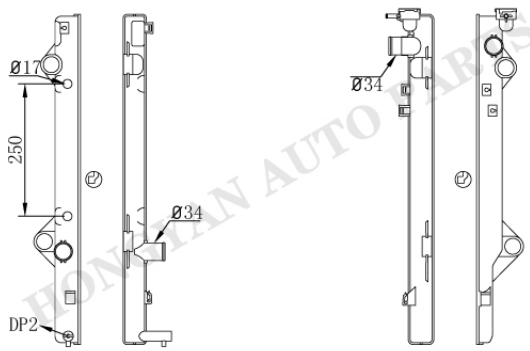

TO-0319

Tank size :(R8.5×4×5×48×620)
OEM :1640062230/75451
DPI :2580
NISSENS :
APPLICATION :
03-09 TOYOTA 4RUNNER 4.0L
07-14 TOYOTA FJ CRUISER 4.0L

TO-0320

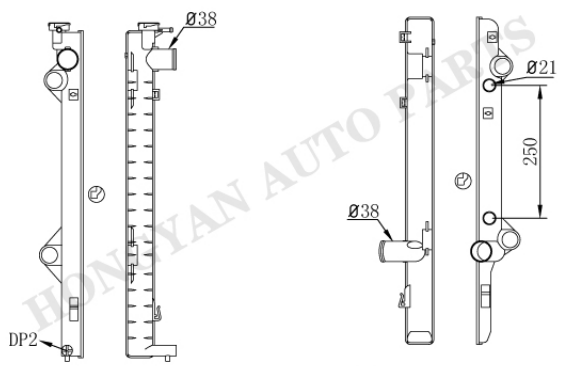

TO-0321AT/MT

Tank size :(R9.5×4.5×4.5×53.5×614.5)
OEM :1640050300
DPI :2581
NISSENS :
APPLICATION :
03-09 TOYOTA 4RUNNER 4.7L
03-09 LEXUS GX470 4.7L

TO-0322

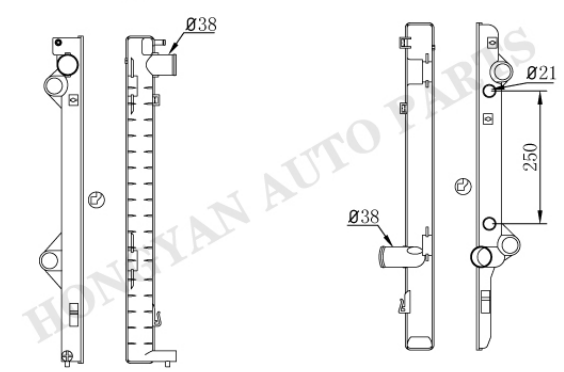

TO-0321AT/MT

Tank size :(R9.5×4.5×4.5×53.5×614.5)
OEM :
DPI :
NISSENS :
APPLICATION :
03-09 TOYOTA 4RUNNER 4.7L
03-09 LEXUS GX470 4.7L

HONGYAN AUTO PARTS

TOYOTA/LEXUS/HINO/SCION

TO-0323AT/MT

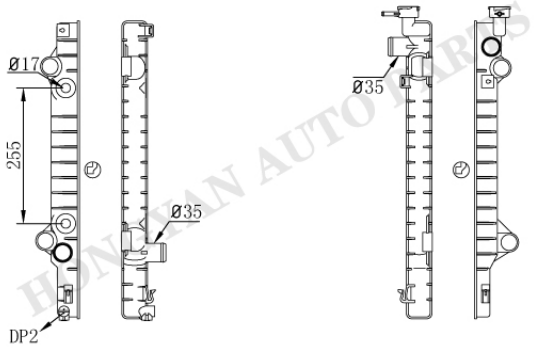

TO-0324

Tank size :(R10×5×4×48×560.5)
OEM :164100C180/190/P030/P040
DPI :2802 2801 2802
NISSENS :
APPLICATION :
05-14 TOYOTA TACOMA 2.7/4.0L

TO-0325AT/MT

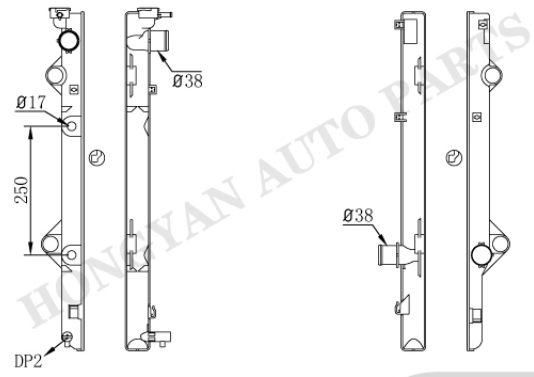

TO-0326

Tank size :(R8.5×4×5×48×658)
OEM :1640038250
DPI :
NISSENS :
APPLICATION :
09- LEXUS GX460

TO-0327

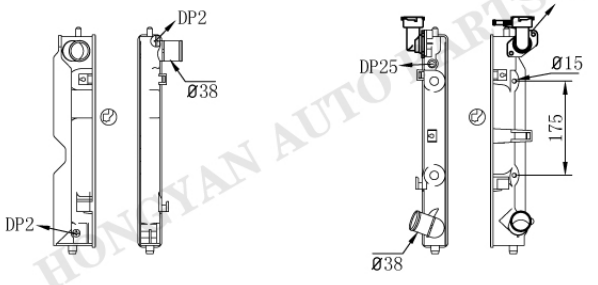

TO-0328AT/MT

Tank size :(R9×4×5×48×400)
OEM :164006A290/300
DPI :
NISSENS :
APPLICATION :
05- TOYOTA COROLLA

TO-0329

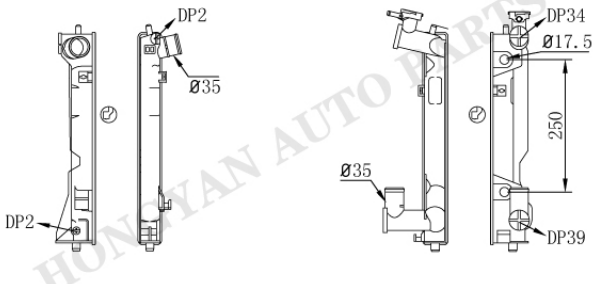

TO-0330AT/MT

Tank size :(R9×4×5×48×400)
OEM :164000H180
DPI :
NISSENS :64688A
APPLICATION :
03- TOYOTA AVENSIS 2.0/2.4L

TOYOTA/LEXUS/HINO/SCION

TO-0331

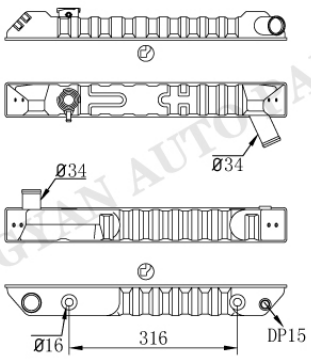

Tank size :(R4.5×5.5×5×65×529)
OEM :1640065040/1/50
DPI :
NISSENS :64847
APPLICATION :
88- TOYOTA HILUX 3.0L
85- TOYOTA 4RUNNER 3.0L

TO-0332AT/MT

TO-0333

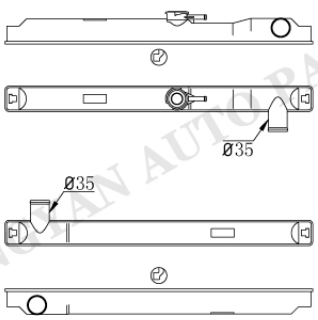

Tank size :(R8×4×4.5×48×578)
OEM :
DPI :
NISSENS :
APPLICATION :

TO-0334

TO-0335

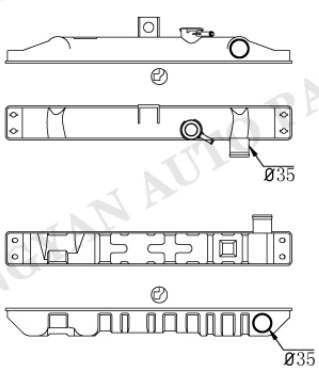

Tank size :(R9×5×7×64×538)
OEM :
DPI :
NISSENS :
APPLICATION :

TO-0336

TO-0337

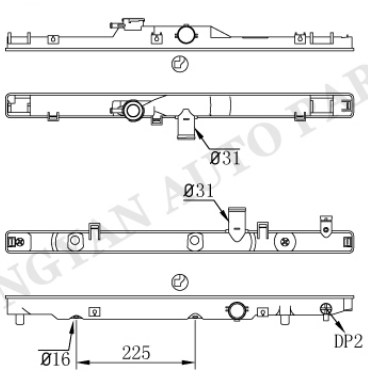

Tank size :(R9×5×5×46×654)
OEM :164000D030/40
DPI :2198
NISSENS :646281 64747A
APPLICATION :
98-02 TOYOTA COROLLA 1.8L
98-02 CHEVROLET PRIZM 1.8L

TO-0338AT/MT

TO-60

HONGTAN AUTO PARTS

TOYOTA/LEXUS/HINO/SCION

TO-0339

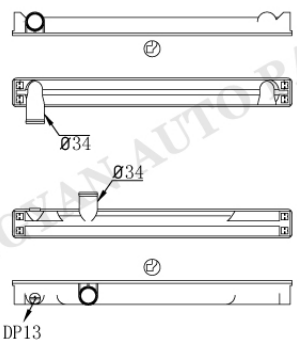

Tank size :(R8.5×5×5×54×525)
OEM :
DPI :
NISSENS :
APPLICATION :

TO-0340

TO-0341

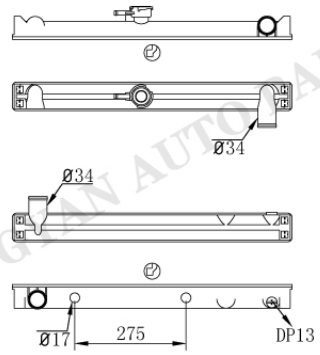

Tank size :(R8.5×5×5×54×525)
OEM :1640004020/71070
DPI :945
NISSENS :64728
APPLICATION :
84- TOYOTA HILUX 1.6/1.8/2.0/2.2L
85- TOYOTA 4RUNNER 2.4L

TO-0342AT/MT

TO-0341

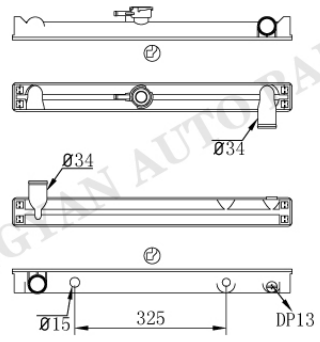

Tank size :(R8.5×5×5×54×525)
OEM :
DPI :
NISSENS :
APPLICATION :
84- TOYOTA HILUX 1.6/1.8/2.0/2.2L
85- TOYOTA 4RUNNER 2.4L

TO-0342-1AT

TO-0341

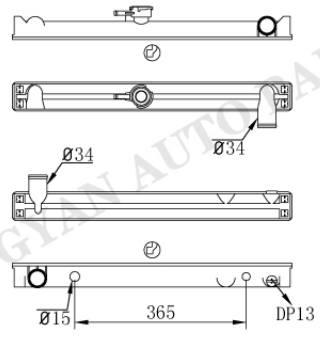

Tank size :(R8.5×5×5×54×525)
OEM :
DPI :
NISSENS :
APPLICATION :
84- TOYOTA HILUX 1.6/1.8/2.0/2.2L
85- TOYOTA 4RUNNER 2.4L

TO-0342-2AT

HONGYAN AUTO PARTS

TOYOTA/LEXUS/HINO/SCION

TO-0343

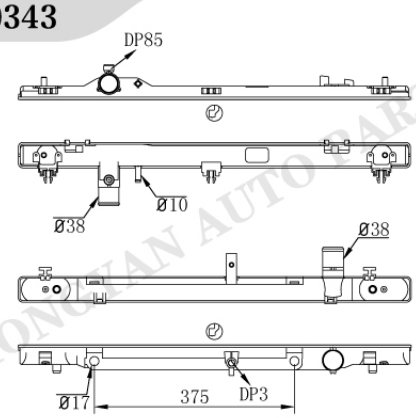

TO-0344AT/MT

Tank size :(R9×4×5×48×736)
OEM :1640038240
DPI :13037
NISSENS :
APPLICATION :
07-14 LEXUS LS460 4.6L

TO-0345

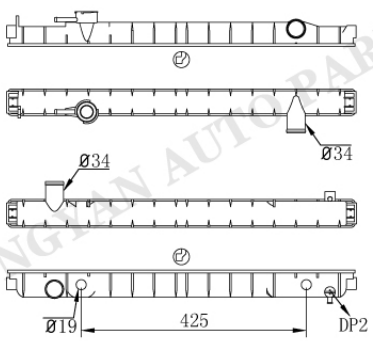

TO-0346AT/MT

Tank size :(R10×4.5×5×51×652)
OEM :1641007060
DPI :1755 1774 1778 1985 1986
NISSENS :
APPLICATION :
95-04 TOYOTA TACOMA 2.4/2.7/3.4L

TO-0347

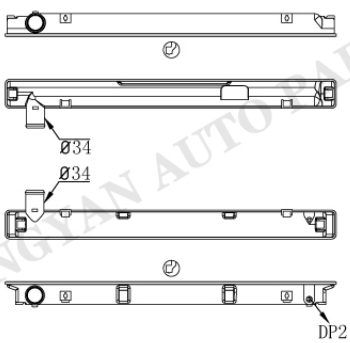

TO-0348

Tank size :(R9×4×5×54.5×621.5)
OEM :
DPI :
NISSENS :
APPLICATION :

TO-0349

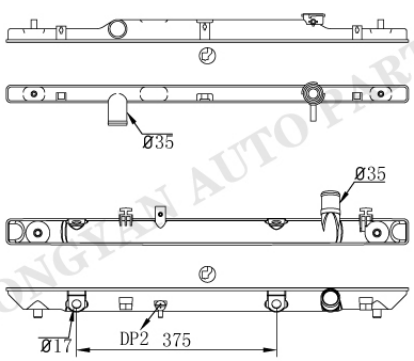

TO-0350AT/MT

Tank size :(R9×4×5×33/48×755)
OEM :16400H040/50
DPI :2623
NISSENS :
APPLICATION :
02-03 TOYOTA SOLARA 2.4L

HONGYAN AUTO PARTS

TOYOTA/LEXUS/HINO/SCION

TO-0351

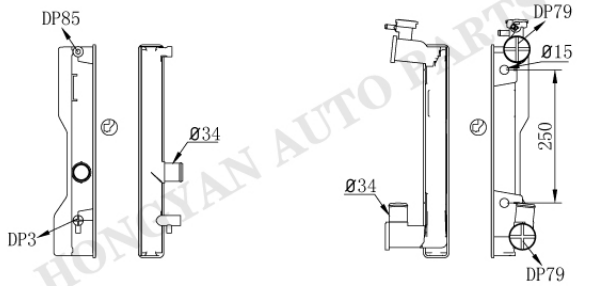

TO-0352AT/MT

Tank size :(R9×4.5×5×48×400)
OEM :1641022180/170
DPI :13049
NISSENS :
APPLICATION :
09-11 TOYOTA COROLLA 2.4L
09-13 TOYOTA MATRIX 2.4L
09-10 PONTIAC VIBE 2.4L

TO-0351

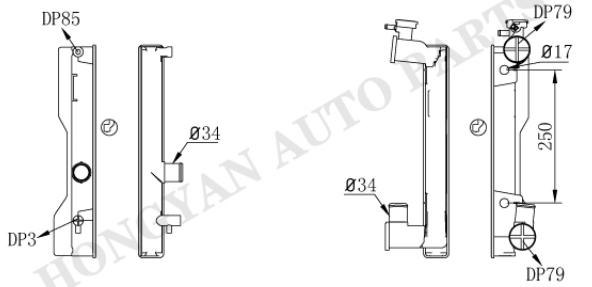

TO-0352-1AT

Tank size :(R9×4.5×5×48×400)
OEM :
DPI :
NISSENS :
APPLICATION :
09-11 TOYOTA COROLLA 2.4L
09-13 TOYOTA MATRIX 2.4L
09-10 PONTIAC VIBE 2.4L

TO-0351

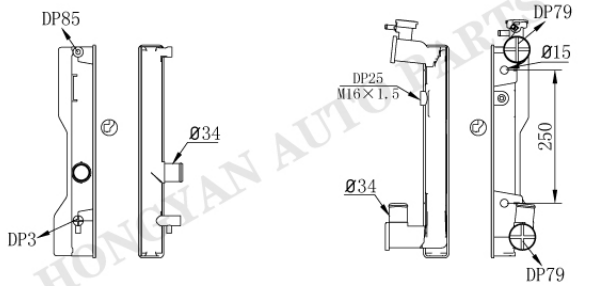

TO-0353AT/MT

Tank size :(R9×4.5×5×48×400)
OEM :
DPI :
NISSENS :
APPLICATION :
09-11 TOYOTA COROLLA 2.4L
09-13 TOYOTA MATRIX 2.4L
09-10 PONTIAC VIBE 2.4L

TO-0351

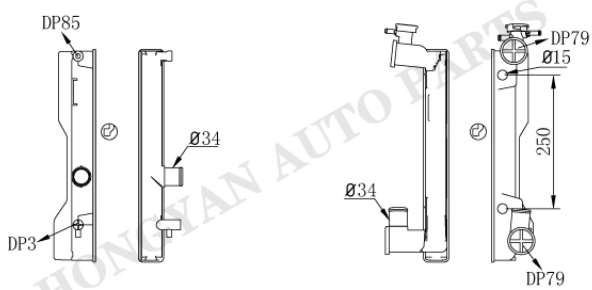

TO-0354AT/MT

Tank size :(R9×4.5×5×48×400)
OEM :
DPI :
NISSENS :
APPLICATION :
09-11 TOYOTA COROLLA 2.4L
09-13 TOYOTA MATRIX 2.4L
09-10 PONTIAC VIBE 2.4L

TOYOTA/LEXUS/HINO/SCION

TO-0355

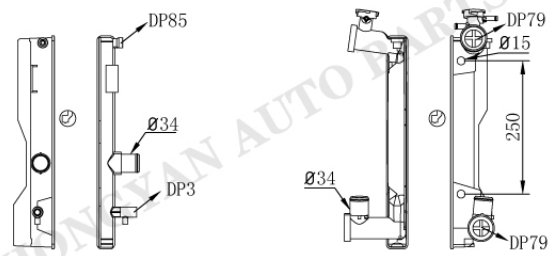

Tank size :(R9×4×5×33/40×400)
OEM :164000D420
DPI :13106 13153
NISSENS :
APPLICATION :
09-11 TOYOTA COROLLA 1.8L
09-13 TOYOTA MATRIX 1.8L
09-10 PONTIAC VIBE 1.8L

TO-0356AT/MT

TO-0355

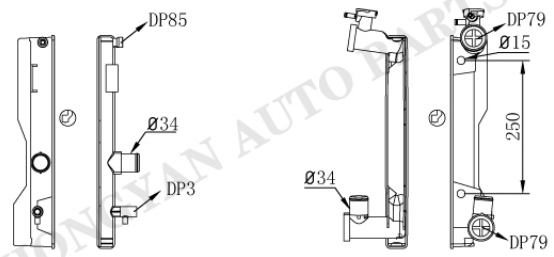

Tank size :(R9×4×5×33/40×400)
OEM :
DPI :
NISSENS :
APPLICATION :
09-11 TOYOTA COROLLA 1.8L
09-13 TOYOTA MATRIX 1.8L
09-10 PONTIAC VIBE 1.8L

TO-0357AT/MT

TO-0358

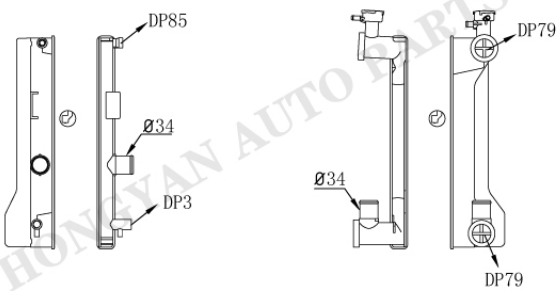

Tank size :(R9×4×5×33×400)
OEM :1641021180
DPI :
NISSENS :
APPLICATION :
06- TOYOTA COROLLA

TO-0359

TO-0360

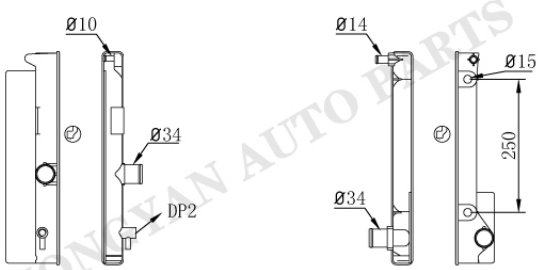

Tank size :(R9×4×5×40×400)
OEM :164000D400
DPI :
NISSENS :64692
APPLICATION :
07- TOYOTA COROLLA 1.6L
08- TOYOTA AURIS 1.4/1.6L
08- TOYOTA AVENSIS 1.8/2.0L
08- TOYOTA VERSO 1.8L

TO-0361AT/MT

HONGYAN AUTO PARTS

TOYOTA/LEXUS/HINO/SCION

TO-0362

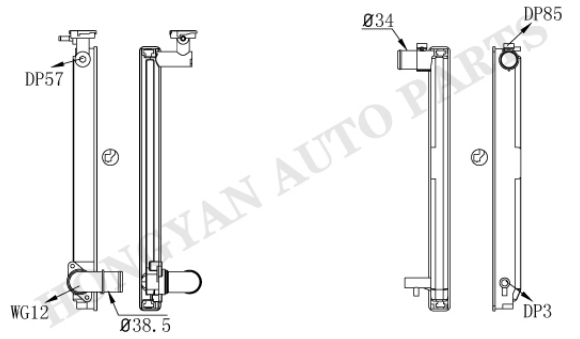

TO-0363

Tank size :(R9×4×5×40×496)
OEM :1604120351/2/3
DPI :
NISSENS :
APPLICATION :
06-08 LEXUS RX400H 3.3L
06-07 TOYOTA HIGHLANDER 3.3L

TO-0364

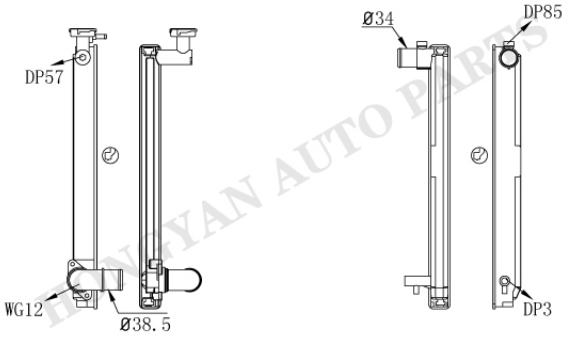

TO-0363

Tank size :(R9×4×5×40×496)
OEM :1604120351/2/3
DPI :2929
NISSENS :
APPLICATION :
06-08 LEXUS RX400H 3.3L
06-07 TOYOTA HIGHLANDER 3.3L

TO-0365AT/MT

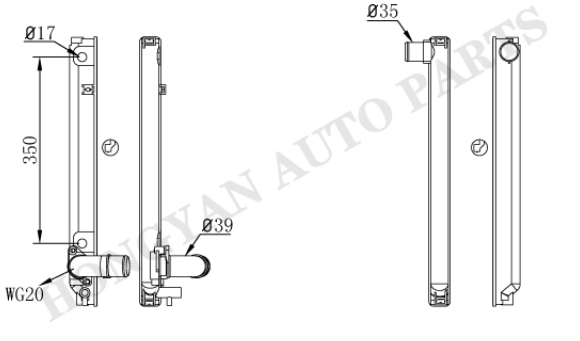

TO-0366

Tank size :(R9×4×5.2×39.8×506)
OEM :160410A380
DPI :2925
NISSENS :
APPLICATION :
05-06 TOYOTA SIENNA 3.3L

TO-0367AT/MT

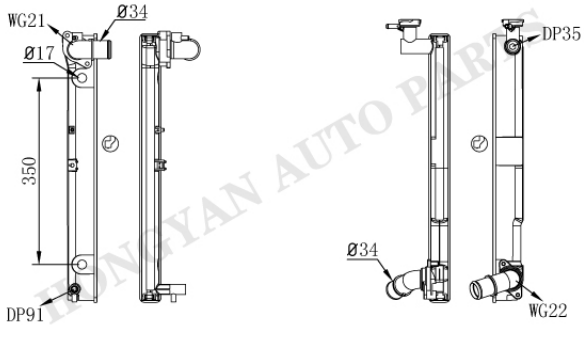

TO-0368

Tank size :(R9×4×5×400×505)
OEM :
DPI :
NISSENS :
APPLICATION :
TOYOTA HARRIER
LEXUS RX 300/330

TOYOTA/LEXUS/HINO/SCION

TO-0369

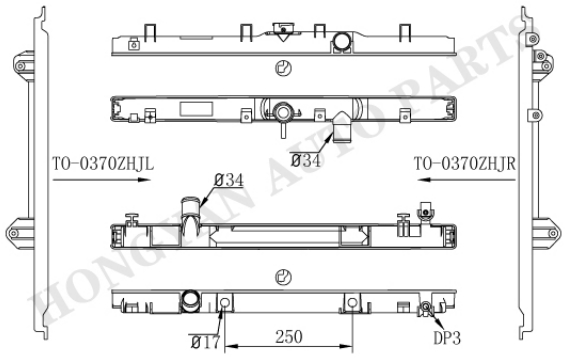

TO-0370AT/MT

Tank size :(R8×4×5×48×678)
OEM :1640075441
DPI :13251
NISSENS :646825
APPLICATION :
10-14 TOYOTA 4RUNNER 4.0L

TO-0371

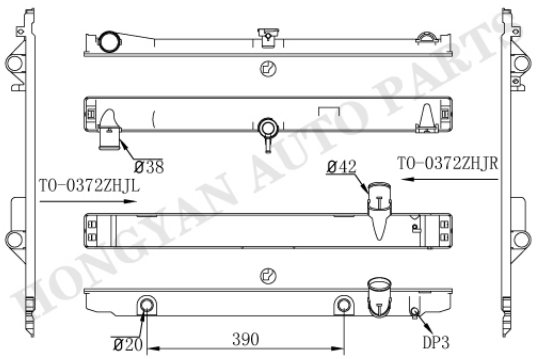

TO-0372AT/MT

Tank size :(R9.5×4.5×5×69×728)
OEM :1640050380/31600
DPI :13080
NISSENS :646827
APPLICATION :
08-14 TOYOTA LAND CRUISER 5.7L
08-14 LEXUS LX570 5.7L

TO-0373

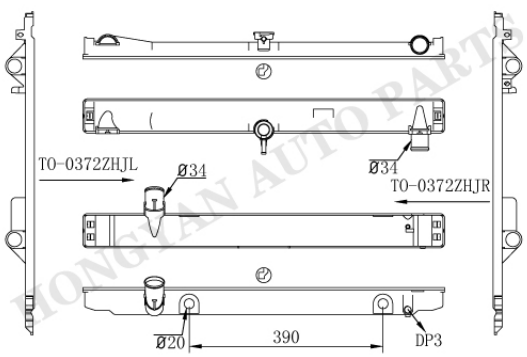

TO-0374AT/MT

Tank size :(R9.5×4.5×5×69×728)
OEM :
DPI :
NISSENS :
APPLICATION :
08-14 TOYOTA LAND CRUISER 5.7L
08-14 LEXUS LX570 5.7L

TO-0375

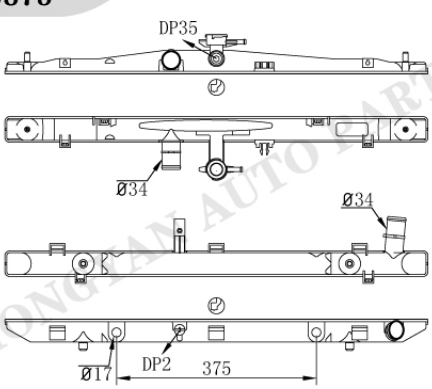

TO-0376AT/MT

Tank size :(R9×4×5×48×794)
OEM :160410P210 1604131610
DPI :13116
NISSENS :
APPLICATION :
11-14 TOYOTA SIENNA 2.7/3.5L

TO-66

TOYOTA/LEXUS/HINO/SCION

TO-0377

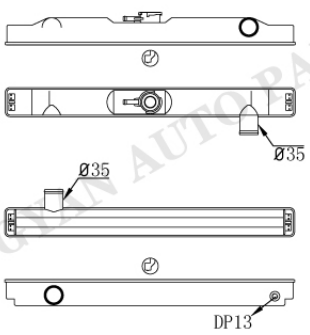

TO-0378

Tank size :(R9×4×5×54.5×544)
OEM :1640035370
DPI :
NISSENS :
APPLICATION :
89-97 TOYOTA HILUX

TO-0379

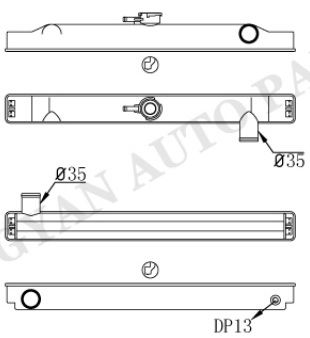

TO-0380

Tank size :(R9×4×5×54.5×544)
OEM :
DPI :
NISSENS :
APPLICATION :
89-97 TOYOTA HILUX

TO-0381

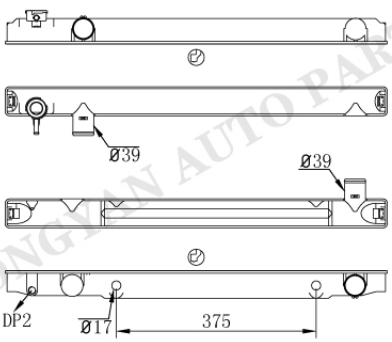

TO-0382AT/MT

Tank size :(R8×4×5×54.5×717)
OEM :164000F030
DPI :2321 2376
NISSENS :
APPLICATION :
00-06 TOYOTA TUNDRA 4.7L
00-06 TOYOTA SEQUOIA 4.7L

TO-0383

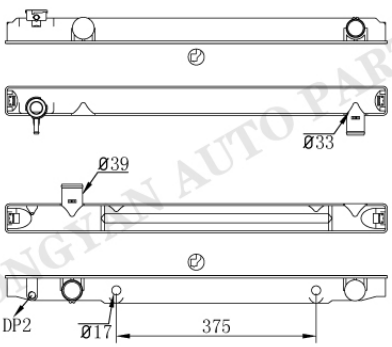

TO-0384AT/MT

Tank size :(R8×4×5×54.5×717)
OEM :1641007070/90
DPI :2320
NISSENS :69462
APPLICATION :
00-06 TOYOTA TUNDRA 3.4/4.0L

TOYOTA/LEXUS/HINO/SCION

TO-0385

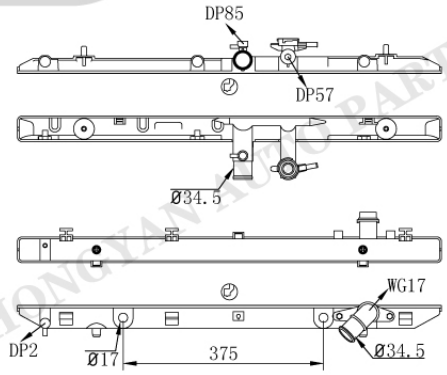

TO-0386AT/MT

Tank size :(R8.5×4×4.5×48×796)
OEM :1604136050/60
DPI :13122 13123
NISSENS :
APPLICATION :
09-13 TOYOTA HINGLANDER 2.7L

TO-0385

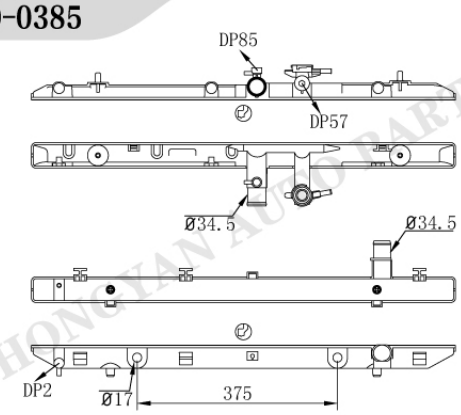

TO-0387AT/MT

Tank size :(R8.5×4×4.5×48×796)
OEM :1604131540/50
DPI :13024
NISSENS :
APPLICATION :
08-13 TOYOTA HINGLANDER 3.5L

TO-0388

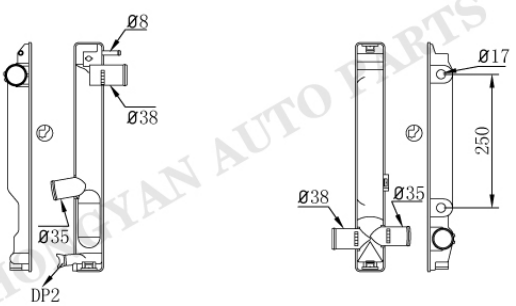

TO-0389AT/MT

Tank size :(R9×4×5×55×429)
OEM :1640067160
DPI :
NISSENS :
APPLICATION :
96-99 TOYOTA HIACE

TO-0390AT/MT

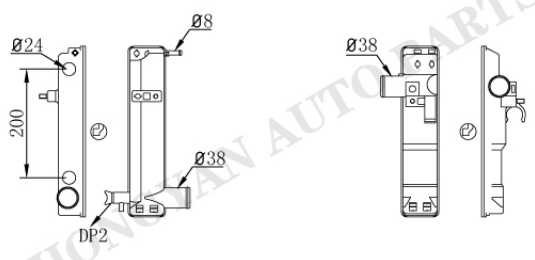

TO-0391

Tank size :(R9.5×5×4.5×69×314)
OEM :1640013670
DPI :
NISSENS :
APPLICATION :
99- TOYOTA TOWNACE

HONGYAN AUTO PARTS

TOYOTA/LEXUS/HINO/SCION

TO-0392

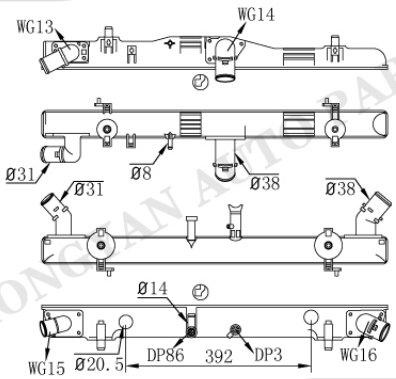

TO-0393AT/MT

Tank size :(R10×4.5×4.5×54×675)
OEM :1640030160/70
DPI :
NISSENS :
APPLICATION :
HIACE(DIESEL)

TO-0394

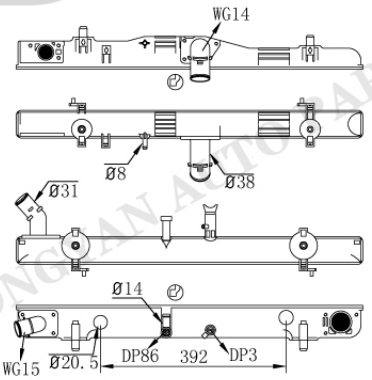

TO-0395AT/MT

Tank size :(R10×4.5×4.5×54×675)
OEM :1640075470
DPI :
NISSENS :
APPLICATION :
HIACE(GAS)

TO-0392

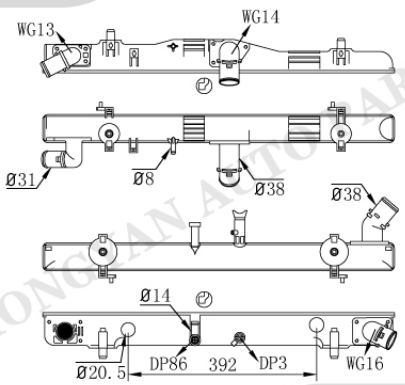

TO-0396AT/MT

Tank size :(R10×4.5×4.5×54×675)
OEM :
DPI :
NISSENS :
APPLICATION :

TO-0397

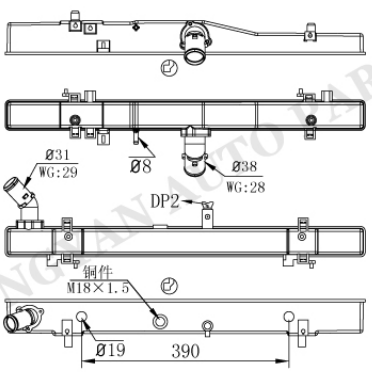

TO-0398AT/MT

Tank size :(R9×5×5×57×677)
OEM :1640075480
DPI :
NISSENS :
APPLICATION :
HIACE

TOYOTA/LEXUS/HINO/SCION

TO-0397

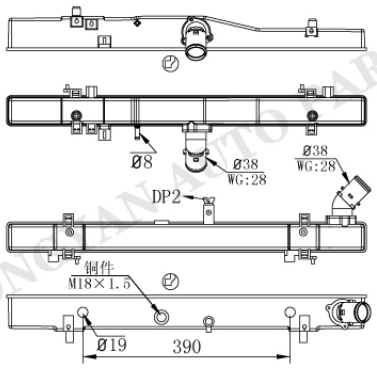

TO-0399AT/MT

Tank size :(R9×5×5×57×677)
OEM :1640030160
DPI :
NISSENS :
APPLICATION :
HIACE

TO-0400

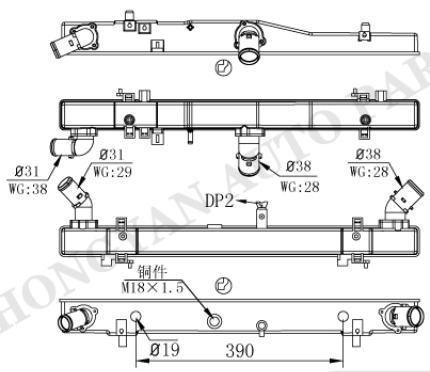

TO-0401AT/MT

Tank size :(R9×5×5×57×677)
OEM :1640030160
DPI :
NISSENS :
APPLICATION :
HIACE

TO-0402

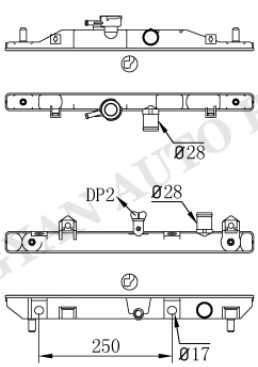

TO-0403AT/MT

Tank size :(R9×4×5×33/40×467)
OEM :16400BZ020
DPI :
NISSENS :
APPLICATION :
03- TOYOTA VENZA

TO-0404

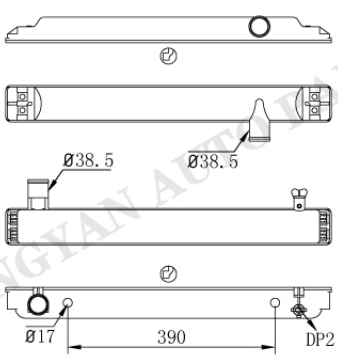

TO-0405AT/MT

Tank size :(R9.5×4.5×4.5×68.8×612)
OEM :
DPI :
NISSENS :
APPLICATION :
97-99 TOYOTA DYNA

TOYOTA/LEXUS/HINO/SCION

TO-0406

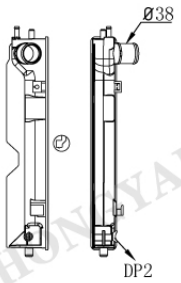

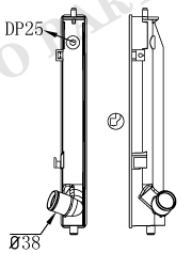

TO-0407

Tank size :(R9×4×5×48×400)
OEM :164000G020/30
DPI :
NISSENS :64647A
APPLICATION :
01- TOYOTA COROLLA 2.0L(DIESEL)
03- TOYOTA AVENSIS 2.0L(DIESEL)

TO-0408

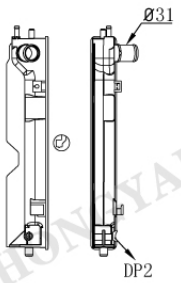

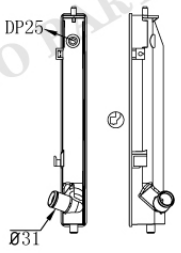

TO-0409

Tank size :(R9×4×5×48×400)
OEM :164000N030/1
DPI :
NISSENS :64679A
APPLICATION :
01- TOYOTA COROLLA 1.4L(DIESEL)

TO-0410

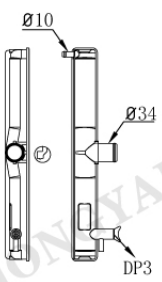

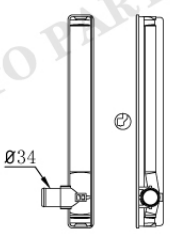

TO-0411

Tank size :(R9×4×5×48×400)
OEM :164000N060
DPI :
NISSENS :64691
APPLICATION :
07- TOYOTA COROLLA 1.4L(DIESEL)
07- TOYOTA AURIS 1.4L(DIESEL)

TO-0412

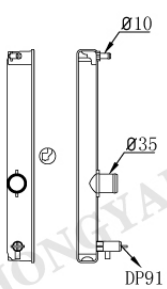

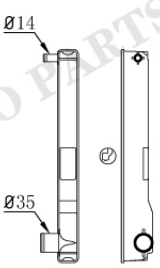

TO-0413

Tank size :(R9×4×5×40×400)
OEM :1640037230
DPI :13119
NISSENS :
APPLICATION :
10-14 TOYOTA PTIUS 1.8L
11-13 LEXUS CT200H 1.8L

HONGYAN AUTO PARTS

TOYOTA/LEXUS/HINO/SCION

TO-0414

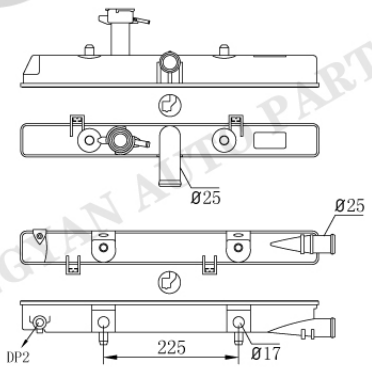

Tank size :(R9×4×5×48×429)
OEM :16400B5120/30/50
DPI :
NISSENS :
APPLICATION :

TO-0415AT/MT

TO-0416

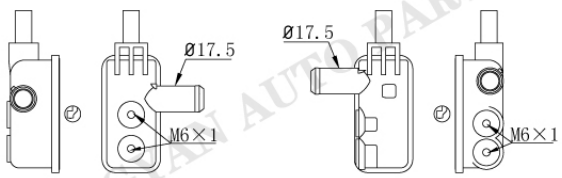

Tank size :(R9×4×5.2×39.5×79.3)
OEM :G901047030
DPI :13124
NISSENS :
APPLICATION :
10-14 TOYOTA PRIUS 1.8L

TO-0417

TO-0418

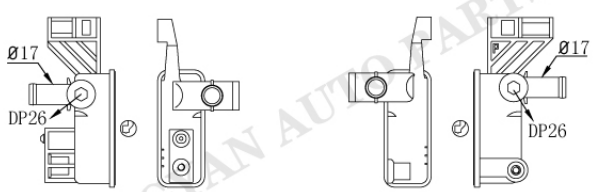

Tank size :(R9×4×5×39.5×98.3)
OEM :
DPI :
NISSENS :
APPLICATION :
13- TOYOTA CAMRY

TO-0419

TO-0420

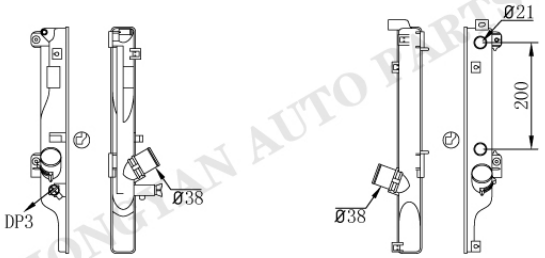

Tank size :(R8.5×4.3×5×45.5×425)
OEM :
DPI :
NISSENS :
APPLICATION :
06- TOYOTA RAV4

TO-0421AT/MT

TO-72

TOYOTA/LEXUS/HINO/SCION

TO-0422

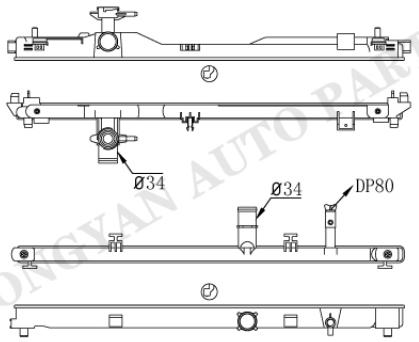

TO-0423

Tank size :(R9×4×5×31×733)
OEM :
DPI :
NISSENS :
APPLICATION :

TO-0424AT/MT

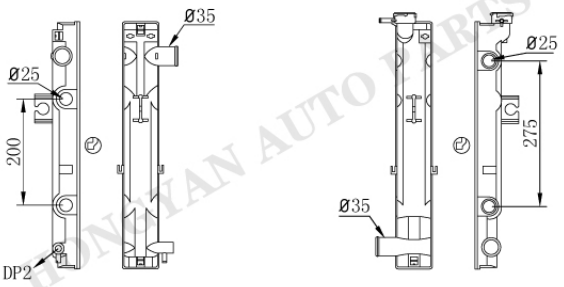

TO-0425AT/MT

Tank size :(R9×4.5×4.5×68.5×465)
OEM :
DPI :
NISSENS :
APPLICATION :

TO-0426AT/MT

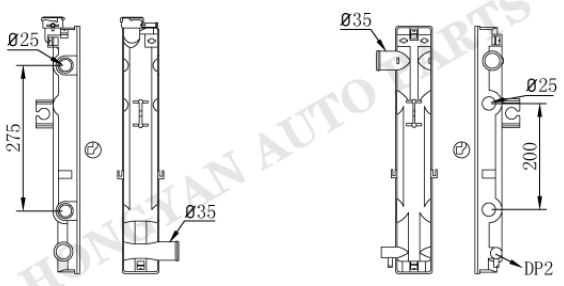

TO-0427AT/MT

Tank size :(R9×4.5×4.5×68.5×465)
OEM :
DPI :
NISSENS :
APPLICATION :

TO-0428

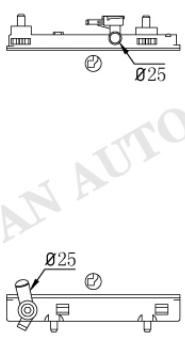

TO-0429

Tank size :(R9×4.4×4.8×34.5×326)
OEM :
DPI :
NISSENS :
APPLICATION :

HONGYAN AUTO PARTS

TOYOTA/LEXUS/HINO/SCION

TO-0428-1

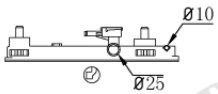

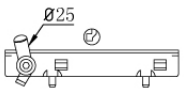

TO-0429

Tank size :(R9×4.4×4.8×34.5×326)
OEM :
DPI :
NISSENS :
APPLICATION :

TO-0430AT/MT

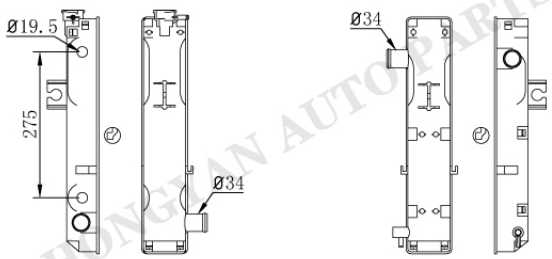

TO-0431

Tank size :(R9×4.5×4.5×85×445)
OEM :
DPI :
NISSENS :
APPLICATION :

TO-0432

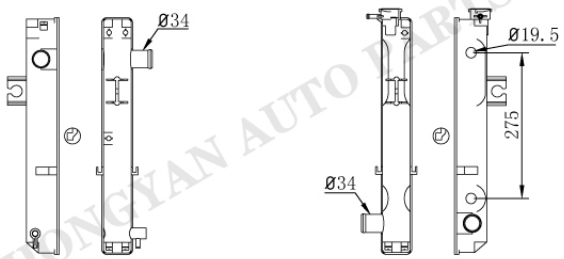

TO-0433AT/MT

Tank size :(R9.5×4.5×5×58×445)
OEM :
DPI :
NISSENS :
APPLICATION :

TO-0434AT/MT

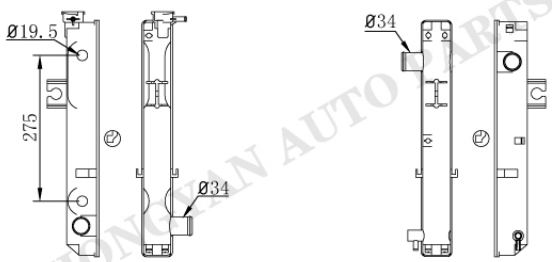

TO-0435

Tank size :(R9.5×4.5×5×58×445)
OEM :
DPI :
NISSENS :
APPLICATION :

HONGYAN AUTO PARTS

TOYOTA/LEXUS/HINO/SCION

TO-0436AT/MT

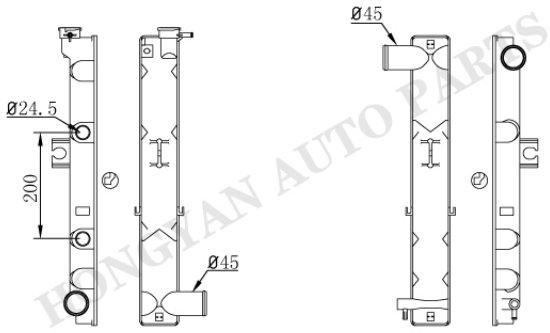

TO-0437

Tank size :(R9.5×4.5×5×74×544)
OEM :
DPI :
NISSENS :
APPLICATION :

TO-0438

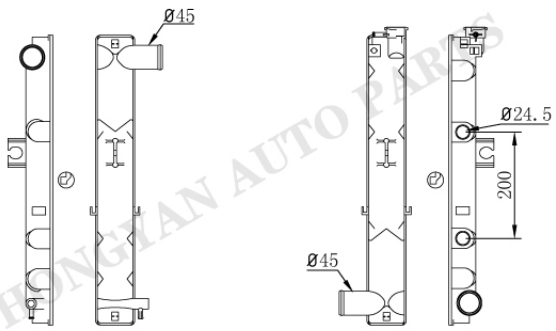

TO-0439AT/MT

Tank size :(R9.5×4.5×5×74×544)
OEM :
DPI :
NISSENS :
APPLICATION :

TO-0440AT/MT

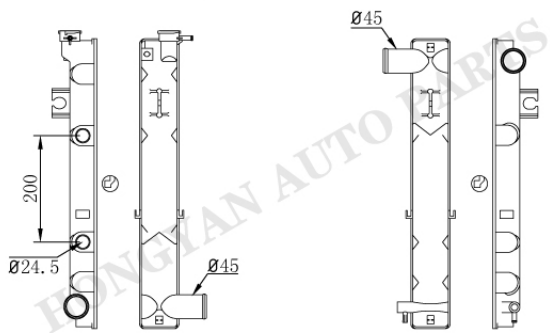

TO-0441

Tank size :(R9.5×4.5×5×74×544)
OEM :
DPI :
NISSENS :
APPLICATION :

TO-0442

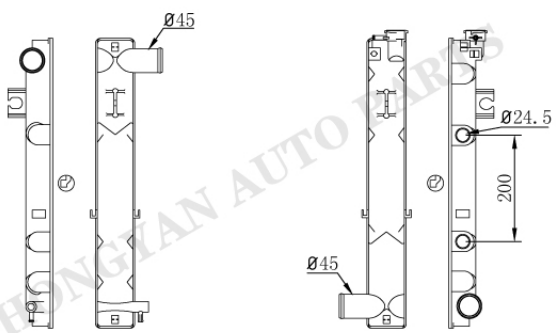

TO-0443AT/MT

Tank size :(R9.5×4.5×5×74×544)
OEM :
DPI :
NISSENS :
APPLICATION :

HONGYAN AUTO PARTS

TOYOTA/LEXUS/HINO/SCION

TO-0444

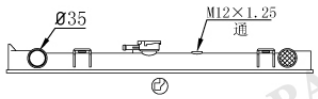

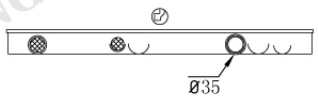

TO-0445

Tank size :(R9.5×4.5×5×49.5×577)
OEM :
DPI :
NISSENS :
APPLICATION :

TO-0446

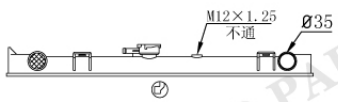

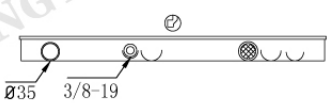

TO-0447

Tank size :(R9.5×4.5×5×49.5×577)
OEM :
DPI :
NISSENS :
APPLICATION :

TO-0448

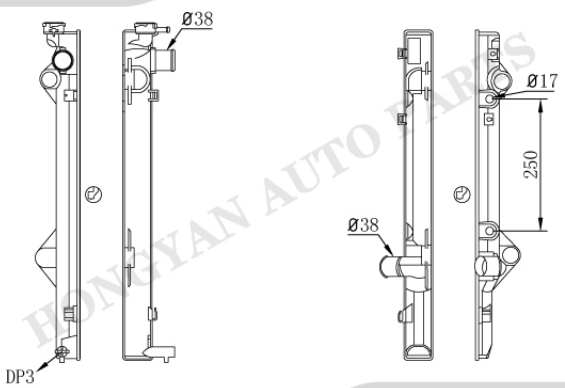

TO-0449AT/MT

Tank size :(R9×4×5×54.5×621)
OEM :
DPI :2690
NISSENS :
APPLICATION :
03-09 TOYOTA 4RUNNER 4.7L
03-09 LEXUS GX470 4.7L

TO-0379

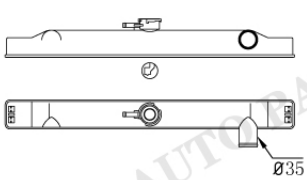

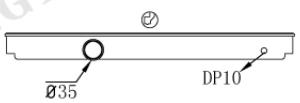

TO-0450

Tank size :(R9×4×5×54.5×544)
OEM :
DPI :
NISSENS :
APPLICATION :

HONGYAN AUTO PARTS

TOYOTA/LEXUS/HINO/SCION

TO-0451

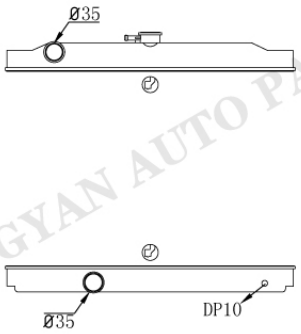

TO-0452

Tank size :(R9×4×5×54.5×544)
OEM :
DPI :
NISSENS :
APPLICATION :

TO-0453

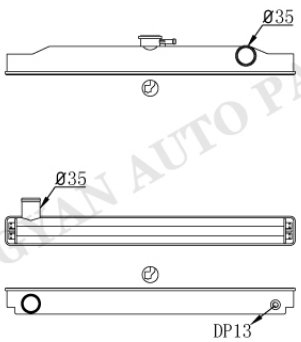

TO-0380

Tank size :(R9×4×5×54.5×544)
OEM :
DPI :
NISSENS :
APPLICATION :

TO-0454

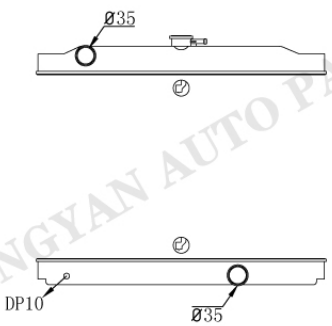

TO-0455

Tank size :(R9×4×5×54.5×544)
OEM :
DPI :
NISSENS :
APPLICATION :

TO-0456

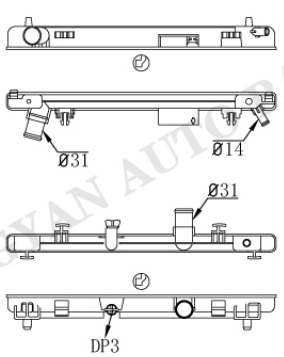

TO-0457

Tank size :(R9×4×5×33×506)
OEM :
DPI :
NISSENS :
APPLICATION :

HONGYAN AUTO PARTS

TOYOTA/LEXUS/HINO/SCION

TO-0458



TO-0459

Tank size :(R9×5×5×60×405)
OEM :
DPI :
NISSENS :
APPLICATION :

TO-0460



TO-0461

Tank size :(R9×5×5×60×405)
OEM :
DPI :
NISSENS :
APPLICATION :

TO-0462

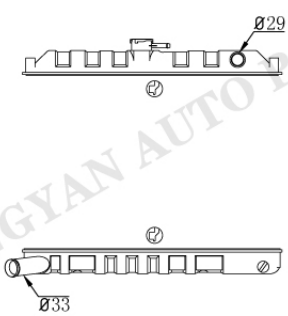

TO-0463

Tank size :(R9×4×6×44.5×487.5)
OEM :
DPI :
NISSENS :
APPLICATION :
TOYOTA HAICE(JINBEI)

TO-0462

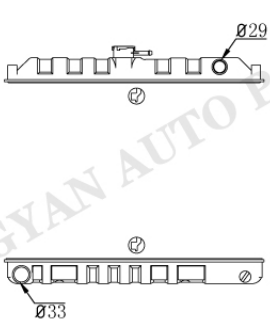

TO-0464

Tank size :(R9×4×6×44.5×487.5)
OEM :
DPI :
NISSENS :
APPLICATION :
TOYOTA HAICE(JINBEI)

HONGYAN AUTO PARTS

TOYOTA/LEXUS/HINO/SCION

TO-0465

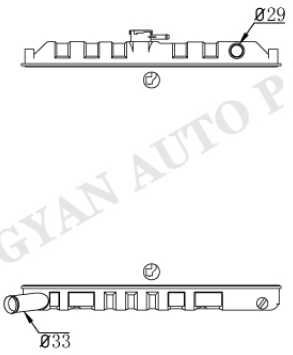

TO-0466

Tank size :(R9×4×6×44.5×487.5)
OEM :
DPI :
NISSENS :
APPLICATION :

TO-0465

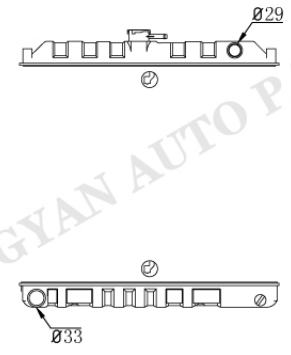

TO-0467

Tank size :(R9×4×6×44.5×487.5)
OEM :
DPI :
NISSENS :
APPLICATION :

TO-0468



TO-0469

Tank size :(R9.5×4×5×33/40×400)
OEM :
DPI :
NISSENS :
APPLICATION :
08- TOYOTA COROLLA

TO-0470

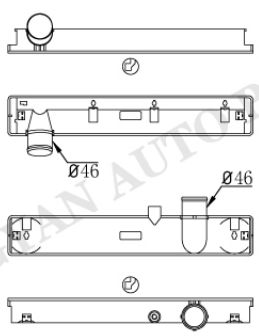

TO-0471

Tank size :(R8.5×5×4.5×70×460)
OEM :
DPI :
NISSENS :
APPLICATION :
TOYOTA DYNA

HONGYAN AUTO PARTS

TOYOTA/LEXUS/HINO/SCION

TO-0472

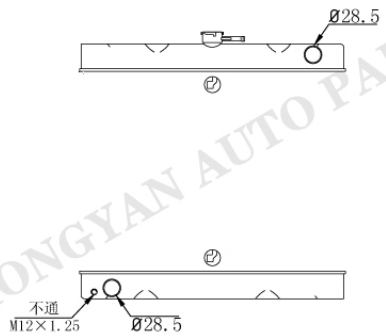

Tank size :(R8.5×4×4.5×52×499)
OEM :
DPI :
NISSENS :
APPLICATION :
TOYOTA SURF

TO-0473

TO-0472

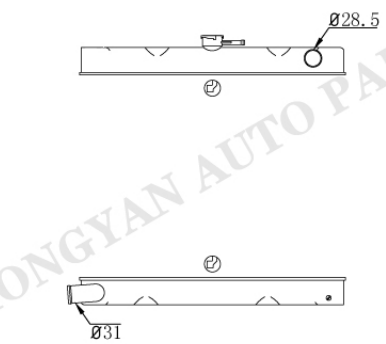

Tank size :(R8.5×4×4.5×52×499)
OEM :
DPI :
NISSENS :
APPLICATION :
TOYOTA SURF

TO-0474

TO-0472

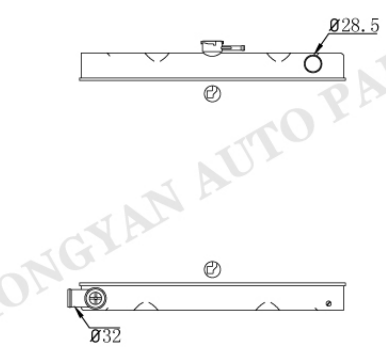

Tank size :(R8.5×4×4.5×52×499)
OEM :
DPI :
NISSENS :
APPLICATION :
TOYOTA SURF

TO-0475

TO-0476

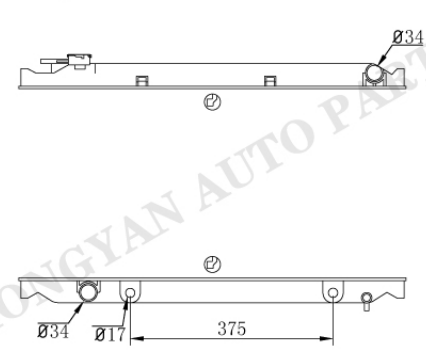

Tank size :(R9.5×4.5×5×50×727)
OEM :
DPI :
NISSENS :
APPLICATION :
TOYOTA LANDCRUISER

TO-0477AT/MT

HONGYAN AUTO PARTS

TOYOTA/LEXUS/HINO/SCION

TO-0478

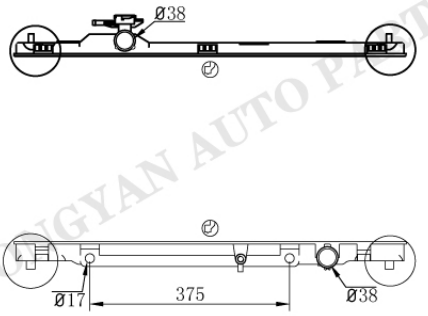

TO-0479AT/MT

Tank size :(R9×4×5×48×736)
OEM :1640050320
DPI :2781
NISSENS :
APPLICATION :
06-07 LEXUS GS430 4.3L

TO-0480

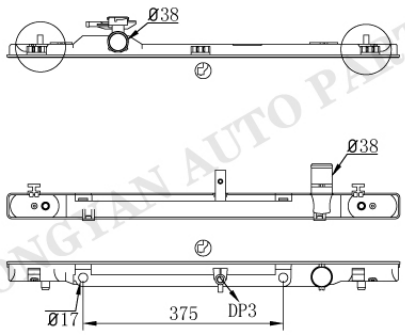

TO-0344AT/MT

Tank size :(R9×4×5×48×736)
OEM :1640050330
DPI :
NISSENS :
APPLICATION :

TO-0104

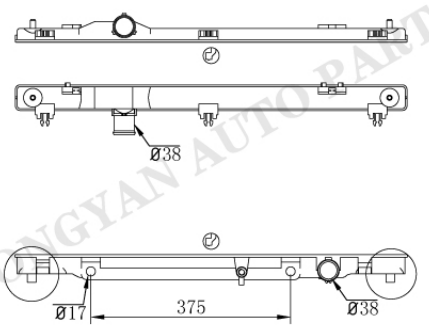

TO-0479AT/MT

Tank size :(R9×4×5×48×736)
OEM :
DPI :
NISSENS :
APPLICATION :

TO-0481

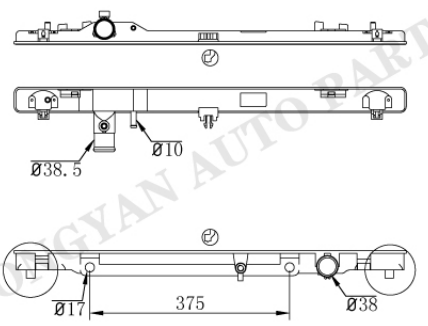

TO-0479AT/MT

Tank size :(R9×4×5×48×736)
OEM :1640038170
DPI :13018
NISSENS :
APPLICATION :
09-14 LEXUS LS460 4.6L

HONGYAN AUTO PARTS

TOYOTA/LEXUS/HINO/SCION

TO-0482

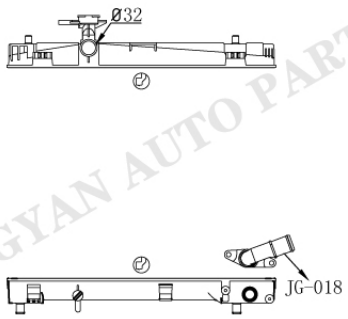

Tank size :(R9×4×5×33×505.5)
OEM :
DPI :
NISSENS :
APPLICATION :
10- TOYOTA YARIS

TO-0483

TO-0484

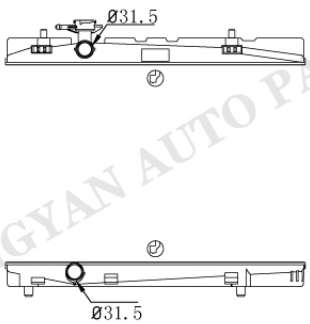

Tank size :(R9×4×5×33×563)
OEM :164000Y400
DPI :
NISSENS :
APPLICATION :
12- TOYOTA YARIS

TO-0485

TO-0486



Tank size :(R6×5×5×48×294.4)
OEM :
DPI :
NISSENS :
APPLICATION :
TOYOTA HIACE

TO-0487

TO-0488

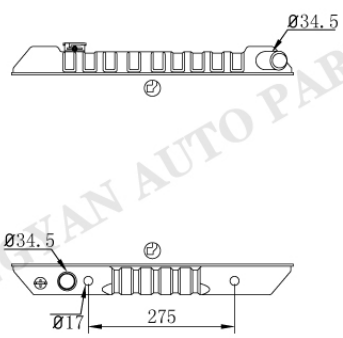

Tank size :(R8×5×4.5×65×529)
OEM :
DPI :1190
NISSENS :
APPLICATION :
88-95 TOYOTA 4RUNNER
88-95 TOYOTA PICKUP

TO-0489AT/MT

HONGYAN AUTO PARTS

TOYOTA/LEXUS/HINO/SCION

TO-0488

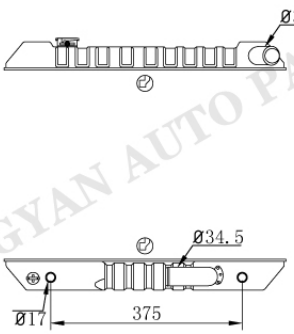

TO-0490AT/MT

Tank size :(R8×5×4.5×65×529)
OEM :
DPI :
NISSENS :
APPLICATION :
88-95 TOYOTA 4RUNNER
88-95 TOYOTA PICKUP

TO-0491

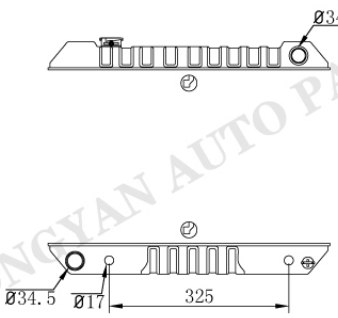

TO-0492AT/MT

Tank size :(R8×5×4.5×65×529)
OEM :
DPI :
NISSENS :
APPLICATION :
88-95 TOYOTA 4RUNNER
88-95 TOYOTA PICKUP

TO-0488

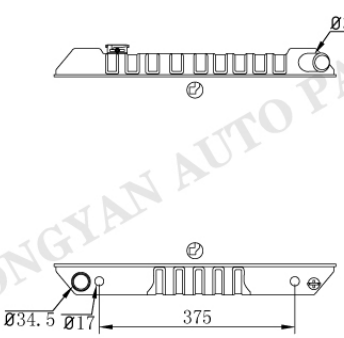

TO-0493AT/MT

Tank size :(R8×5×4.5×65×529)
OEM :
DPI :50
NISSENS :
APPLICATION :
88-95 TOYOTA 4RUNNER
88-95 TOYOTA PICKUP

TO-0494

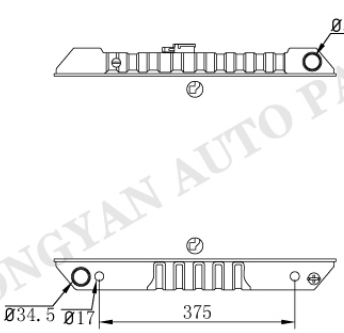

TO-0495AT/MT

Tank size :(R8×5×4.5×65×529)
OEM :
DPI :147
NISSENS :
APPLICATION :
88-95 TOYOTA 4RUNNER
88-95 TOYOTA PICKUP

HONGYAN AUTO PARTS

TOYOTA/LEXUS/HINO/SCION

TO-0496

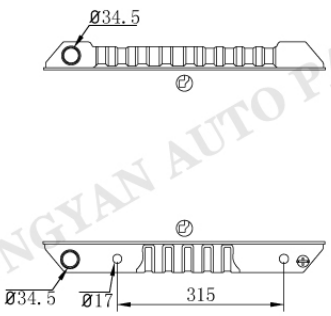

Tank size :(R8×5×4.5×65×529)
OEM :
DPI :
NISSENS :
APPLICATION :
88-95 TOYOTA 4RUNNER
88-95 TOYOTA PICKUP

TO-0497AT/MT

TO-0498

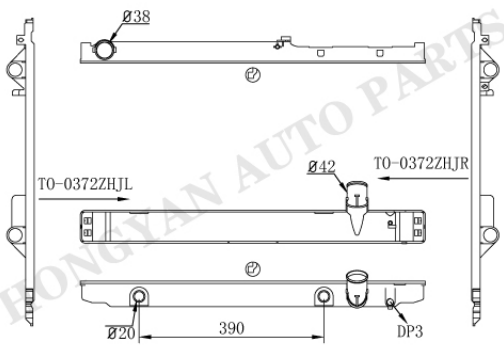

Tank size :(R9.5×4.5×5×69×728)
OEM :
DPI :
NISSENS :
APPLICATION :
08-14 TOYOTA LAND CRUISER 5.7L
08-14 LEXUS LX570 5.7L

TO-0372AT/MT

TO-0499

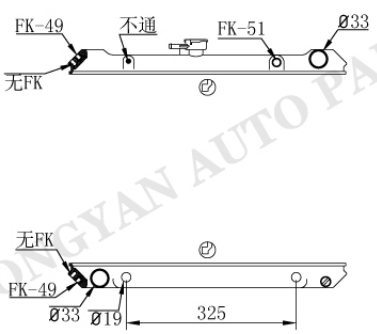

Tank size :(R6×5.5×5×56×519)
OEM :
DPI :661
NISSENS :
APPLICATION :
79-82 TOYOTA CORONA 2.2/2.4L
79-82 TOYOTA CELICA 2.2/2.4L

TO-0500AT/MT

TO-0501

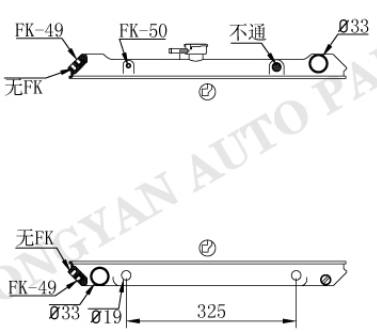

Tank size :(R6×5.5×5×56×519)
OEM :
DPI :
NISSENS :
APPLICATION :
79-82 TOYOTA CORONA 2.2/2.4L
79-82 TOYOTA CELICA 2.2/2.4L

TO-0500AT/MT

HONGYAN AUTO PARTS

TOYOTA/LEXUS/HINO/SCION

TO-0502

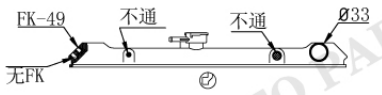

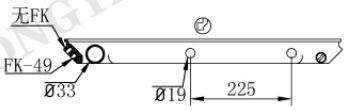

TO-0503AT/MT

Tank size :(R6×5.5×5×56×519)
OEM :
DPI :
NISSENS :
APPLICATION :
79-82 TOYOTA CORONA 2.2/2.4L
79-82 TOYOTA CELICA 2.2/2.4L

TO-0504

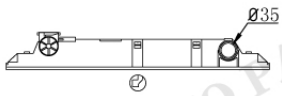



TO-0505

Tank size :(R9×5×5×69×494)
OEM :
DPI :
NISSENS :
APPLICATION :
TOYOTA DYNA

TO-0506

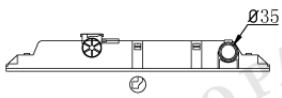

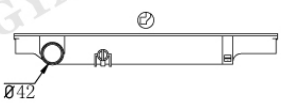

TO-0505

Tank size :(R9×5×5×69×494)
OEM :
DPI :
NISSENS :
APPLICATION :
TOYOTA DYNA

TO-0507

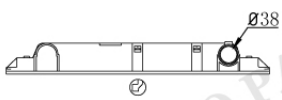

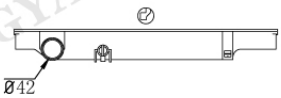

TO-0505

Tank size :(R9×5×5×69×494)
OEM :
DPI :
NISSENS :
APPLICATION :
TOYOTA DYNA

HONGYAN AUTO PARTS

TOYOTA/LEXUS/HINO/SCION

TO-0508

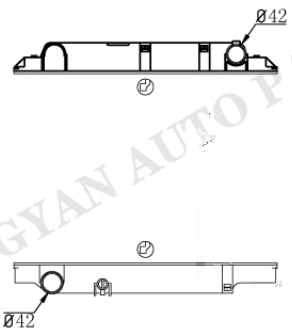

TO-0505

Tank size :(R9×5×5×69×494)
OEM :
DPI :
NISSENS :
APPLICATION :
TOYOTA DYNA

TO-0509

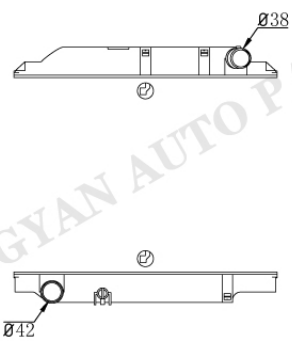

TO-0505

Tank size :(R9×5×5×69×494)
OEM :
DPI :
NISSENS :
APPLICATION :
TOYOTA DYNA

TO-0510

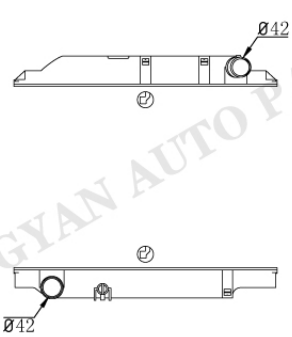

TO-0505

Tank size :(R9×5×5×69×494)
OEM :
DPI :
NISSENS :
APPLICATION :
TOYOTA DYNA

TO-0511

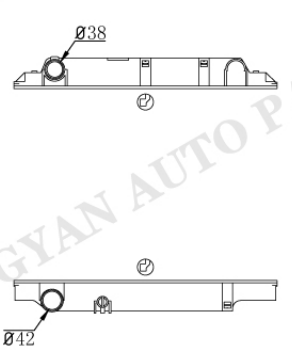

TO-0505

Tank size :(R9×5×5×69×494)
OEM :
DPI :
NISSENS :
APPLICATION :
TOYOTA DYNA

HONGYAN AUTO PARTS

TOYOTA/LEXUS/HINO/SCION

TO-0512

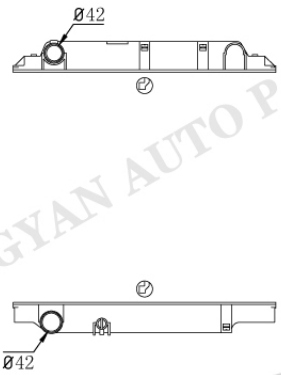

TO-0505

Tank size :(R9×5×5×69×494)
OEM :
DPI :
NISSENS :
APPLICATION :
TOYOTA DYNA

TO-0513

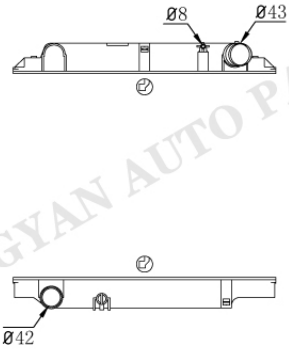

TO-0505

Tank size :(R9×5×5×69×494)
OEM :
DPI :
NISSENS :
APPLICATION :
TOYOTA DYNA

TO-0514

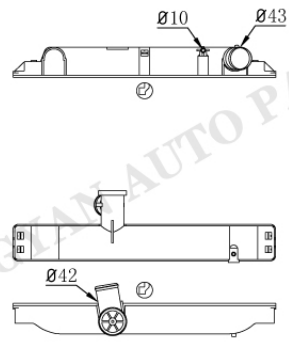

TO-0515

Tank size :(R9×5×5×69×494)
OEM :
DPI :
NISSENS :
APPLICATION :
TOYOTA DYNA

TO-0516

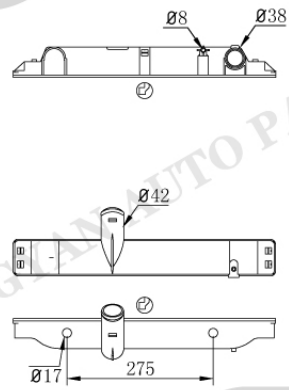

TO-0517AT/MT

Tank size :(R9×5×5×69×494)
OEM :
DPI :
NISSENS :
APPLICATION :
TOYOTA DYNA

HONGYAN AUTO PARTS

TOYOTA/LEXUS/HINO/SCION

TO-0518

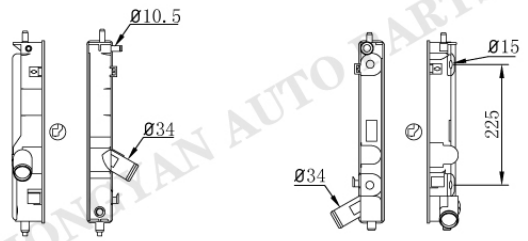

TO-0519AT/MT

Tank size :(R8.5×4×4.5×48×342)
OEM :1640022070
DPI :2335
NISSENS :
APPLICATION :
00-05 TOYOTA CELICA 1.8L

TO-0518

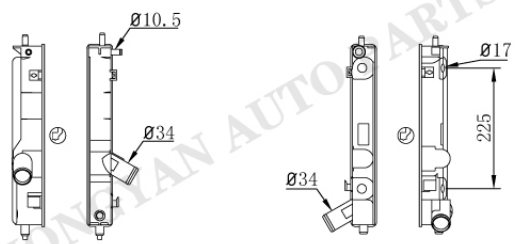

TO-0519-1AT

Tank size :(R8.5×4×4.5×48×342)
OEM :1640022070
DPI :2335
NISSENS :
APPLICATION :
00-05 TOYOTA CELICA 1.8L

TO-0520

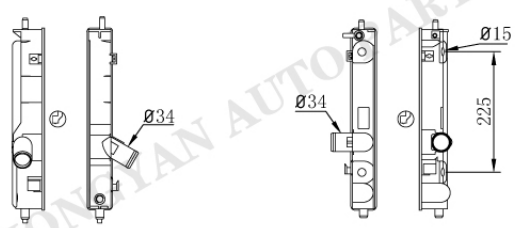

TO-0521AT/MT

Tank size :(R8.5×4×4.5×48×342)
OEM :1640022110
DPI :2358
NISSENS :
APPLICATION :
00-05 TOYOTA MR2 1.8L

TO-0520

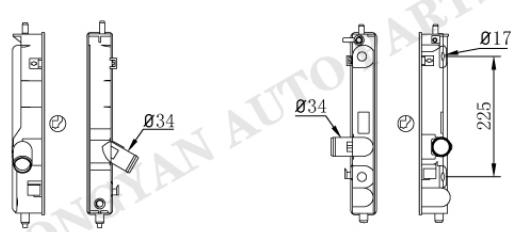

TO-0521-1AT

Tank size :(R8.5×4×4.5×48×342)
OEM :1640022110
DPI :2358
NISSENS :
APPLICATION :
00-05 TOYOTA MR2 1.8L

HONGYAN AUTO PARTS

TOYOTA/LEXUS/HINO/SCION

TO-0522

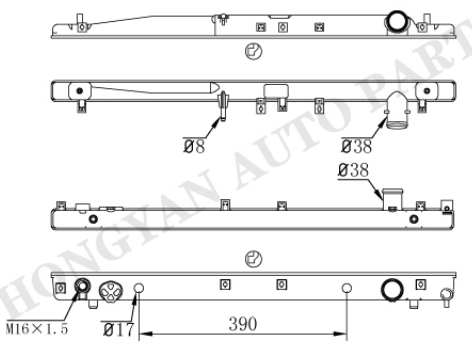

TO-0523AT/MT

Tank size :(R9×4.5×5×39.5×760)
OEM :1640027050
DPI :
NISSENS :
APPLICATION :
03- TOYOTA AVENZA

TO-0524

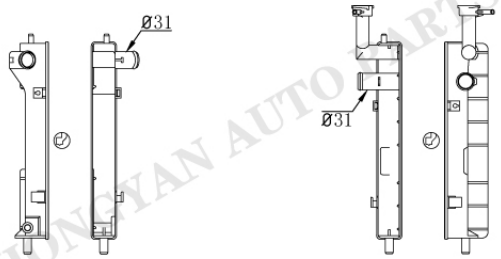

TO-0525

Tank size :(R9×4×4.5×48×371)
OEM :1640021050
DPI :2758
NISSENS :
APPLICATION :
04-09 TOYOTA PRIUS 1.5L

TO-0526

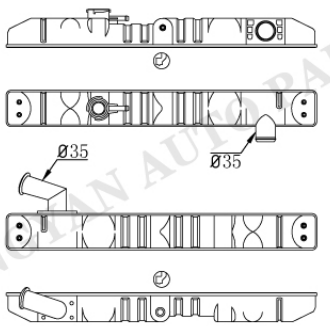

TO-0527

Tank size :(R9×4×4.5×48×583)
OEM :
DPI :
NISSENS :
APPLICATION :
TOYOTA HIACE

TO-0528

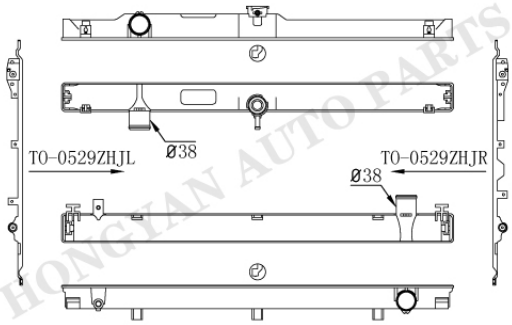

TO-0529

Tank size :(R9×4×4.5×55×736)
OEM :1640005010/0F060
DPI :2994
NISSENS :
APPLICATION :
08-13 TOYOTA SEQUOIA 4.6/5.7L
07-13 TOYOTA TUNDRA 4.6/5.7L

HONGYAN AUTO PARTS

TOYOTA/LEXUS/HINO/SCION

TO-0530

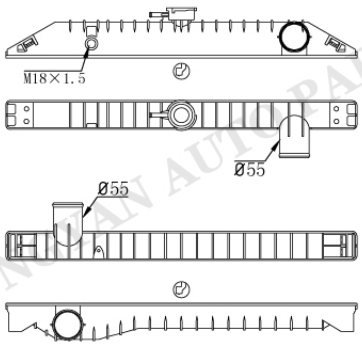

Tank size :(R9×4×4.5×54×658.8)
OEM :
DPI :
NISSENS :
APPLICATION :
99- HINO RAINBOW

TO-0531

TO-0532

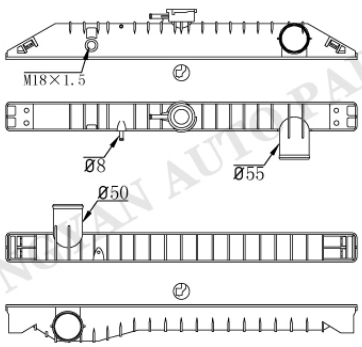

Tank size :(R9×4×4.5×54×658.8)
OEM :
DPI :
NISSENS :
APPLICATION :
99- HINO RAINBOW

TO-0533

TO-0534

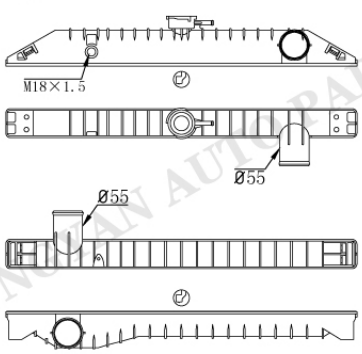

Tank size :(R9×4×4.5×54×658.8)
OEM :
DPI :
NISSENS :
APPLICATION :
99- HINO RAINBOW

TO-0531

TO-0535

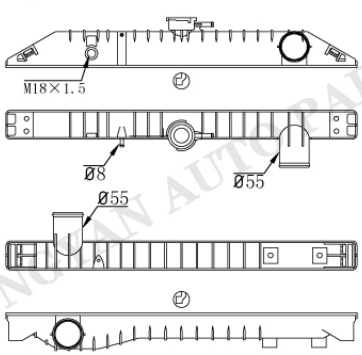

Tank size :(R9×4×4.5×54×658.8)
OEM :
DPI :
NISSENS :
APPLICATION :
99- HINO RAINBOW

TO-0536

TOYOTA/LEXUS/HINO/SCION

TO-0535

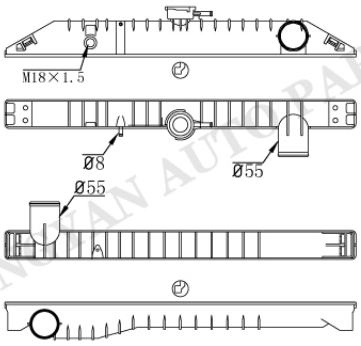

TO-0537

Tank size :(R9×4×4.5×54×658.8)
OEM :
DPI :
NISSENS :
APPLICATION :
99- HINO RAINBOW

TO-0538

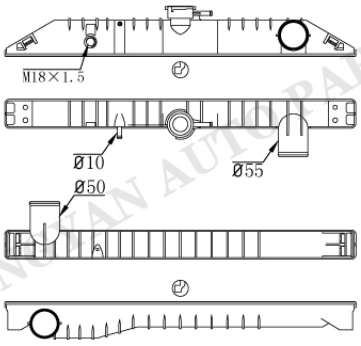

TO-0539

Tank size :(R9×4×4.5×54×658.8)
OEM :
DPI :
NISSENS :
APPLICATION :
99- HINO RAINBOW

TO-0540

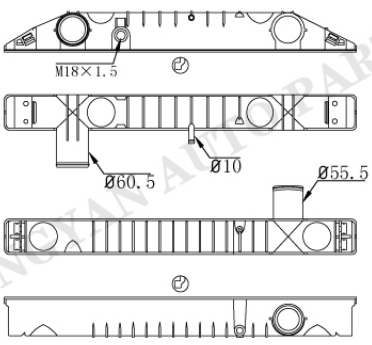

TO-0541

Tank size :(R9.5×5×4.7×66.5×661)
OEM :
DPI :
NISSENS :
APPLICATION :
HINO MEGRA

TO-0542

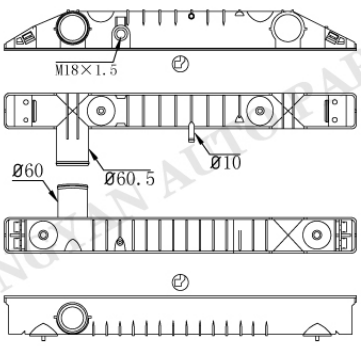

TO-0543

Tank size :(R9.5×5×4.7×66.5×661)
OEM :
DPI :
NISSENS :
APPLICATION :
HINO MEGRA

TOYOTA/LEXUS/HINO/SCION

TO-0544

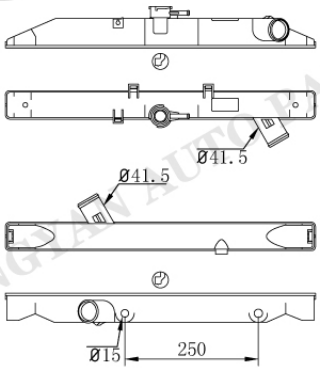

TO-0545AT/MT

Tank size :(R9×4×4.5×54×582)
OEM :
DPI :
NISSENS :
APPLICATION :
10- HINO

TO-0546

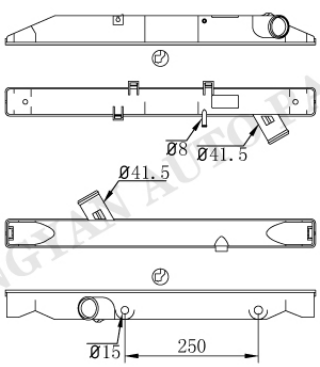

TO-0545AT/MT

Tank size :(R9×4×4.5×54×582)
OEM :
DPI :
NISSENS :
APPLICATION :
10- HINO

TO-0547

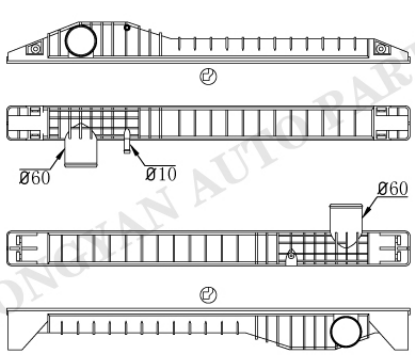

TO-0548

Tank size :(R9.5×4.5×4.5×66×757)
OEM :160815572/92/6070
DPI :
NISSENS :
APPLICATION :
94- HINO PROFIA
94- HINO TERAVIE

TO-0549

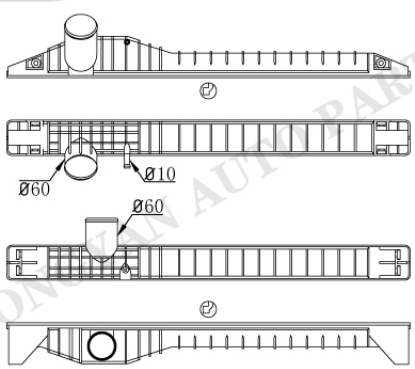

TO-0550

Tank size :(R9.5×4.5×4.5×66×757)
OEM :160816000
DPI :
NISSENS :
APPLICATION :
94- HINO PROFIA

HONGTAN AUTO PARTS

TOYOTA/LEXUS/HINO/SCION

TO-0551

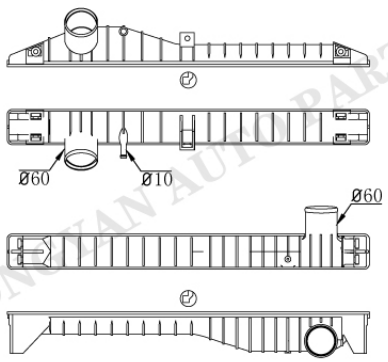

TO-0552

Tank size :(R9.5×4.5×4.5×66×680)
OEM :
DPI :
NISSENS :
APPLICATION :
HINO

TO-0553

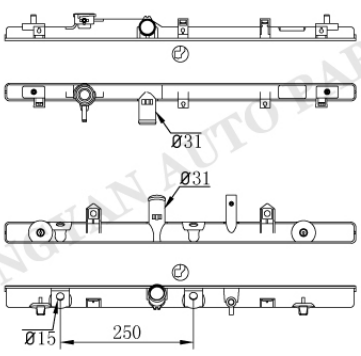

TO-0554AT/MT

Tank size :(R9×4×4.5×33/40×658.8)
OEM :
DPI :
NISSENS :
APPLICATION :
02- TOYOTA SOULUNA

TO-0555

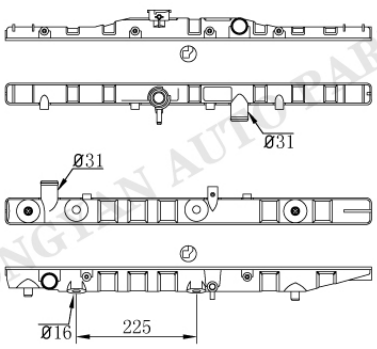

TO-0556AT/MT

Tank size :(R8.5×4.8×4.5×40/50×687)
OEM :
DPI :
NISSENS :
APPLICATION :
TOYOTA COROLLA

TO-0557

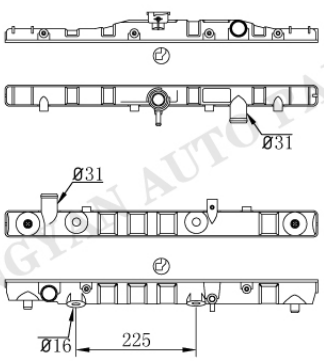

TO-0558AT/MT

Tank size :(R8.5×4.8×4.5×40/50×587)
OEM :
DPI :
NISSENS :
APPLICATION :
TOYOTA COROLLA

HONGYAN AUTO PARTS

TOYOTA/LEXUS/HINO/SCION

TO-0559

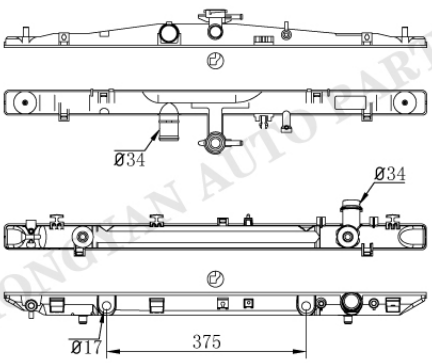

TO-0560AT/MT

Tank size :(R9×4×5×48×793.5)
OEM :
DPI :
NISSENS :
APPLICATION :
12- LEXUS RX270 2.7L

TO-0561

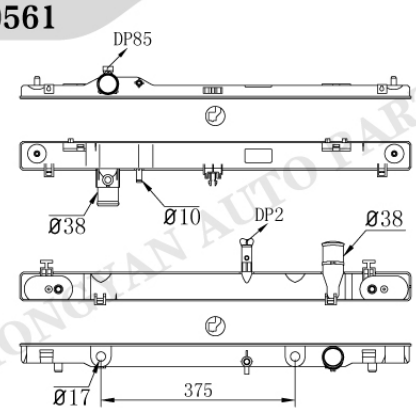

TO-0562AT/MT

Tank size :(R9×4×5×55×735)
OEM :1640038220
DPI :13096
NISSENS :
APPLICATION :
08-11 LEXUS GS460 4.6L

TO-0563

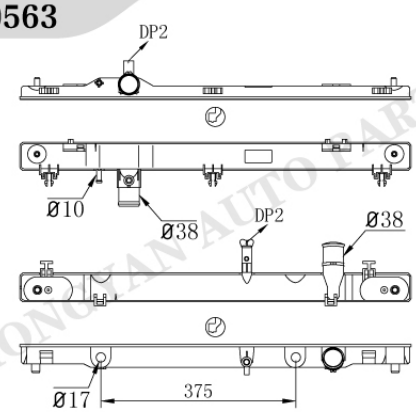

TO-0564AT/MT

Tank size :(R9×4×5×55×735)
OEM :
DPI :
NISSENS :
APPLICATION :

TO-0565

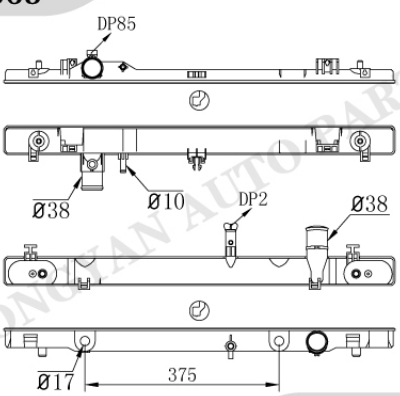

TO-0562AT/MT

Tank size :(R9×4×5×55×735)
OEM :1640038210
DPI :13056
NISSENS :
APPLICATION :
08-11 LEXUS IS F 5.0L

TOYOTA/LEXUS/HINO/SCION

TO-0566

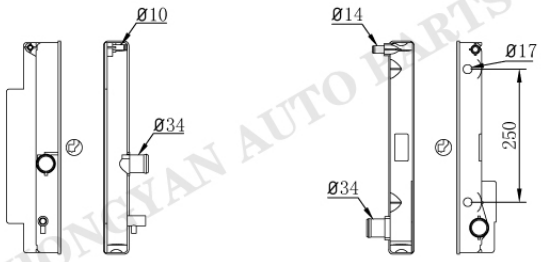

TO-0567AT/MT

Tank size :(R9×4×4.5×48×400)
OEM :1640028650 1640028660
DPI :13001
NISSENS :
APPLICATION :
08-14 SCION XB 2.4L

TO-0566

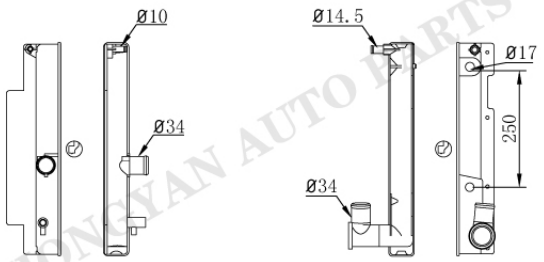

TO-0568AT/MT

Tank size :(R9×4×4.5×48×400)
OEM :
DPI :
NISSENS :
APPLICATION :

TO-0569AT/MT

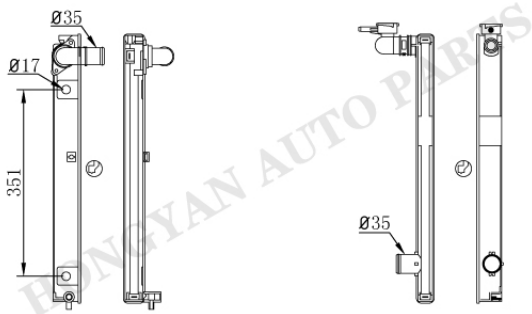

TO-0570

Tank size :(R8.5×4×4.5×40/33×505)
OEM :1604128610
DPI :
NISSENS :
APPLICATION :
05-08 TOYOTA ALPHARD

TO-0571AT/MT

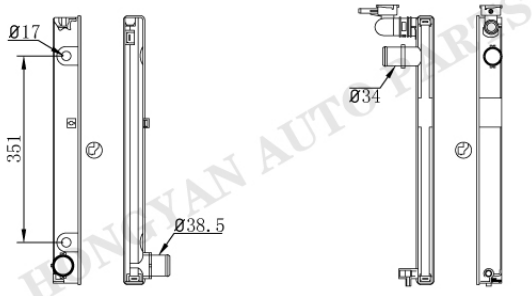

TO-0572

Tank size :(R8.5×4×4.5×40/33×505)
OEM :1604120380
DPI :
NISSENS :
APPLICATION :
05-08 TOYOTA ALPHARD

TOYOTA/LEXUS/HINO/SCION

TO-0573

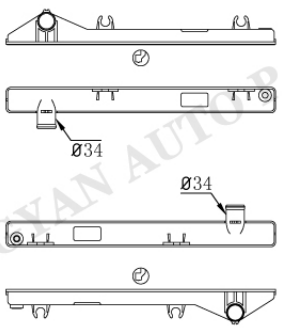

TO-0574

Tank size :(R9×4×4.5×48×507)
OEM :
DPI :
NISSENS :
APPLICATION :
TOYOTA HIACE

TO-0575

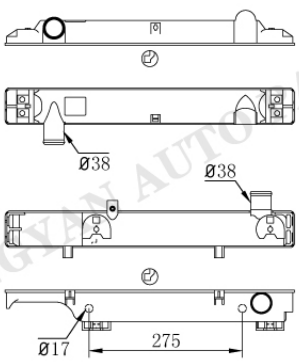

TO-0576AT/MT

Tank size :(R9×4.5×4.5×69×544)
OEM :
DPI :
NISSENS :
APPLICATION :
TOYOTA DYNA

TO-0577

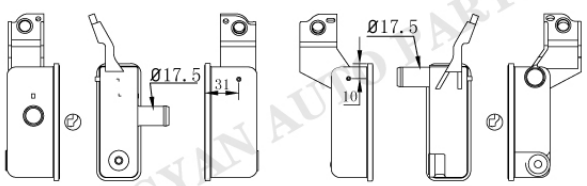

TO-0578

Tank size :(R7.5×4×5×40×105)
OEM :
DPI :
NISSENS :
APPLICATION :

TO-0579



TO-0580

Tank size :(R9×4×5×40×112)
OEM :
DPI :
NISSENS :
APPLICATION :

HONGYAN AUTO PARTS

TOYOTA/LEXUS/HINO/SCION

TO-0581

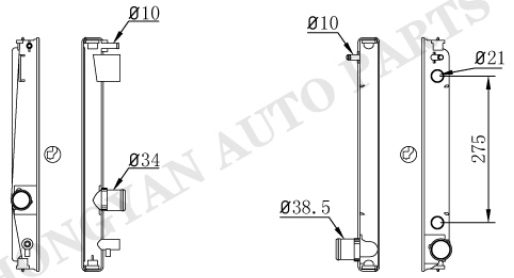

TO-0582AT/MT

Tank size :(R9×4×4.5×40×438)
OEM :1640028560
DPI :
NISSENS :
APPLICATION :
06- TOYOTA ESTIMA
06- TOYOTA PREVIA

TO-0583

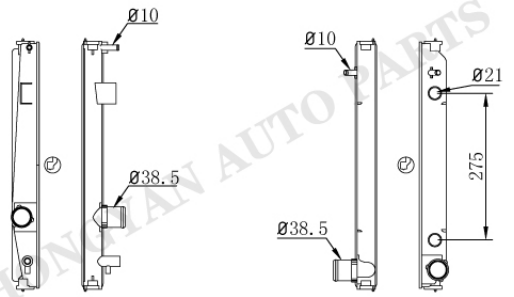

TO-0584AT/MT

Tank size :(R9×4×4.5×40×462)
OEM :1640031590
DPI :
NISSENS :
APPLICATION :
08- TOYOTA ALPHARD
08- TOYOTA VELFIRE

TO-0585

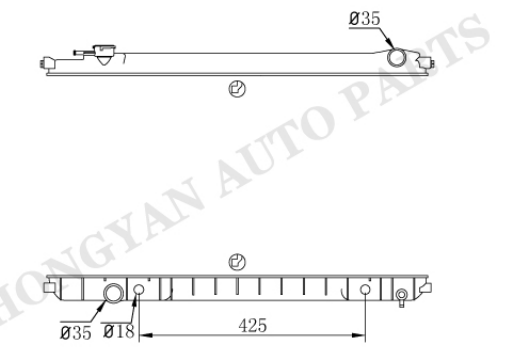

TO-0586AT/MT

Tank size :(R9×5×5×50.5×715)
OEM :1640065130
164100W020/50/51
DPI :1512 2090 2133 2134
NISSENS :
APPLICATION :
93-98 TOYOTA T100 2.7/3.0/3.4L

TO-0587

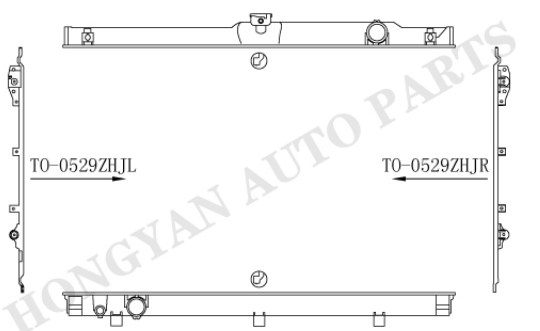

TO-0588

Tank size :(R9×4×4.5×48×736)
OEM :
DPI :2992 2993
NISSENS :
APPLICATION :
07-13 TOYOTA TUNDRA 4.0/4.7L
08-09 TOYOTA SEQUOIA 4.7L

HONGYAN AUTO PARTS

TOYOTA/LEXUS/HINO/SCION

TO-0589AT/MT

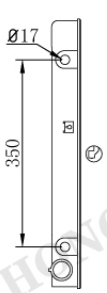



TO-0590

Tank size :(R9×4×4.5×40×506)
OEM :
DPI :
NISSENS :
APPLICATION :

TO-0591

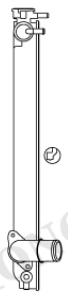

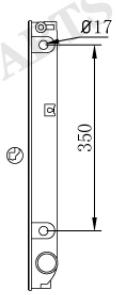

TO-0592AT/MT

Tank size :(R9×4×4.5×40×506)
OEM :164000P180/190
DPI :13019
NISSENS :
APPLICATION :
07-09 LEXUS RX350 3.5L

TO-0591



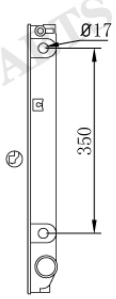

TO-0593AT/MT

Tank size :(R9×4×4.5×40×506)
OEM :160410P201
DPI :13076
NISSENS :
APPLICATION :
07-10 TOYOTA SIENNA 3.5L

TO-0594AT/MT

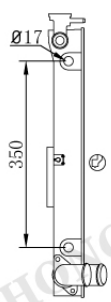



TO-0595

Tank size :(R9×4×4.5×40×506)
OEM :
DPI :
NISSENS :
APPLICATION :

HONGYAN AUTO PARTS

TOYOTA/LEXUS/HINO/SCION

TO-0596



TO-0597AT/MT

Tank size :(R9×4×4.5×40×506)
OEM :
DPI :2681
NISSENS :
APPLICATION :
04-06 TOYOTA SIENNA 3.3L

TO-0598

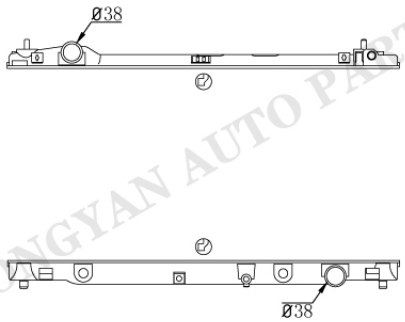

TO-0599

Tank size :(R9×4.2×4×48×736)
OEM :
DPI :
NISSENS :
APPLICATION :
TOYOTA CROWN

TO-0600

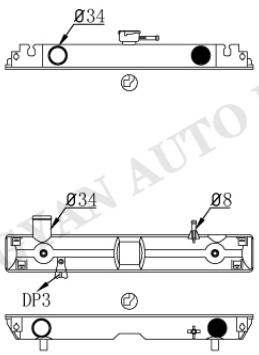

TO-0601

Tank size :(R8.5×4.6×4.7×69×465)
OEM :
DPI :
NISSENS :
APPLICATION :

TO-0602

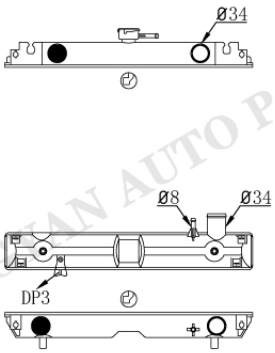

TO-0603

Tank size :(R8.5×4.6×4.7×69×465)
OEM :
DPI :
NISSENS :
APPLICATION :

HONGYAN AUTO PARTS

TOYOTA/LEXUS/HINO/SCION

TO-0604

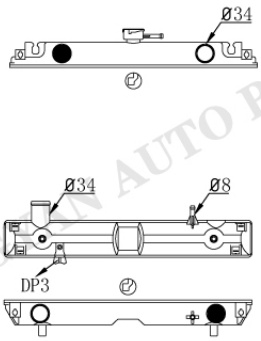

TO-0601

Tank size :(R8.5×4.6×4.7×69×465)
OEM :
DPI :
NISSENS :
APPLICATION :

TO-0605

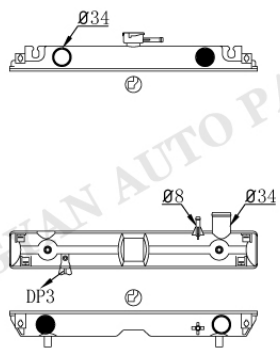

TO-0603

Tank size :(R8.5×4.6×4.7×69×465)
OEM :
DPI :
NISSENS :
APPLICATION :

TO-0606

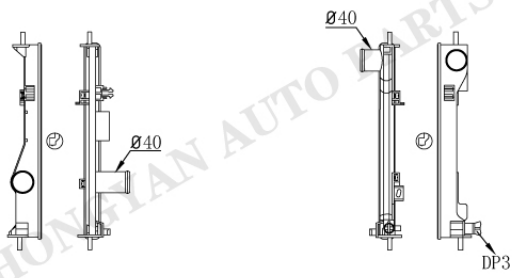

TO-0607

Tank size :(R9×4×5×31.1×368)
OEM :
DPI :
NISSENS :
APPLICATION :

TO-0608

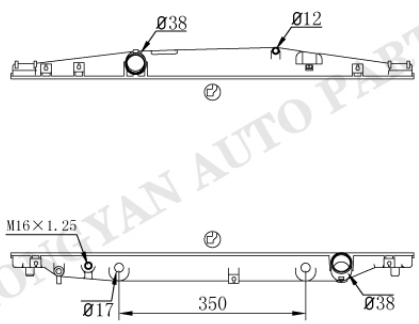

TO-0609AT/MT

Tank size :(R9×5×5×48/54.5×756)
OEM :
DPI :1306 2062
NISSENS :
APPLICATION :
92-00 LEXUS SC400

TO-100

HONGYAN AUTO PARTS

TOYOTA/LEXUS/HINO/SCION

TO-0610

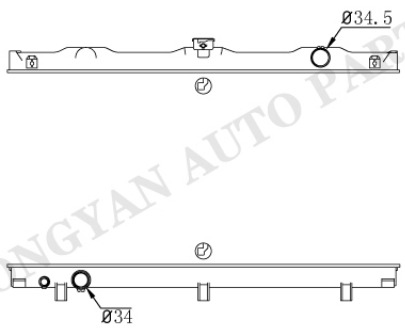

TO-0611

Tank size :(R9×4.5×5×48×736.5)
OEM :
DPI :2993
NISSENS :
APPLICATION :
07-09 TOYOTA TUNDRA

TO-0612

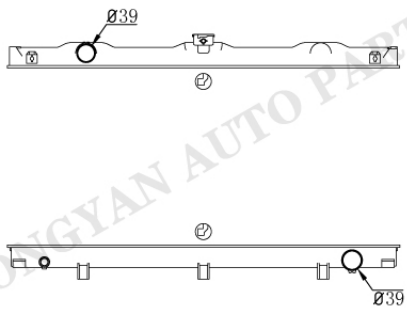

TO-0613

Tank size :(R9×4.5×5×48×736.5)
OEM :
DPI :2992 2994
NISSENS :
APPLICATION :
07-09 TOYOTA TUNDRA

TO-0614



TO-0615

Tank size :(R9×4×4.5×48×399)
OEM :
DPI :
NISSENS :
APPLICATION :
10- TOYOTA PRIUS
10- LEXUS CT200H

TO-0616

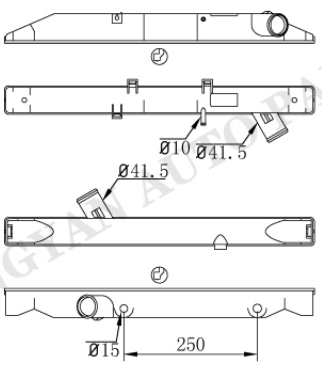

TO-0545AT/MT

Tank size :(R9×4×4.5×54×582)
OEM :
DPI :
NISSENS :
APPLICATION :
10- HINO

HONGYAN AUTO PARTS

TO-101

TOYOTA/LEXUS/HINO/SCION

TO-0617

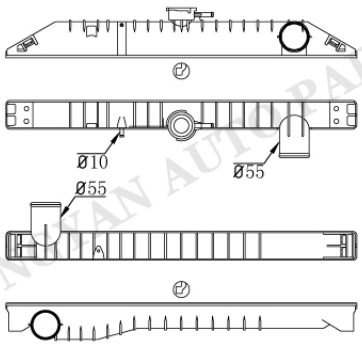

TO-0537

Tank size :(R9×4×4.5×54×658.8)
OEM :
DPI :
NISSENS :
APPLICATION :
99- HINO RAINBOW

TO-0618

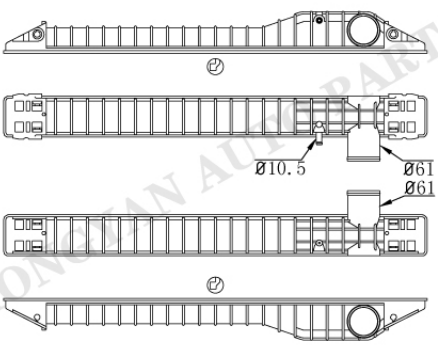

TO-0619

Tank size :(R9×5×4.5×77×795)
OEM :
DPI :
NISSENS :
APPLICATION :
HINO

TO-0620

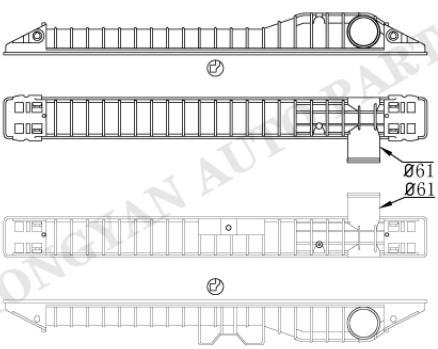

TO-0621

Tank size :(R9×5×4.5×77×795)
OEM :
DPI :
NISSENS :
APPLICATION :
HINO

TO-0622

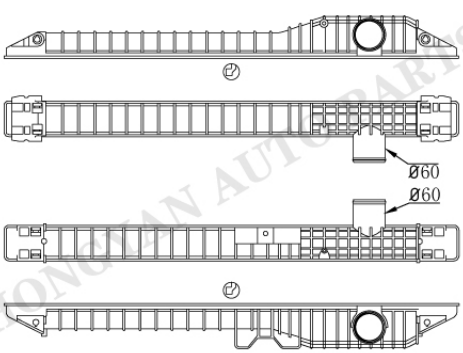

TO-0623

Tank size :(R9×5×4.5×67×853)
OEM :
DPI :
NISSENS :
APPLICATION :
HINO

TO-102

TOYOTA/LEXUS/HINO/SCION

TO-0624

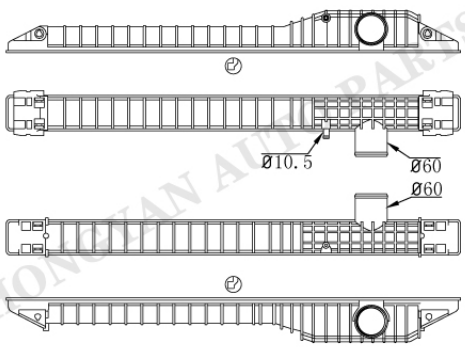

TO-0625

Tank size :(R9×5×4.5×67×853)
OEM :
DPI :
NISSENS :
APPLICATION :
HINO

TO-0626

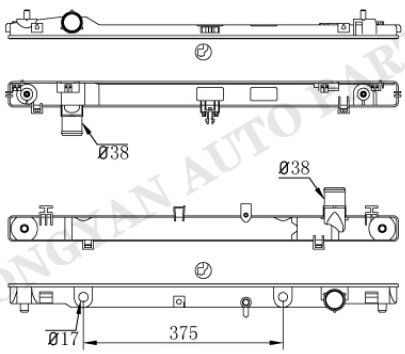

TO-0627AT/MT

Tank size :(R9×4×4.5×48×732.5)
OEM :
DPI :
NISSENS :
APPLICATION :
13- LEXUS GS450H

TO-0628

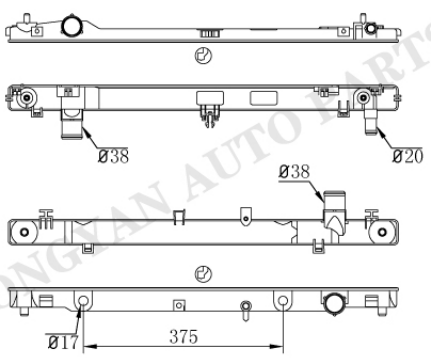

TO-0627AT/MT

Tank size :(R9×4×4.5×48×732.5)
OEM :
DPI :13340
NISSENS :
APPLICATION :
13- LEXUS GS450H

TO-0629

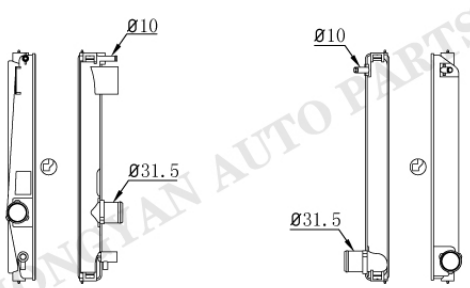

TO-0630

Tank size :(R9×4×5×44×425)
OEM :
DPI :
NISSENS :
APPLICATION :

HONGYAN AUTO PARTS

TOYOTA/LEXUS/HINO/SCION

TO-0631

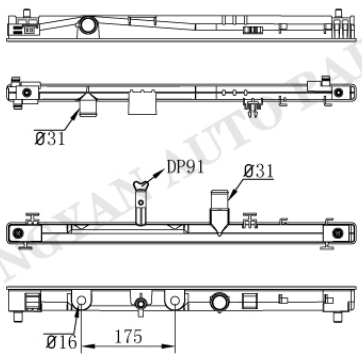

TO-0632AT/MT

Tank size :(R9×4×5×32/40×656)
OEM :
DPI :
NISSENS :
APPLICATION :
14- TOYOTA YARIS

TO-0633

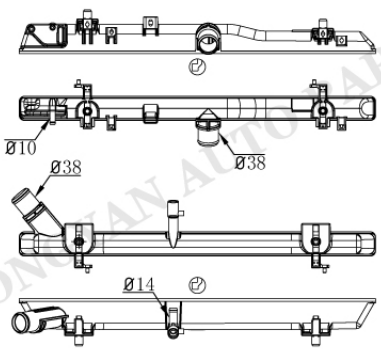

TO-0634

Tank size :(R10×4.5×4.5×45.4×668.5)
OEM :
DPI :
NISSENS :
APPLICATION :
14- TOYOTA HAICE

TO-0635

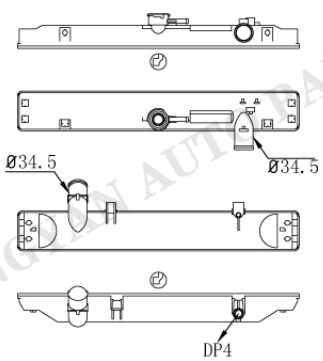

TO-0636

Tank size :(R9.5×4.5×4.5×74×528.5)
OEM :
DPI :
NISSENS :
APPLICATION :

TO-0637

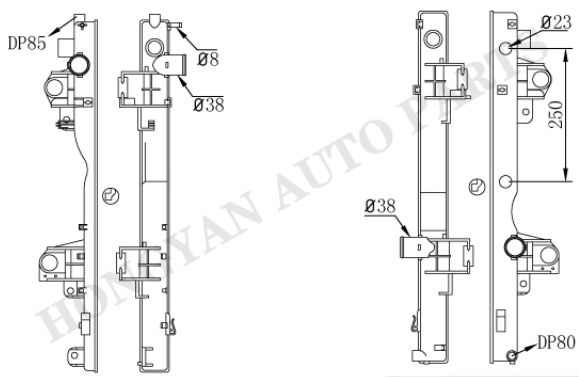

TO-0638AT/MT

Tank size :(R5×5×5×54.8×661)
OEM :
DPI :
NISSENS :
APPLICATION :
TOYOTA LANDCRUISER PRADO 150 3.0L(DIESEL)

TO-104

TOYOTA/LEXUS/HINO/SCION

TO-0639

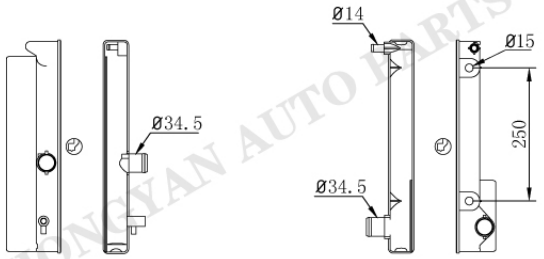

TO-0640AT/MT

Tank size :(R9×4×4.5×48×400)
OEM :
DPI :
NISSENS :
APPLICATION :
13- TOYOTA COLLORA

TO-0641

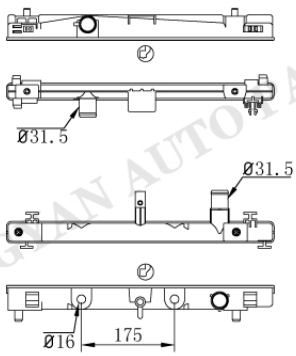

TO-0642AT/MT

Tank size :(R9×4×4.5×32/40×502.5)
OEM :
DPI :
NISSENS :
APPLICATION :
13- TOYOTA VIOS

TO-0643

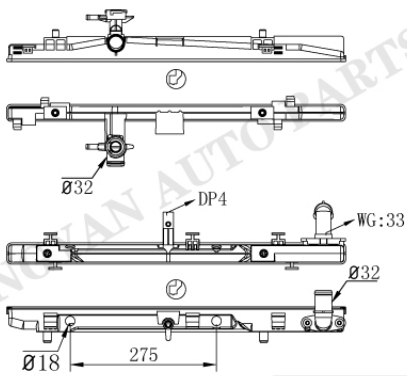

TO-0644AT/MT

Tank size :(R9.5×4×5×32/40×637)
OEM :
DPI :
NISSENS :
APPLICATION :

TO-0645

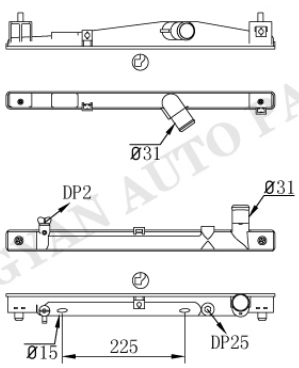

TO-0288AT/MT

Tank size :(R9×4×5×33/40×505)
OEM :
DPI :
NISSENS :
APPLICATION :
TOYOTA SIENTA 1.5L

HONGYAN AUTO PARTS

TOYOTA/LEXUS/HINO/SCION

TO-0633

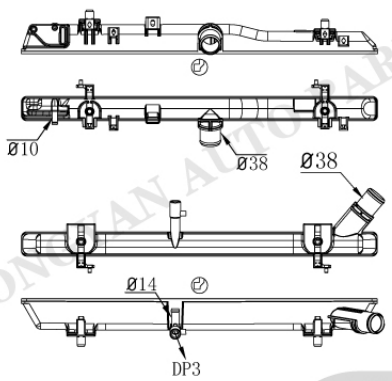

TO-0646

Tank size :(R10×4.5×4.5×45.4×668.5)
OEM :
DPI :
NISSENS :
APPLICATION :
14- TOYOTA HAICE

TO-0647

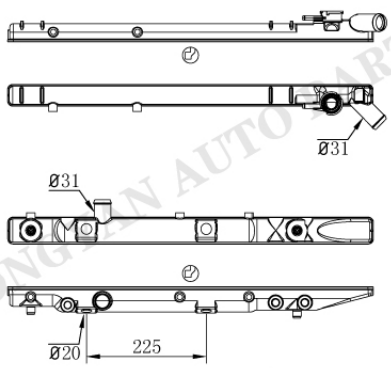

TO-0648AT/MT

Tank size :(R10×5×5×40/50×687)
OEM :1640016130
DPI :538
NISSENS :
APPLICATION :
89-95 TOYOTA COROLLA COMPACT

TO-0649

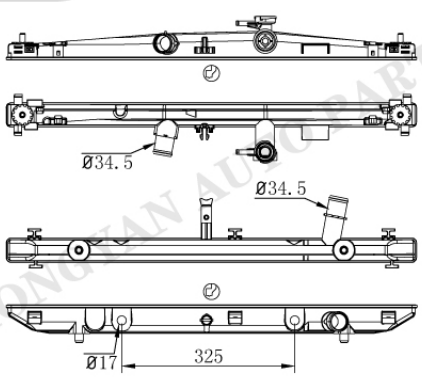

TO-0650AT/MT

Tank size :(R9×4×4.5×44×771)
OEM :164000P410
DPI :13450
NISSENS :
APPLICATION :
14-16 TOYOTA HIGHLANDER 2.7/3.5L

TO-0649

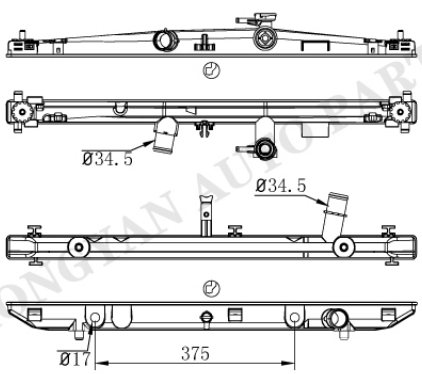

TO-0651AT/MT

Tank size :(R9×4×4.5×44×771)
OEM :164000P420
DPI :13449
NISSENS :
APPLICATION :
14-16 TOYOTA HIGHLANDER 2.7/3.5L

HONGYAN AUTO PARTS

TOYOTA/LEXUS/HINO/SCION

TO-0649

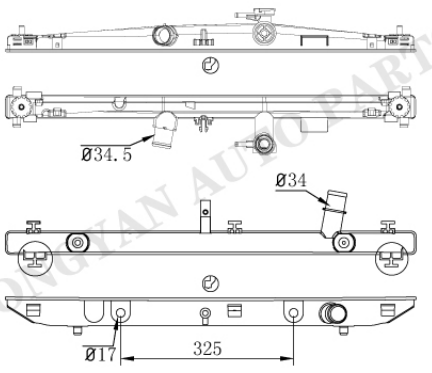

TO-0652AT/MT

Tank size :(R9×4×4.5×44×771)
OEM :
DPI :
NISSENS :
APPLICATION :
14-16 TOYOTA HIGHLANDER 2.7/3.5L

TO-0649

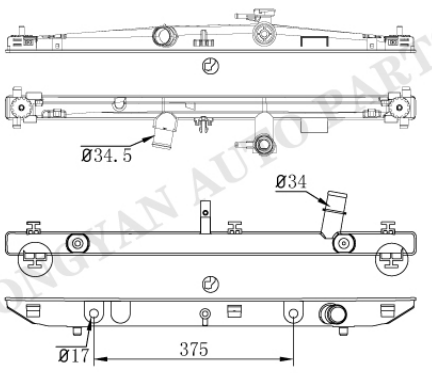

TO-0653AT/MT

Tank size :(R9×4×4.5×44×771)
OEM :
DPI :
NISSENS :
APPLICATION :
14-16 TOYOTA HIGHLANDER 2.7/3.5L

TO-0654

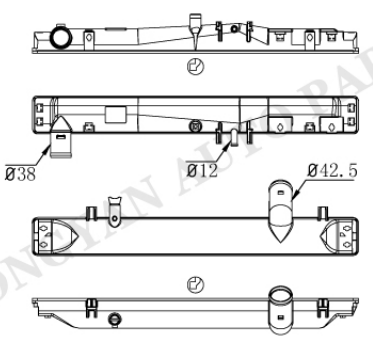

TO-0655

Tank size :(R9.5×4.5×4.5×69×613)
OEM :
DPI :
NISSENS :
APPLICATION :
06- TOYOTA LAND CRUISER

TO-0656

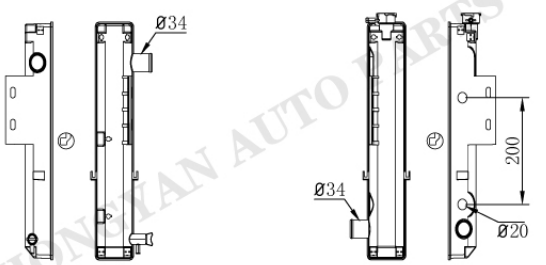

TO-0657AT/MT

Tank size :(R9×4.5×4.5×85×446.5)
OEM :
DPI :
NISSENS :
APPLICATION :
TOYOTA FORKLIFT

HONGYAN AUTO PARTS

TOYOTA/LEXUS/HINO/SCION

TO-0656

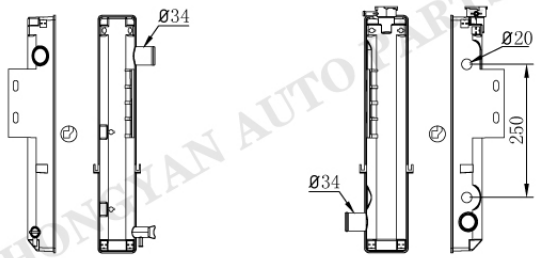

TO-0658AT/MT

Tank size :(R9×4.5×4.5×85×446.5)
OEM :
DPI :
NISSENS :
APPLICATION :
TOYOTA FORKLIFT

TO-0656

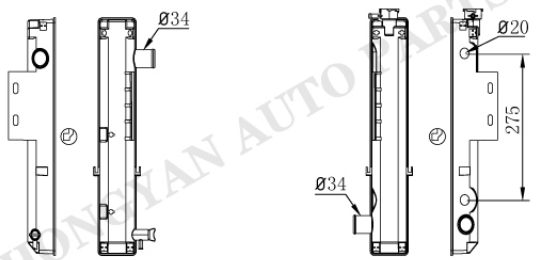

TO-0659AT/MT

Tank size :(R9×4.5×4.5×85×446.5)
OEM :
DPI :
NISSENS :
APPLICATION :
TOYOTA FORKLIFT

TO-0660

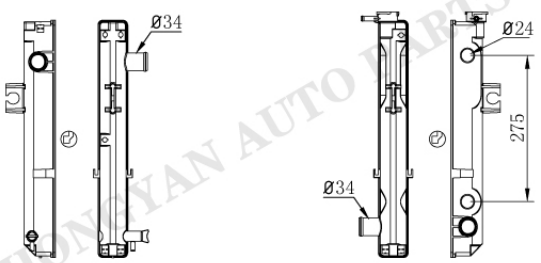

TO-0661AT/MT

Tank size :(R9.5×4.5×4.5×58×446)
OEM :
DPI :
NISSENS :
APPLICATION :
TOYOTA FORKLIFT

TO-0662

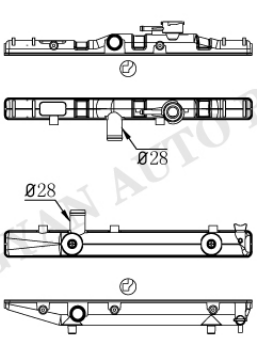

TO-0663

Tank size :(R9×5×4.5×40/49×466)
OEM :1640010011/0
DPI :
NISSENS :
APPLICATION :
84-89 TOYOTA SRARLET

TOYOTA/LEXUS/HINO/SCION

TO-0664

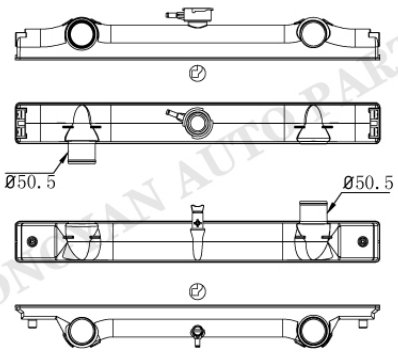

TO-0665

Tank size :(R8.5×5×5×75×685)
OEM :
DPI :
NISSENS :
APPLICATION :
TOYOTA

TO-0666

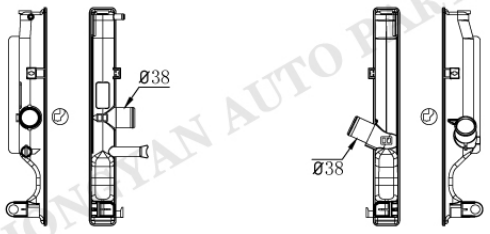

TO-0667

Tank size :(R9×4×4.5×48×410)
OEM :
DPI :
NISSENS :
APPLICATION :
07- TOYOTA AURIS 2.0L (DIESEL)

TO-0668

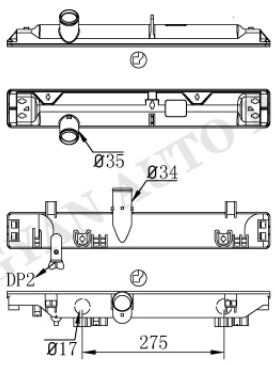

TO-0203AT/MT

Tank size :(R9.5×4.5×4.5×69×494)
OEM :
DPI :
NISSENS :
APPLICATION :
TOYOTA DYNA

TO-0669

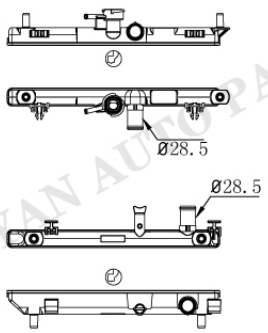

TO-0670

Tank size :(R9.5×4×4.5×33×400)
OEM :16410BZ320
DPI :
NISSENS :
APPLICATION :
12- TOYOTA AVANZA 1.3L

HONGYAN AUTO PARTS

TOYOTA/LEXUS/HINO/SCION

TO-0671

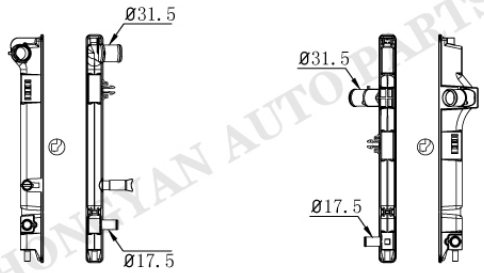

TO-0672

Tank size :(R9×4×4.5×33×428.5)
OEM :
DPI :13319
NISSENS :
APPLICATION :
12-16 TOYOTA PRIUS 1.5L

TO-0673

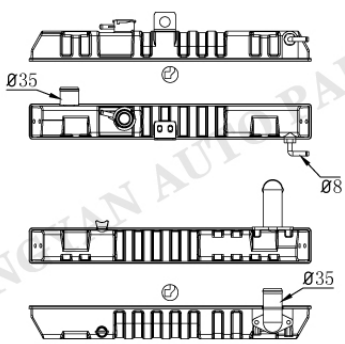

TO-0674

Tank size :(R6×5×5×65×530)
OEM :
DPI :
NISSENS :
APPLICATION :
88-89 TOYOTA HIACE

TO-0675

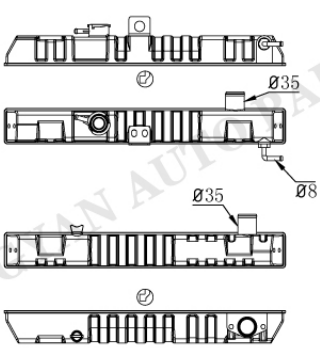

TO-0676

Tank size :(R6×5×5×65×530)
OEM :
DPI :
NISSENS :
APPLICATION :
88-89 TOYOTA HIACE

TO-0677

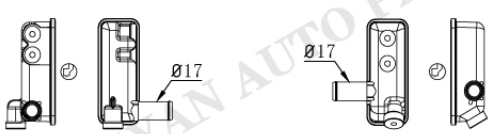

TO-0678

Tank size :(R8.5×4×4.5×39.5×98.5)
OEM :
DPI :
NISSENS :
APPLICATION :
10-11 LEXUS RH450H

HONGYAN AUTO PARTS

TO-110

TOYOTA/LEXUS/HINO/SCION

TO-0679



TO-0680

Tank size :(R9×4×5×39.5×105)
OEM :
DPI :
NISSENS :
APPLICATION :

TO-0681

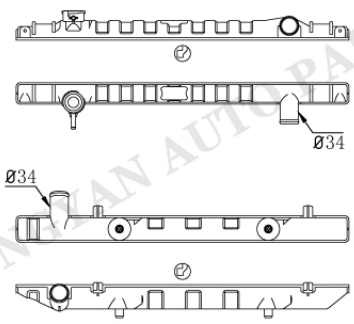

TO-0682

Tank size :(R8×5×5×40×625.5)
OEM :1640072130
DPI :
NISSENS :
APPLICATION :

TO-0683

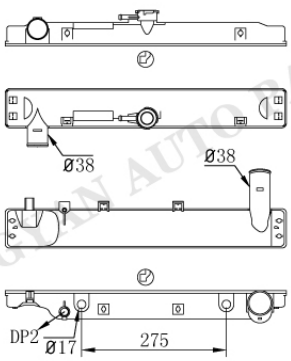

TO-0201AT/MT

Tank size :(R9×5×4.5×75×528)
OEM :1640017071/161
DPI :
NISSENS :
APPLICATION :
96-99 TOYOTA LAND CRUISER

TO-0684

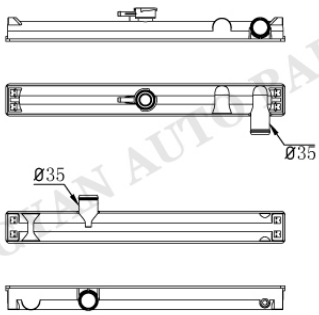

TO-0685

Tank size :(R8×5×4.5×60.5×525.5)
OEM :
DPI :
NISSENS :
APPLICATION :

HONGYAN AUTO PARTS

TOYOTA/LEXUS/HINO/SCION

TO-0133

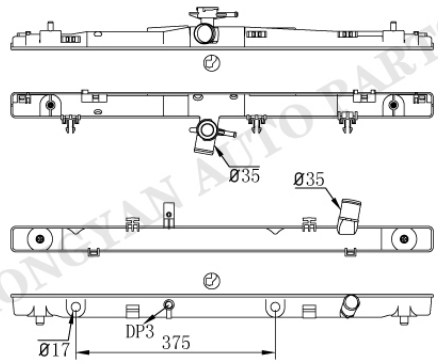

TO-0686AT/MT

Tank size :(R9×4×5×48×794)
OEM :
DPI :
NISSENS :
APPLICATION :
13-14 TOYOTA AVALON 2.5/3.5L
12-14 TOYOTA CAMRY 2.5/3.5L

TO-0687

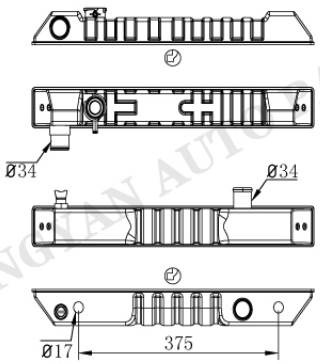

TO-0688AT/MT

Tank size :(R6×5×4.5×65×529)
OEM :1640054630
DPI :
NISSENS :
APPLICATION :
89- HILUX 2.4/3L

TO-0689

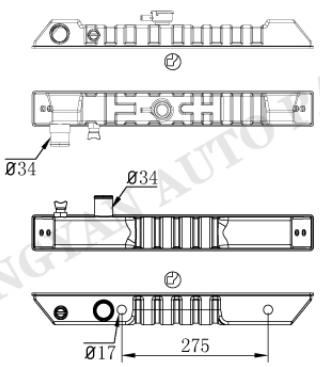

TO-0690AT/MT

Tank size :(R6×5×4.5×65×529)
OEM :
DPI :
NISSENS :
APPLICATION :
89- HILUX 2.4/3L

TO-0494

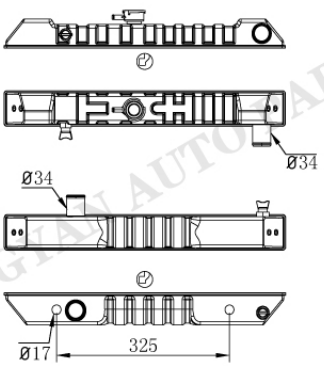

TO-0691AT/MT

Tank size :(R6×5×4.5×65×529)
OEM :
DPI :
NISSENS :
APPLICATION :
HILUX 2.0L

TO-112

TOYOTA/LEXUS/HINO/SCION

TO-0094

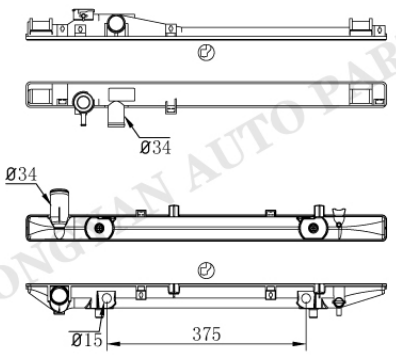

TO-0692AT/MT

Tank size :(R9×4×5×48×678.3)
OEM :
DPI :
NISSENS :
APPLICATION :

TO-0693

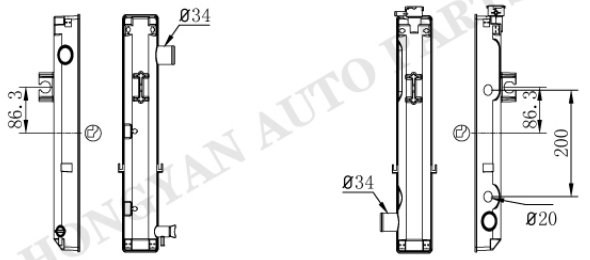

TO-0694AT/MT

Tank size :(R9×4.5×4.5×85×446.5)
OEM :
DPI :
NISSENS :
APPLICATION :
TOYOTA FORKLIFT

TO-0693

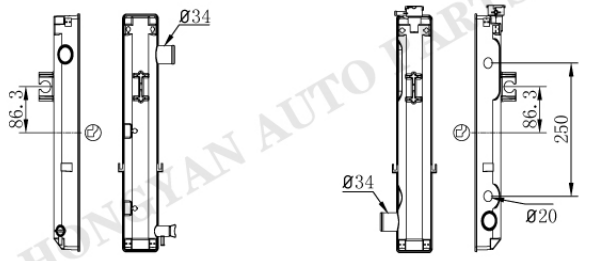

TO-0694-1AT

Tank size :(R9×4.5×4.5×85×446.5)
OEM :
DPI :
NISSENS :
APPLICATION :
TOYOTA FORKLIFT

TO-0693

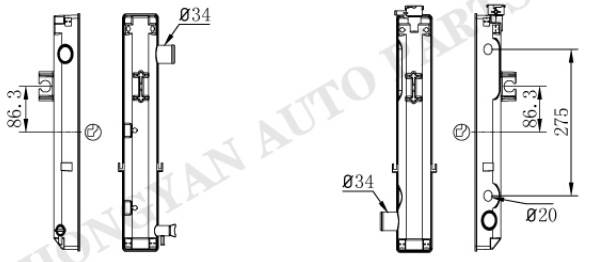

TO-0694-2AT

Tank size :(R9×4.5×4.5×85×446.5)
OEM :
DPI :
NISSENS :
APPLICATION :
TOYOTA FORKLIFT

TOYOTA/LEXUS/HINO/SCION

TO-0693

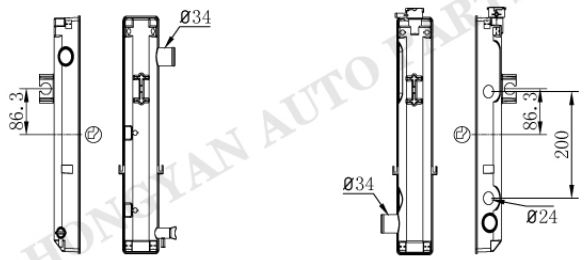

TO-0694-3AT

Tank size : (R9×4.5×4.5×85×446.5)
OEM :
DPI :
NISSENS :
APPLICATION :
TOYOTA FORKLIFT

TO-0693

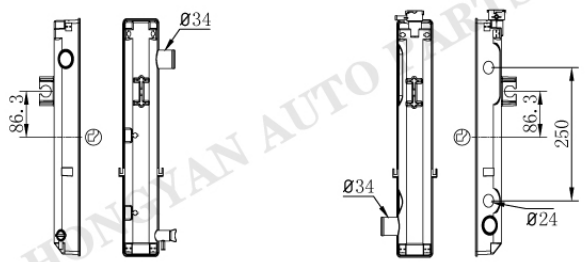

TO-0694-4AT

Tank size : (R9×4.5×4.5×85×446.5)
OEM :
DPI :
NISSENS :
APPLICATION :
TOYOTA FORKLIFT

TO-0693

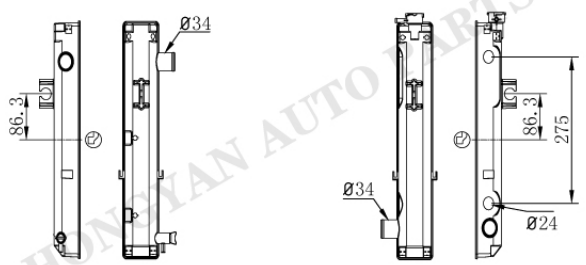

TO-0694-5AT

Tank size : (R9×4.5×4.5×85×446.5)
OEM :
DPI :
NISSENS :
APPLICATION :
TOYOTA FORKLIFT

TO-0695

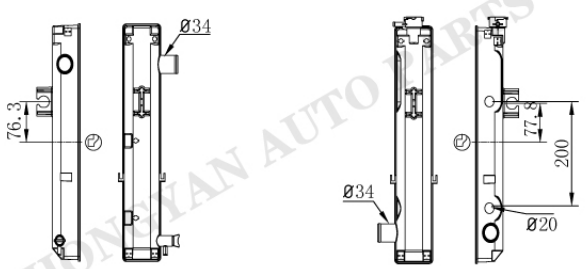

TO-0696AT/MT

Tank size : (R9×4.5×4.5×85×446.5)
OEM :
DPI :
NISSENS :
APPLICATION :
TOYOTA FORKLIFT

HONGYAN AUTO PARTS

TO-114

TOYOTA/LEXUS/HINO/SCION

TO-0695

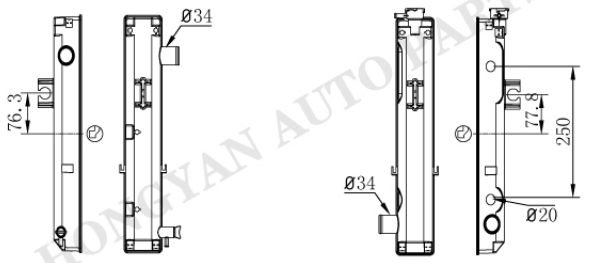

TO-0696-1AT

Tank size :(R9×4.5×4.5×85×446.5)
OEM :
DPI :
NISSENS :
APPLICATION :
TOYOTA FORKLIFT

TO-0695

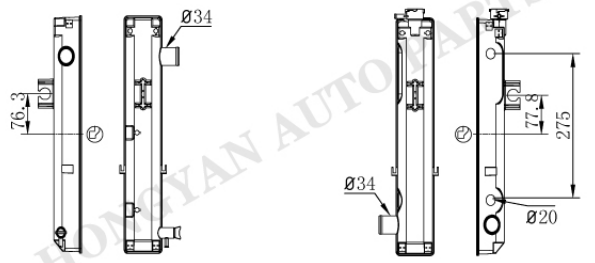

TO-0696-2AT

Tank size :(R9×4.5×4.5×85×446.5)
OEM :
DPI :
NISSENS :
APPLICATION :
TOYOTA FORKLIFT

TO-0695

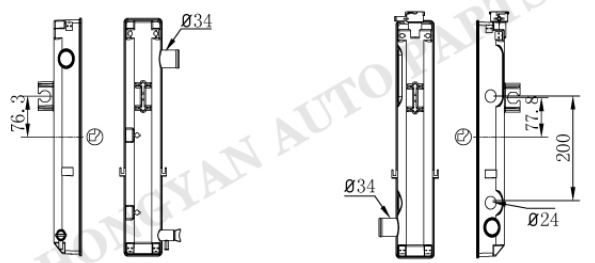

TO-0696-3AT

Tank size :(R9×4.5×4.5×85×446.5)
OEM :
DPI :
NISSENS :
APPLICATION :
TOYOTA FORKLIFT

TO-0695

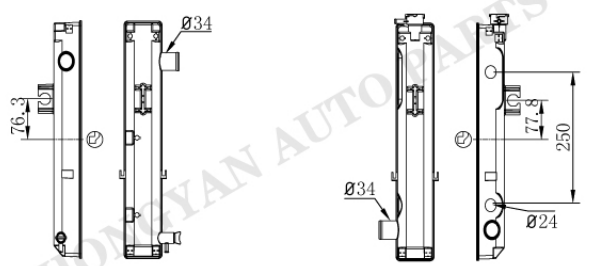

TO-0696-4AT

Tank size :(R9×4.5×4.5×85×446.5)
OEM :
DPI :
NISSENS :
APPLICATION :
TOYOTA FORKLIFT

HONGYAN AUTO PARTS

TO-115

TOYOTA/LEXUS/HINO/SCION

TO-0695

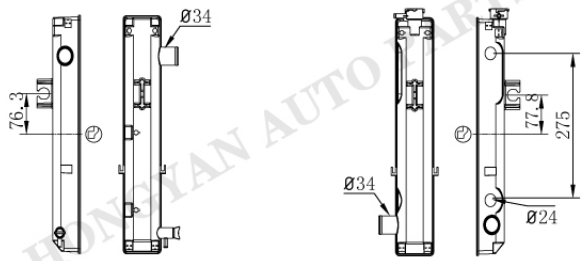

TO-0696-5AT

Tank size :(R9×4.5×4.5×85×446.5)
OEM :
DPI :
NISSENS :
APPLICATION :
TOYOTA FORKLIFT

TO-0697AT/MT

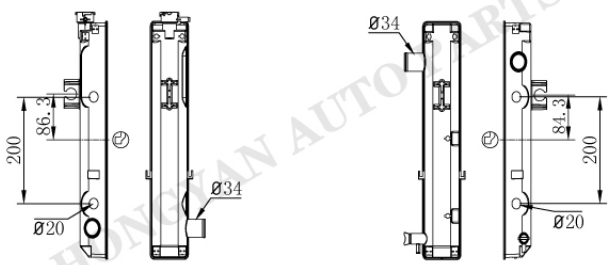

TO-0698AT/MT

Tank size :(R9×4.5×4.5×85×446.5)
OEM :
DPI :
NISSENS :
APPLICATION :
TOYOTA FORKLIFT

TO-0697-1AT

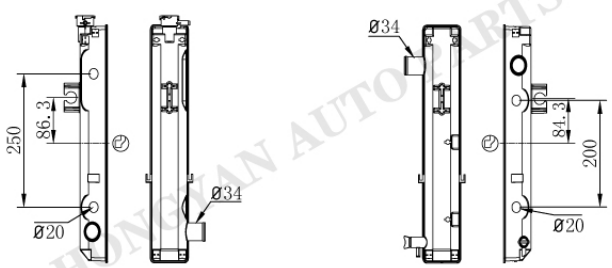

TO-0698AT/MT

Tank size :(R9×4.5×4.5×85×446.5)
OEM :
DPI :
NISSENS :
APPLICATION :
TOYOTA FORKLIFT

TO-0697-2AT

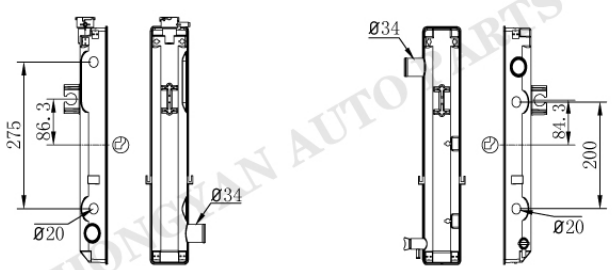

TO-0698AT/MT

Tank size :(R9×4.5×4.5×85×446.5)
OEM :
DPI :
NISSENS :
APPLICATION :
TOYOTA FORKLIFT

HONGYAN AUTO PARTS

TOYOTA/LEXUS/HINO/SCION

TO-0697-3AT

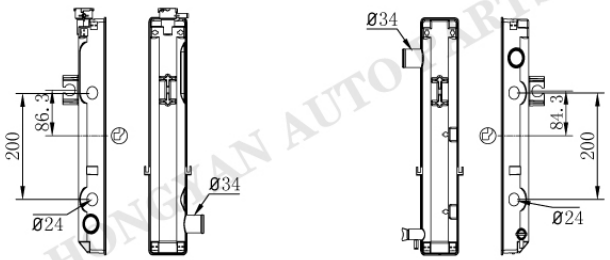

TO-0698-1AT

Tank size :(R9×4.5×4.5×85×446.5)
OEM :
DPI :
NISSENS :
APPLICATION :
TOYOTA FORKLIFT

TO-0697-4AT

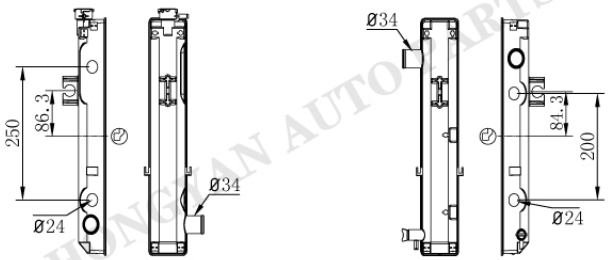

TO-0698-1AT

Tank size :(R9×4.5×4.5×85×446.5)
OEM :
DPI :
NISSENS :
APPLICATION :
TOYOTA FORKLIFT

TO-0697-5AT

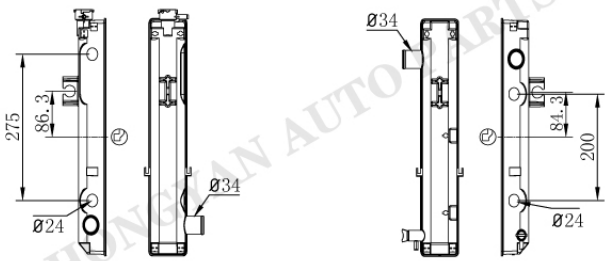

TO-0698-1AT

Tank size :(R9×4.5×4.5×85×446.5)
OEM :
DPI :
NISSENS :
APPLICATION :
TOYOTA FORKLIFT

TO-0699



TO-0700AT/MT

Tank size :(49.5×425)
OEM :
DPI :
NISSENS :
APPLICATION :
TOYOTA WISH

HONGYAN AUTO PARTS

TOYOTA/LEXUS/HINO/SCION

TO-0701

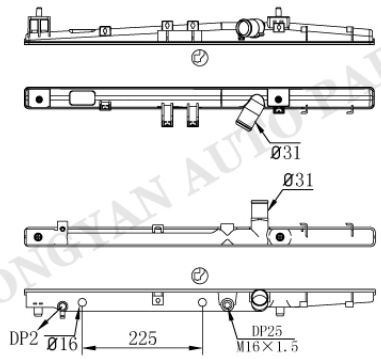

TO-0136AT/MT

Tank size :(R9×4×4.5×40×658.5)
OEM :1640021210
DPI :
NISSENS :
APPLICATION :
02-03 PROBOX/SUCCEED

TO-0702

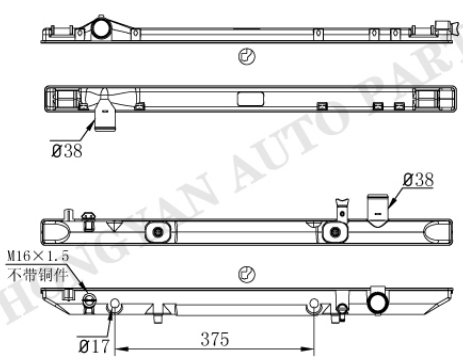

TO-0703AT/MT

Tank size :(R8.5×4.5×4.5×48×774)
OEM :1640050020
DPI :
NISSENS :
APPLICATION :
90-94 LEXUS

TO-0704

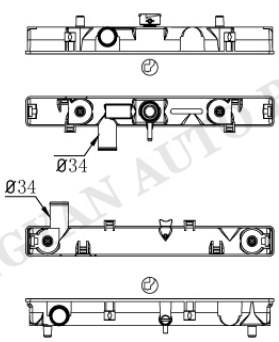

TO-0705

Tank size :(R9×4×4.5×54×467)
OEM :
DPI :
NISSENS :
APPLICATION :
TOYOTA

TO-0704

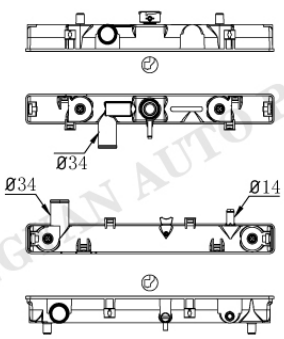

TO-0706

Tank size :(R9×4×4.5×54×467)
OEM :
DPI :
NISSENS :
APPLICATION :
TOYOTA

HONGYAN AUTO PARTS

TOYOTA/LEXUS/HINO/SCION

TO-0707

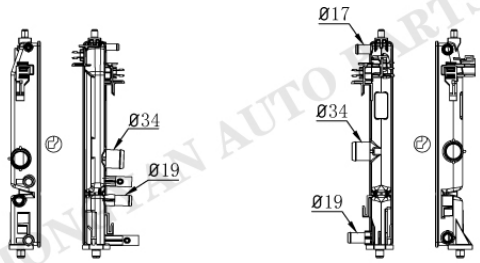

TO-0708

Tank size :(R9×4×4.5×44×387)
OEM :
DPI :
NISSENS :
APPLICATION :
15- TOYOTA PRIUS

TO-0709

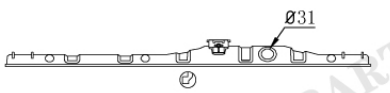

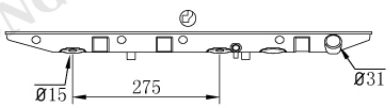

TO-0710AT/MT

Tank size :(40.5/50×687)
OEM :
DPI :532 870
NISSENS :
APPLICATION :
87-91 TOYOTA CAMRY 2.0L

TO-0711

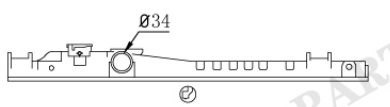

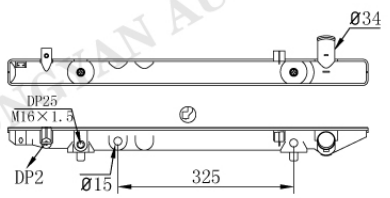

TO-0095AT/MT

Tank size :(R9×4×5×40/48×678.3)
OEM :1640046150/60
DPI :
NISSENS :
APPLICATION :
83-87 TOYOTA CROWN 2.0/2.5/2.8L

TO-0712

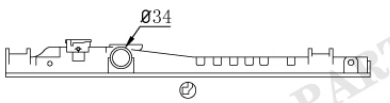

Tank size :(R8.5×4×4.5×40×686)
OEM :
DPI :
NISSENS :
APPLICATION :
83-87 TOYOTA CROWN 2.0/2.5/2.8L

HONGYAN AUTO PARTS

TOYOTA/LEXUS/HINO/SCION

TO-0714

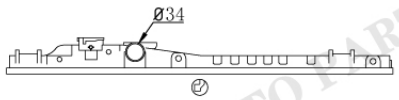

Tank size :(R8.5×4×4.5×39.5×727)
OEM :
DPI :
NISSENS :
APPLICATION :
83-87 TOYOTA CROWN 2.0/2.5/2.8L

TO-0716



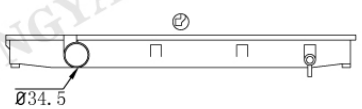

TO-0717

Tank size :(R8.5×5×4.5×54.5×658)
OEM :
DPI :
NISSENS :
APPLICATION :
TOYOTA HI-LUX/LANDCRUISER 2.7L

TO-0718

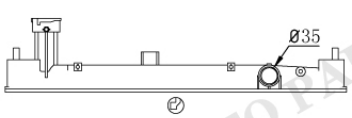

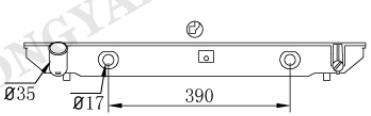

TO-0719AT/MT

Tank size :(R9.5×4.5×4.5×58.5×642)
OEM :
DPI :
NISSENS :
APPLICATION :
99-01 TOYOTA

TO-0720

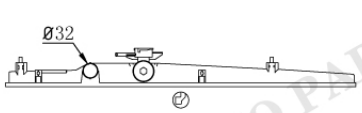

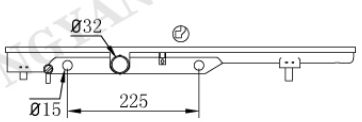

TO-0721AT/MT

Tank size :(R7.5×4.8×4×32.5×39×659)
OEM :
DPI :
NISSENS :
APPLICATION :
02- TOYOTA

HONGYAN AUTO PARTS

TOYOTA/LEXUS/HINO/SCION

TO-0722

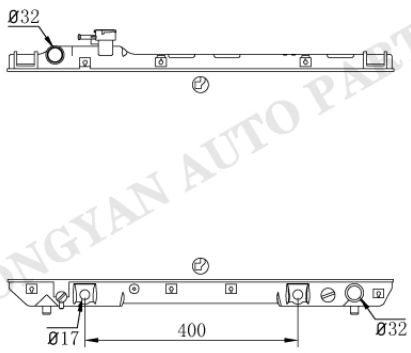

TO-0723AT/MT

Tank size :(R9.5×4.5×5×50×727)
OEM :
DPI :
NISSENS :6476A 64706
APPLICATION :
94-97 TOYOTA RAV4 2.0L

TO-0724

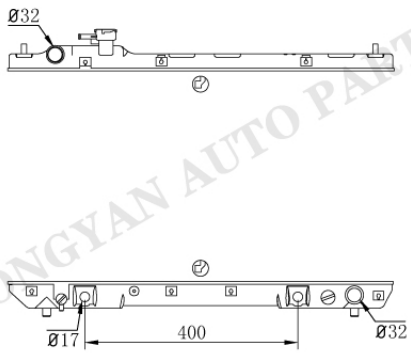

TO-0723AT/MT

Tank size :(R8.5×4.5×5×50×727)
OEM :164007A480/7A500
DPI :
NISSENS :64630A 64629A
APPLICATION :
97-20 TOYOTA RAV4 2.0L

TO-0725

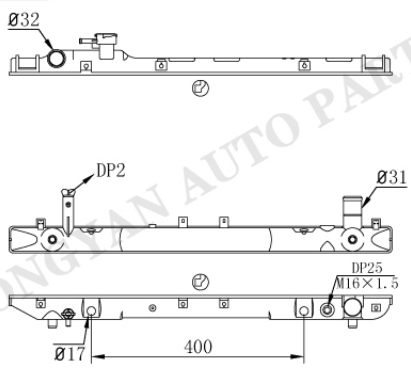

TO-0272AT/MT

Tank size :(R8.5×4.5×5×50×720)
OEM :
DPI :
NISSENS :
APPLICATION :
94-97 TOYOTA RAV4 2.0L

TO-0726

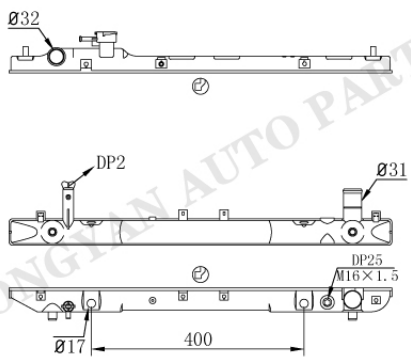

TO-0272AT/MT

Tank size :(R8.5×4.5×5×50×720)
OEM :
DPI :
NISSENS :
APPLICATION :
97-20 TOYOTA RAV4 2.0L

HONGYAN AUTO PARTS

TO-121

TOYOTA/LEXUS/HINO/SCION

TO-0718

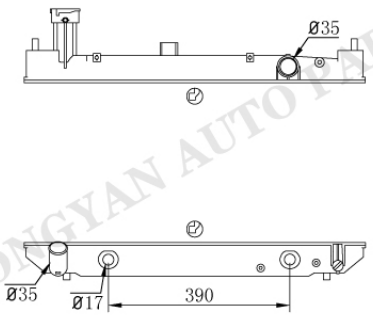

TO-0727AT/MT

Tank size :(R9.5×4.5×4.5×58.5×642)
OEM :1640075220
DPI :
NISSENS :
APPLICATION :
99-01 TOYOTA

TO-0728

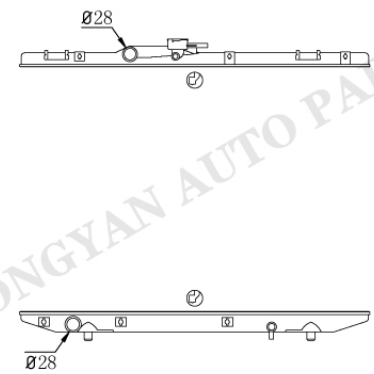

TO-0729

Tank size :(R8.5×4×5×48×659)
OEM :1640011310
DPI :
NISSENS :64843
APPLICATION :
89-96 TOYOTA

TO-0730

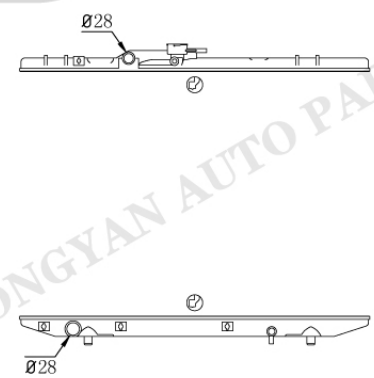

TO-0729

Tank size :(R8.5×4×5×33/48×659)
OEM :
DPI :
NISSENS :
APPLICATION :
89-96 TOYOTA

TO-0731

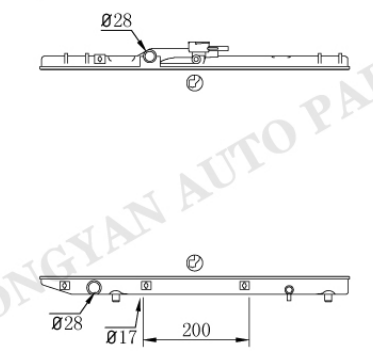

TO-0732AT/MT

Tank size :(R9×4×5×33/48×582)
OEM :
DPI :
NISSENS :64473
APPLICATION :
96-99 TOYOTA

HONGYAN AUTO PARTS

TOYOTA/LEXUS/HINO/SCION

TO-0733

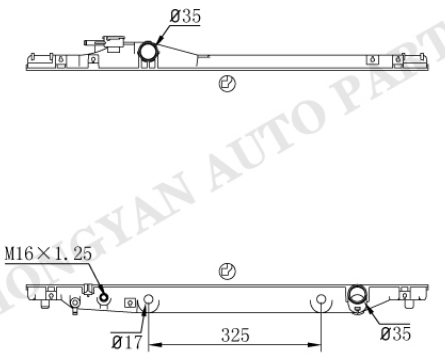

TO-0734AT/MT

Tank size :(R10×5×5×48/54.5×756)
OEM :
DPI :1305 1855/6/7/8 2061
NISSENS :
APPLICATION :
92-96 LEXUS SC300 3.0L

TO-0735AT/MT

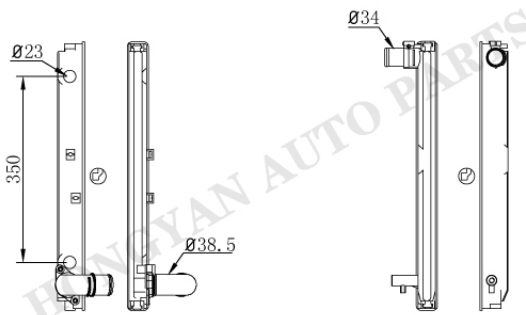

TO-0736

Tank size :(R9×4×4.5×40×505)
OEM :
DPI :
NISSENS :
APPLICATION :
TOYOTA

TO-0737AT/MT

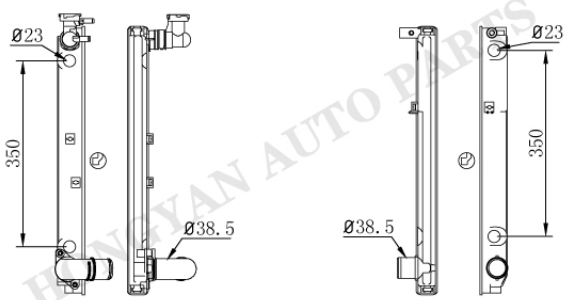

TO-0738AT/MT

Tank size :(R9×4×4.5×40×505)
OEM :
DPI :
NISSENS :
APPLICATION :
TOYOTA

TO-0739

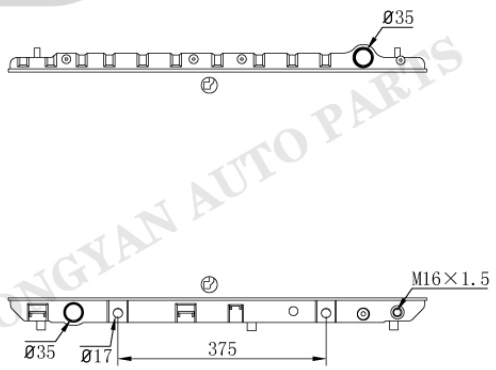

TO-0740AT/MT

Tank size :(R10×4.5×5×48×756.5)
OEM :
DPI :1910 2004 2299
NISSENS :
APPLICATION :
01-07 TOYOTA CAMRY 3.0L

HONGYAN AUTO PARTS

TOYOTA/LEXUS/HINO/SCION

TO-0741AT

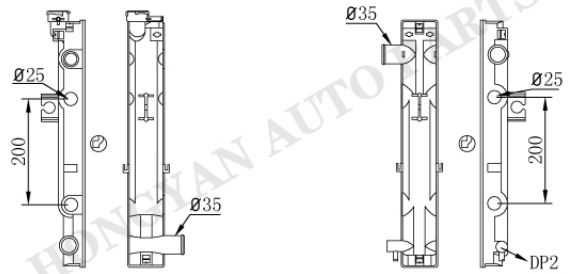

TO-0427AT/MT

Tank size :(R9×4.5×4.5×68.5×465)
OEM :
DPI :
NISSENS :
APPLICATION :
TOYOTA FORKLIFT

TO-0424AT/MT

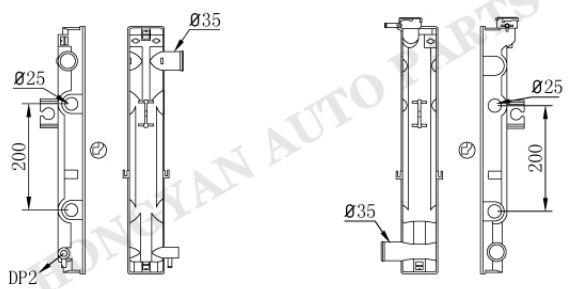

TO-0742AT

Tank size :(R9×4.5×4.5×68.5×465)
OEM :
DPI :
NISSENS :
APPLICATION :
TOYOTA FORKLIFT

TO-0432

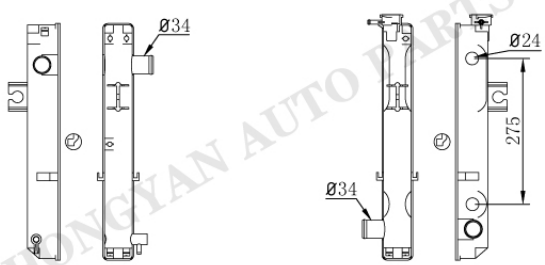

TO-0743AT

Tank size :(R9.5×4.5×5×58×445)
OEM :
DPI :
NISSENS :
APPLICATION :
TOYOTA FORKLIFT

TO-0744AT

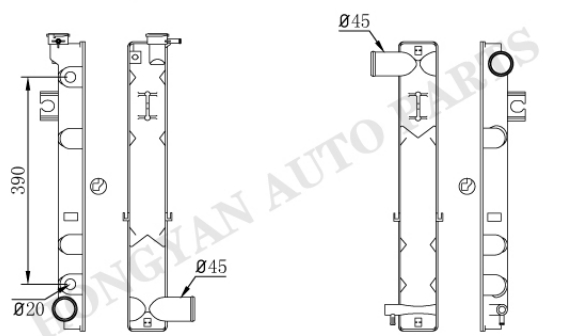

TO-0441

Tank size : (R9.5×4.5×5×74×544)
OEM :
DPI :
NISSENS :
APPLICATION :
TOYOTA FORKLIFT

TO-124

HONGYAN AUTO PARTS

TOYOTA/LEXUS/HINO/SCION

TO-0745

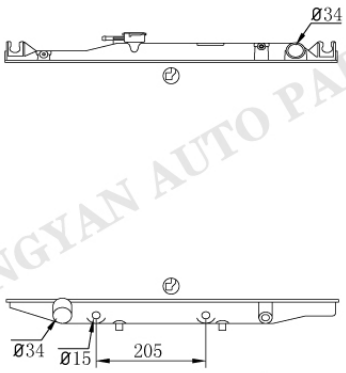

TO-0746AT/MT

Tank size :(39.5/50×625)
OEM :
DPI :812
NISSENS :
APPLICATION :
82-85 TOYOTA CELICA 2.4L

TO-0747



TO-0748AT/MT

Tank size :(40×371)
OEM :
DPI :
NISSENS :
APPLICATION :
03-05 TOYOTA COROLLA (European)

TO-0749

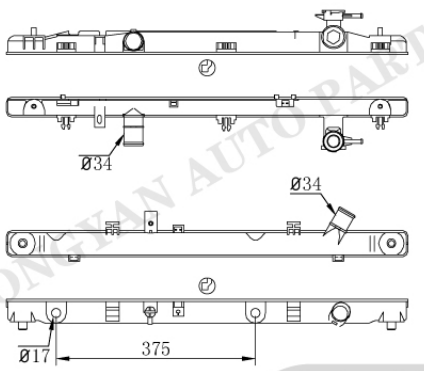

TO-0750AT/MT

Tank size :(R8×4×5×48×755)
OEM :
DPI :13090 13159 13160
NISSENS :
APPLICATION :
09-15 TOYOTA VENZA
10-11 TOYOTA CAMRY

TO-0751

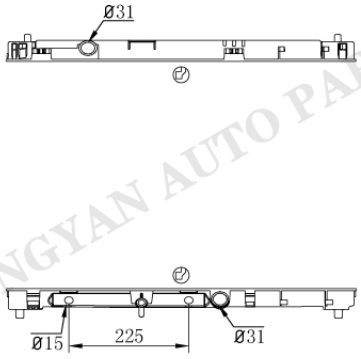

TO-0752AT/MT

Tank size :(48×657)
OEM :
DPI :
NISSENS :
APPLICATION :
06- TOYOTA YARIS

HONGYAN AUTO PARTS

TOYOTA/LEXUS/HINO/SCION

TO-0753

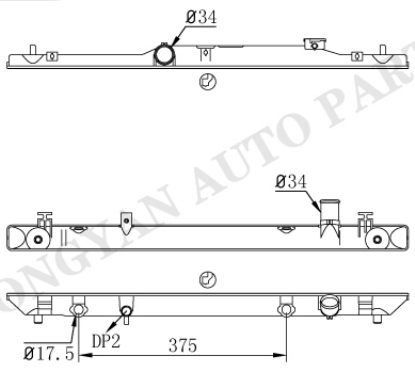

TO-0138AT/MT

Tank size :(R9×4×5×33/48×755)
OEM :1640001170/160
DPI :
NISSENS :
APPLICATION :
02- TOYOTA CAMRY

TO-0754

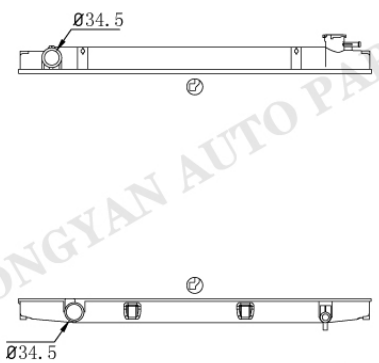

TO-0755

Tank size :(57×662.5)
OEM :
DPI :
NISSENS :
APPLICATION :
TOYOTA QUALIS

TO-0756

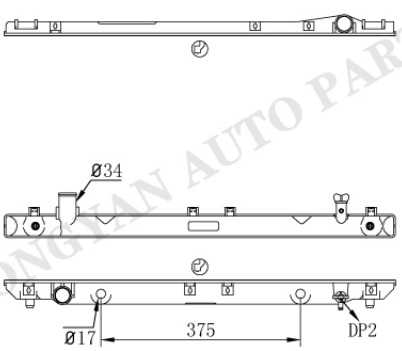

TO-0050AT/MT

Tank size :(R9×4×5×32.5/48×736)
OEM :1640020050
DPI :1746
NISSENS :
APPLICATION :
95-96 TOYOTA CAMRY 3.0L
95-97 TOYOTA AVALON 3.0L
94-96 LEXUS ES300 3.0L

TO-0757



Tank size :(R9×4×5×33×697)
OEM :
DPI :
NISSENS :
APPLICATION :

HONGYAN AUTO PARTS

TOYOTA/LEXUS/HINO/SCION

TO-0759

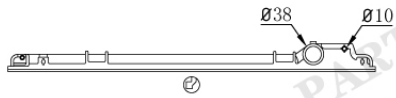

Tank size :(R9×4.5×5×40×691)
OEM :
DPI :
NISSENS :
APPLICATION :

TO-0761

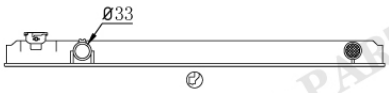



TO-0762

Tank size :(R8×4×5×54×715)
OEM :1641007070
DPI :2322
NISSENS :
APPLICATION :
00-06 TOYOTA TUNDRA 3.4/4.0L

TO-0763

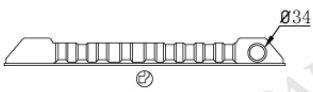

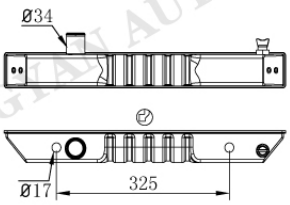

TO-0691AT/MT

Tank size :(R8×4.5×5×65×529)
OEM :
DPI :
NISSENS :
APPLICATION :
88-95 TOYOTA PICKUP

TO-0687

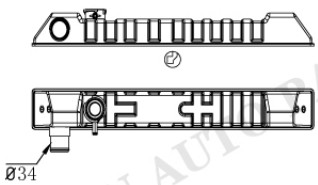

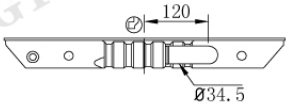

TO-0764

Tank size :(R8×4.5×5×65×529)
OEM :
DPI :
NISSENS :
APPLICATION :
88-95 TOYOTA PICKUP

HONGYAN AUTO PARTS

TOYOTA/LEXUS/HINO/SCION

TO-0687

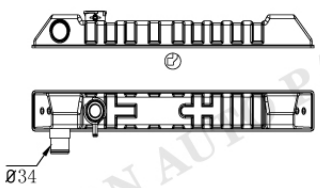

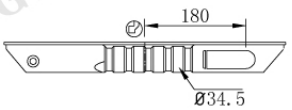

TO-0765

Tank size :(R8×4.5×5×65×529)
OEM :
DPI :
NISSENS :
APPLICATION :
88-95 TOYOTA PICKUP

TO-0766

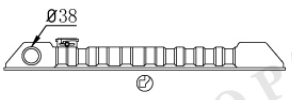

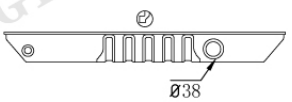

TO-0767

Tank size :(R8×4.5×5×65×529)
OEM :
DPI :
NISSENS :
APPLICATION :
88-95 TOYOTA PICKUP

TO-0768

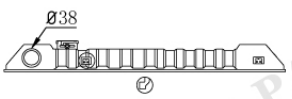

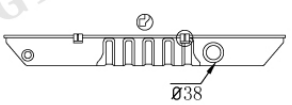

TO-0769

Tank size :(R8×4.5×5×65×529)
OEM :
DPI :
NISSENS :
APPLICATION :
88-95 TOYOTA PICKUP

TO-0770

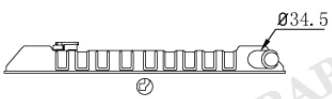

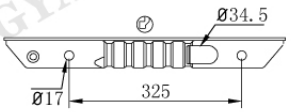

TO-0771AT/MT

Tank size :(R8×4.5×5×65×529)
OEM :
DPI :
NISSENS :
APPLICATION :
88-95 TOYOTA PICKUP

HONGYAN AUTO PARTS

TOYOTA/LEXUS/HINO/SCION

TO-0772

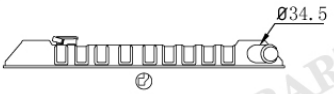

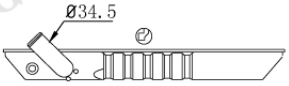

TO-0773

Tank size :(R8×4.5×5×65×529)
OEM :
DPI :
NISSENS :
APPLICATION :
88-95 TOYOTA PICKUP

TO-0774

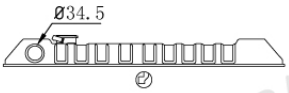

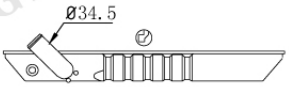

TO-0773

Tank size :(R8×4.5×5×65×529)
OEM :
DPI :
NISSENS :
APPLICATION :
88-95 TOYOTA PICKUP

TO-0775

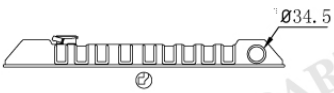

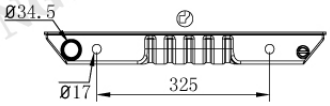

TO-0492AT/MT

Tank size :(R8×4.5×5×65×529)
OEM :
DPI :
NISSENS :
APPLICATION :
88-95 TOYOTA PICKUP

TO-0776

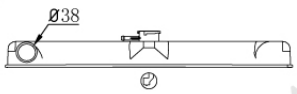

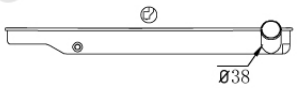

TO-0777

Tank size :(R9×4.8×4.7×77×540)
OEM :
DPI :10082
NISSENS :
APPLICATION :
TOYOTA LANDCRUSER HZ J75

HONGYAN AUTO PARTS

TOYOTA/LEXUS/HINO/SCION

TO-0778

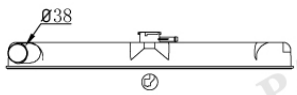



TO-0779

Tank size :(R9×4.8×4.7×77×540)
OEM :
DPI :
NISSENS :
APPLICATION :
TOYOTA LANDCRUSER HZ J75

TO-0397

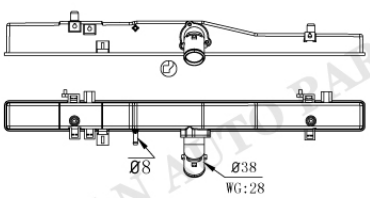

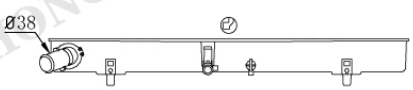

TO-0780

Tank size :(R9×5×5×57×677)
OEM :
DPI :
NISSENS :
APPLICATION :
TOYOTA HIACE

TO-0397

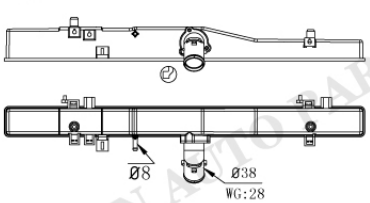

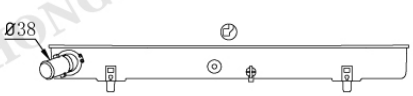

TO-0781

Tank size :(R9×5×5×57×677)
OEM :
DPI :
NISSENS :
APPLICATION :
TOYOTA HIACE

TO-0397

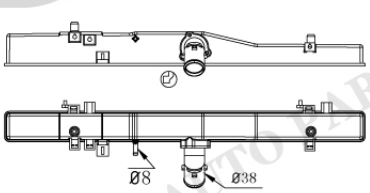

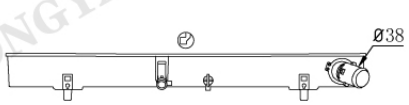

TO-0782

Tank size :(R9×5×5×57×677)
OEM :
DPI :
NISSENS :
APPLICATION :
TOYOTA HIACE

HONGYAN AUTO PARTS

TOYOTA/LEXUS/HINO/SCION

TO-0400

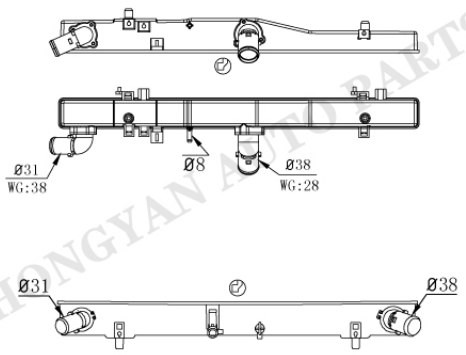

TO-0783

Tank size :(R9×5×5×57×677)
OEM :
DPI :
NISSENS :
APPLICATION :
TOYOTA HIACE

TO-0784

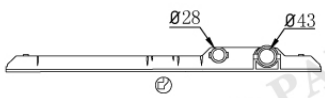

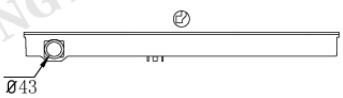

TO-0785

Tank size :(R9.5×4.5×4.6×54×593)
OEM :
DPI :
NISSENS :
APPLICATION :

TO-0786

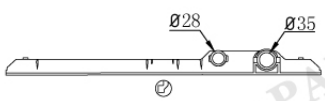

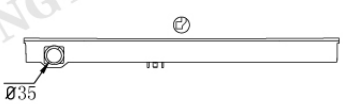

TO-0787

Tank size :(R9.5×4.5×4.6×54×593)
OEM :
DPI :
NISSENS :
APPLICATION :

TO-0788

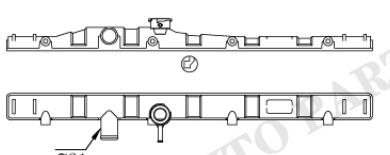

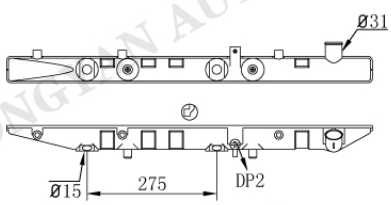

TO-0076AT/MT

Tank size :(R9.5×4.5×4.7×50×687)
OEM :1640074130
DPI :532
NISSENS :
APPLICATION :
87-91 TOYOTA CAMRY 2.0L

HONGYAN AUTO PARTS

TO-131

TOYOTA/LEXUS/HINO/SCION

TO-0789



TO-0790AT/MT

Tank size :(R9×4×5×40×400)
OEM :
DPI :
NISSENS :
APPLICATION :

TO-0351

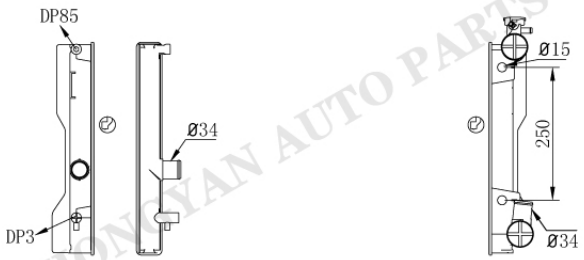

TO-0791AT/MT

Tank size :(R9×4×5×48×400)
OEM :
DPI :
NISSENS :
APPLICATION :

TO-0792

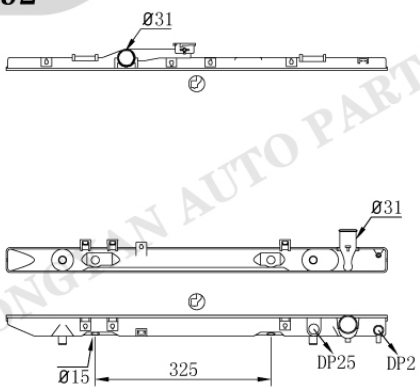

TO-0145AT/MT

Tank size :(R9×4×5×48×717)
OEM :1640074500/10
DPI :1174 1173 1437
NISSENS :
APPLICATION :
90-93 TOYOTA CELICA 2.2L

TO-0793

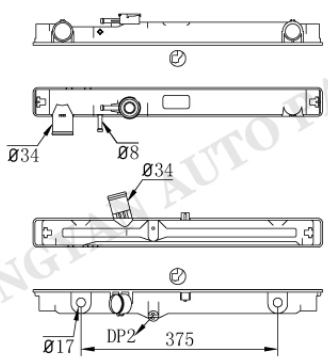

TO-0161AT/MT

Tank size :(R9×4×5×54.5×544)
OEM :
DPI :
NISSENS :
APPLICATION :
97-02 TOYOTA PICKUP

TO-132

HONGYAN AUTO PARTS

TOYOTA/LEXUS/HINO/SCION

TO-0794

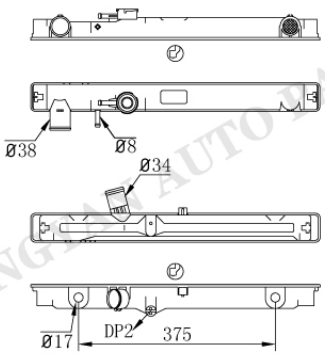

TO-0161AT/MT

Tank size :(R9×4×5×54.5×544)
OEM :
DPI :
NISSENS :
APPLICATION :
1997-02 TOYOTA PICKUP

TO-0795

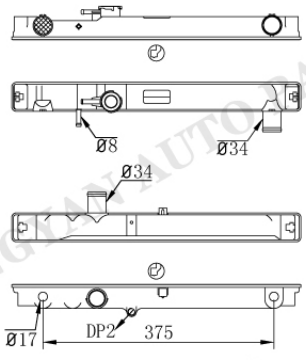

TO-0162AT/MT

Tank size :(R9×4×5×54.5×544)
OEM :
DPI :
NISSENS :
APPLICATION :
1997-02 TOYOTA PICKUP

TO-0796

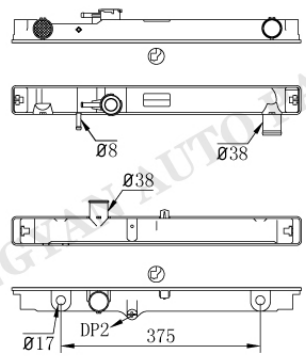

TO-0165AT/MT

Tank size :(R9×4×5×54.5×544)
OEM :
DPI :
NISSENS :
APPLICATION :
1997-02 TOYOTA PICKUP

TO-0797

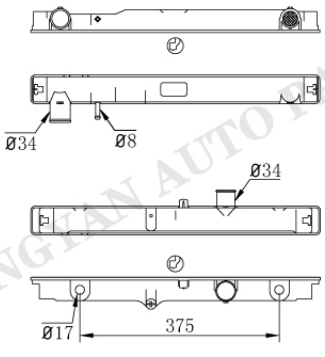

TO-0798AT/MT

Tank size :(R9×4×5×54.5×544)
OEM :
DPI :
NISSENS :
APPLICATION :
1997-02 TOYOTA PICKUP

HONGTIAN AUTO PARTS

TOYOTA/LEXUS/HINO/SCION

TO-0799

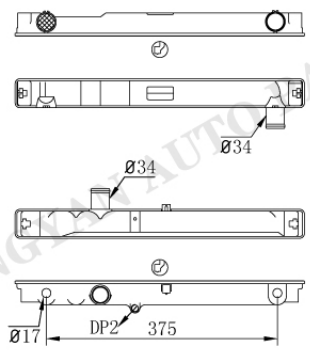

TO-0162AT/MT

Tank size : (R9×4×5×54.5×544)
OEM :
DPI :
NISSENS :
APPLICATION :
1997-02 TOYOTA PICKUP

TO-0800

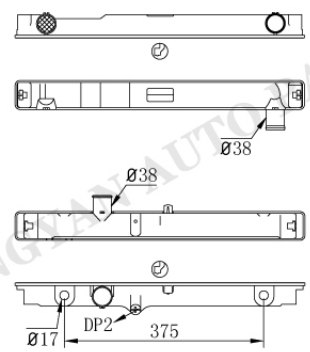

TO-0165AT/MT

Tank size : (R9×4×5×54.5×544)
OEM :
DPI :
NISSENS :
APPLICATION :
1997-02 TOYOTA PICKUP

TO-0801

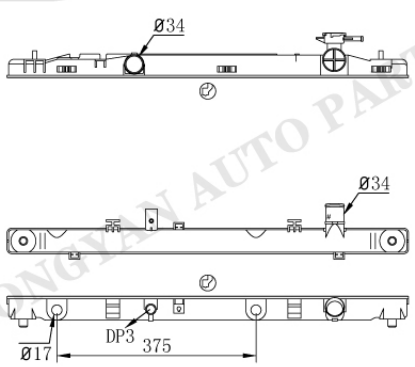

TO-0129AT/MT

Tank size :(R9×4×5×33/48×755)
OEM :164000H291
DPI :2917
NISSENS :
APPLICATION :
07-11 TOYOTA CAMRY 2.4/2.5L

TO-0802

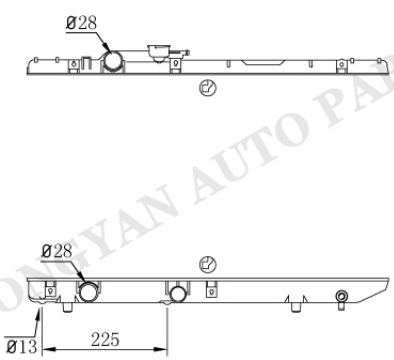

TO-0803AT/MT

Tank size : (R9×4×4.5×33/40×680)
OEM :
DPI :1381 1427
NISSENS :
APPLICATION :
91-94 TOYOTA TERCEL 1.5L
92-95 TOYOTA PASEO 1.5L

HONGYAN AUTO PARTS

TO-134

TOYOTA/LEXUS/HINO/SCION

TO-0804

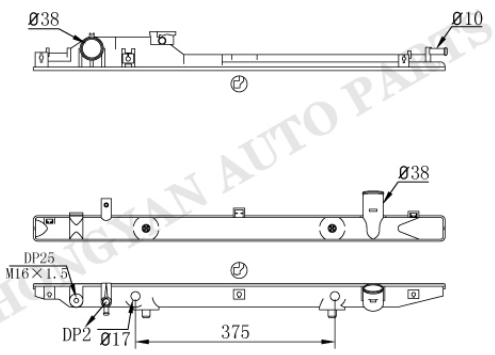

TO-0222AT/MT

Tank size :(R9×4×5×48×774)
OEM :
DPI :2541
NISSENS :
APPLICATION :
01-05 LEXUS GS430 4.3L

TO-0805

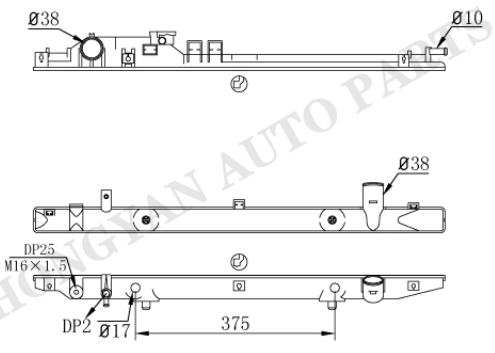

TO-0222AT/MT

Tank size :(R9×4×5×48×774)
OEM :
DPI :2575
NISSENS :
APPLICATION :
01-05 LEXUS GS430 4.3L

TO-0806

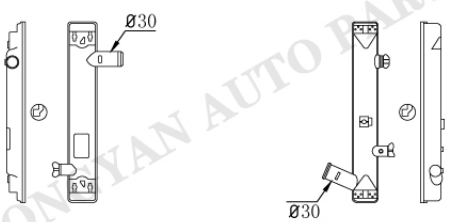

TO-0807

Tank size :(R6.5×5×5×52×339.8)
OEM :
DPI :
NISSENS :
APPLICATION :
86-96 TOYOTA COASTER

TO-0808

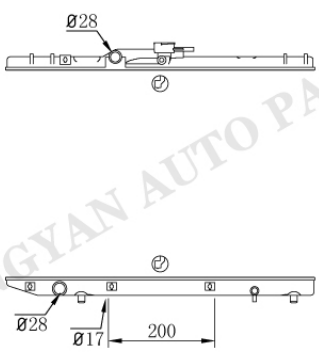

TO-0732AT/MT

Tank size :(R9×4×5×48×583)
OEM :
DPI :
NISSENS :
APPLICATION :
89-96 TOYOTA STARLET

HONGYAN AUTO PARTS

TO-135

TOYOTA/LEXUS/HINO/SCION

TO-0295

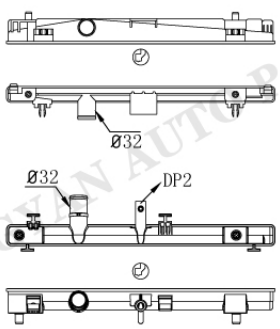

TO-0809

Tank size :(R9×4×5×33/40×505)
OEM :1640023170 164000Q040
DPI :
NISSENS :64671A
APPLICATION :
05-10 TOYOTA YARIS 1.0/1.3L

TO-0810

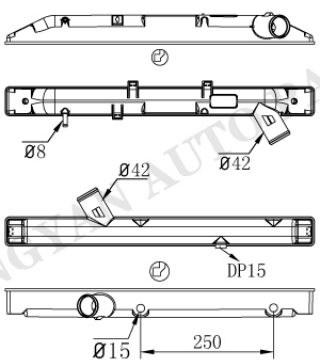

TO-0545AT/MT

Tank size :(R9×4×4.5×54×582)
OEM :1640078331 1640078332
DPI :
NISSENS :
APPLICATION :
04-06 TOYOTA DYNA TOYOACE

TO-0811

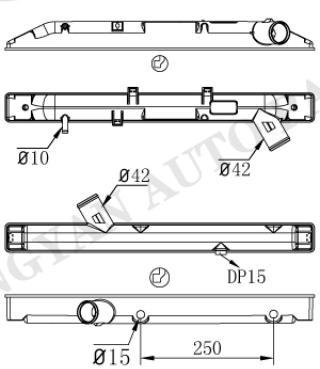

TO-0545AT/MT

Tank size :(R9×4×4.5×54×582)
OEM :1640078321 1640078333
DPI :
NISSENS :
APPLICATION :
04-06 TOYOTA DYNA

TO-0812

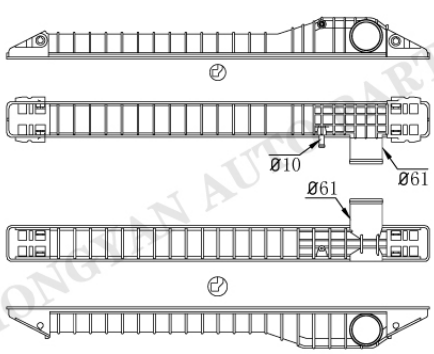

TO-0813

Tank size :(R8.5×4.5×4.5×66×794)
OEM :16041E005016081/6250/6260
DPI :
NISSENS :
APPLICATION :
HINO 700HD

HONGTIAN AUTO PARTS

TOYOTA/LEXUS/HINO/SCION

TO-0802

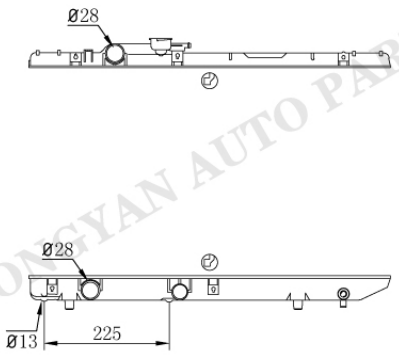

TO-0814AT/MT

Tank size :(R9×4×4.5×33×680)
OEM :
DPI :1381 1427
NISSENS :
APPLICATION :
91-94 TOYOTA TERCEL 1.5L
92-95 TOYOTA PASEO 1.5L

TO-0815

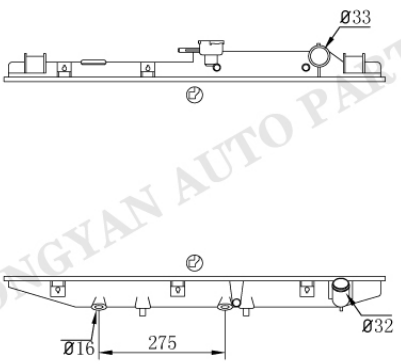

TO-0816AT/MT

Tank size :(R9×4.6×5×48.5×716.8)
OEM :
DPI :21
NISSENS :
APPLICATION :
90-91 LEXUS ES250 2.5L
88-91 TOYOTA CAMRY 2.5L
88-91 TOYOTA CAMRY 2.5L

TO-0817

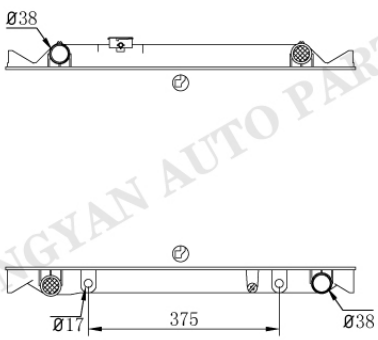

TO-0818AT/MT

Tank size :(R8.5×4×5×54.5×658)
OEM :1640067130 1640067120
DPI :
NISSENS :64637A 64636A
APPLICATION :
96- TOYOTA PRADO

TO-0819

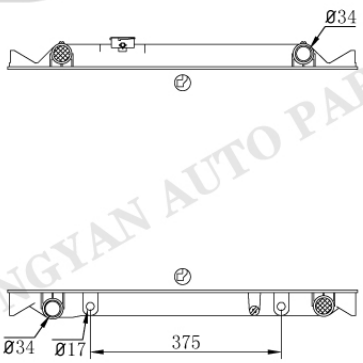

TO-0820AT/MT

Tank size :(R8.5×4×5×54.5×658)
OEM :1640075180 1640075160
DPI :
NISSENS :64755A 64626A
APPLICATION :
96- TOYOTA PRADO

HONGYAN AUTO PARTS

TOYOTA/LEXUS/HINO/SCION

TO-0821

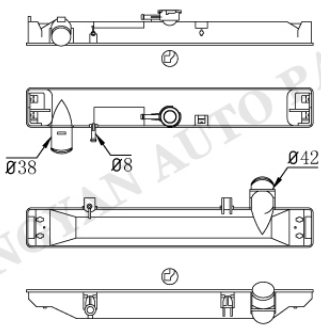

TO-0822

Tank size :(R9×4.5×5×74×539)
OEM :
DPI :
NISSENS :
APPLICATION :

TO-0823

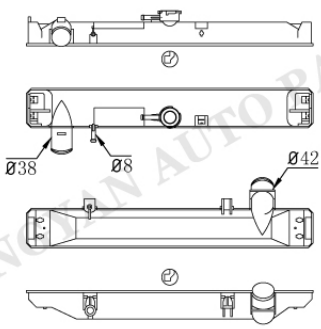

TO-0824

Tank size :(R9×4.5×5×74×539)
OEM :
DPI :
NISSENS :
APPLICATION :

TO-0825

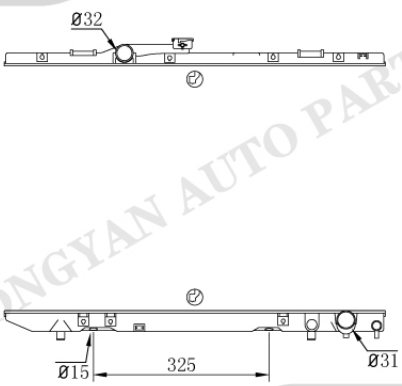

TO-0145AT/MT

Tank size :(R9×4×5×33/48×716)
OEM :
DPI :
NISSENS :
APPLICATION :
90-93 TOYOTA CELICA 2.2L

TO-0728

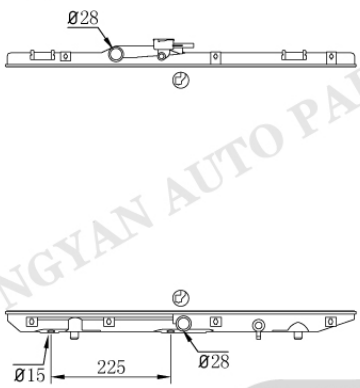

TO-0826AT/MT

Tank size :(R8.5×4×5×48×659)
OEM :
DPI :
NISSENS :
APPLICATION :

HONGYAN AUTO PARTS

TOYOTA/LEXUS/HINO/SCION

TO-0827

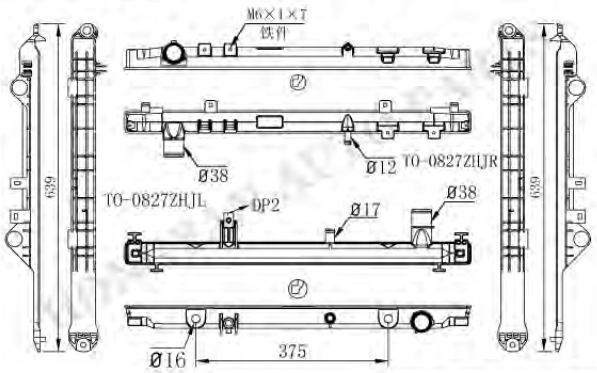

TO-0828AT/MT

Tank size :(R9×4×4.5×44×675)
OEM :
DPI :
NISSENS :
APPLICATION :
16- TOYOTA HILUX REVO

TO-0829

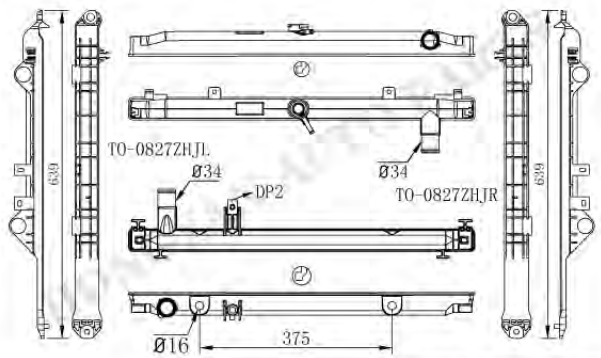

TO-0830AT/MT

Tank size :(R9×4×4.5×44×675)
OEM :
DPI :
NISSENS :
APPLICATION :
16- TOYOTA HILUX

TO-0831

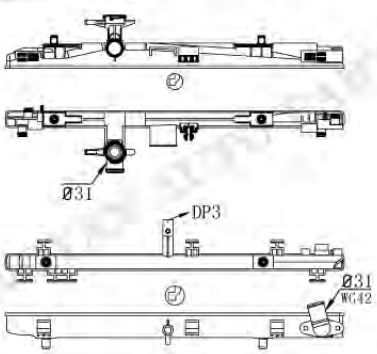

TO-0832

Tank size :(R9×4×5×31.5×637.5)
OEM :
DPI :
NISSENS :
APPLICATION :
TOYOTA YARIS

TO-0833

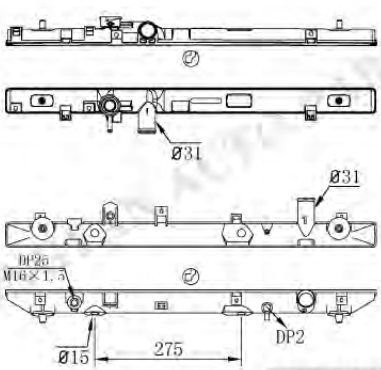

TO-0093AT/MT

Tank size :(R8.5×4×5×33/48×697.5)
OEM :
DPI :
NISSENS :
APPLICATION :
92-94 TOYOTA CAMRY

TOYOTA/LEXUS/HINO/SCION

TO-0834

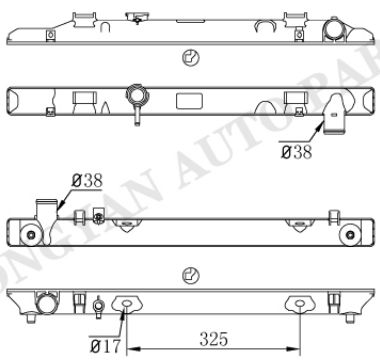

TO-0835AT/MT

Tank size :(R9×4.3×4.6×54×691)
OEM :164006A120
DPI :
NISSENS :
APPLICATION :
96- TOWNACE NORA

TO-0836

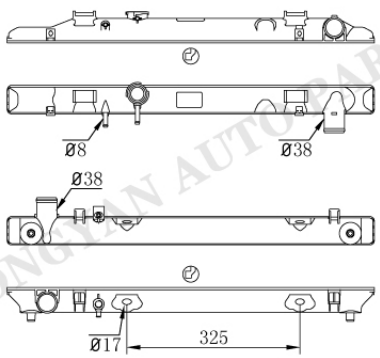

TO-0835AT/MT

Tank size :(R9×4.3×4.6×54×691)
OEM :164006A130
DPI :
NISSENS :
APPLICATION :
96- TOWNACE NORA

TO-0837

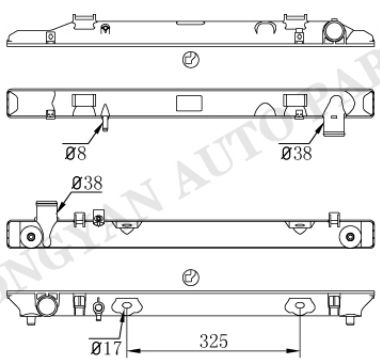

TO-0835AT/MT

Tank size :(R9×4.3×4.6×54×691)
OEM :
DPI :
NISSENS :
APPLICATION :
96- TOWNACE NORA

TO-0838

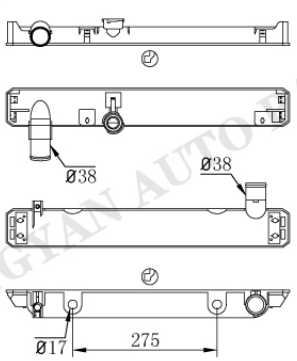

TO-0839AT/MT

Tank size :(R9×4×5×74×540)
OEM :1640067020/030
DPI :
NISSENS :
APPLICATION :
93-98 LANDCRULSER

HONGYAN AUTO PARTS

TOYOTA/LEXUS/HINO/SCION

TO-0840



TO-0841

Tank size :(R8.5×4×4.5×48×290)
OEM :1651030010
DPI :
NISSENS :
APPLICATION :
HIACE(GAS)

TO-0842

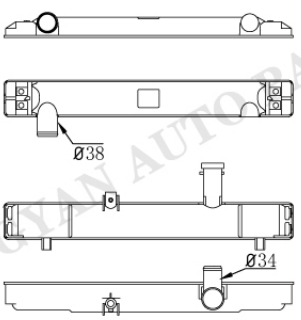

TO-0843

Tank size :(R9×4.5×4.5×69×544)
OEM :
DPI :
NISSENS :
APPLICATION :
TOYOTA DYNA

TO-0844

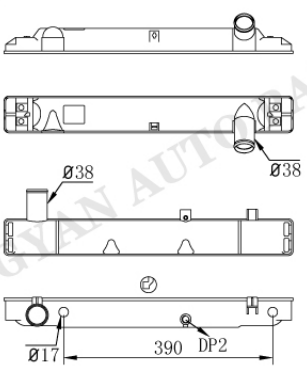

TO-0212AT/MT

Tank size :(R9×4.5×4.5×69×544)
OEM :
DPI :
NISSENS :
APPLICATION :
TOYOTA DYNA

TO-0845

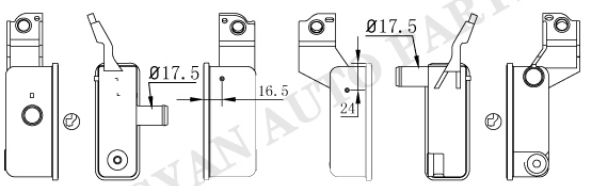

TO-0846

Tank size :(R7.5×4×5×40×105)
OEM :
DPI :
NISSENS :
APPLICATION :

HONGYAN AUTO PARTS

TOYOTA/LEXUS/HINO/SCION

TO-0847

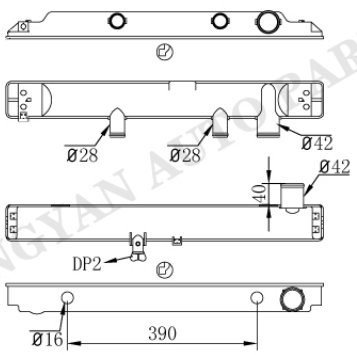

TO-0195AT/MT

Tank size :(R9×5×5×69×597)
OEM :
DPI :
NISSENS :
APPLICATION :
97-99 TOYOTA COASTER

TO-0848

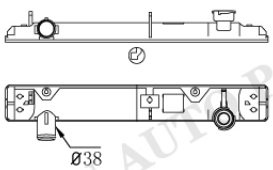

Tank size :(R9×4.5×4.5×69×494)
OEM :
DPI :
NISSENS :
APPLICATION :

TO-0850

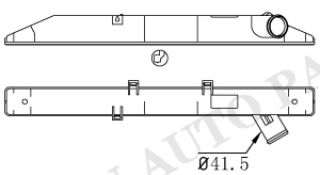

Tank size :(R9×4×4.5×54×582)
OEM :
DPI :
NISSENS :
APPLICATION :
10- HINO

TO-0852

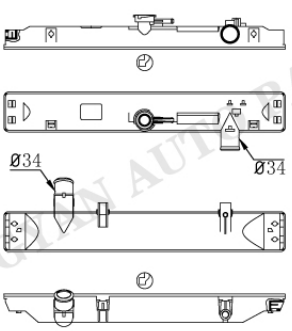

TO-0853

Tank size :(R9×4.5×4.5×75×528.5)
OEM :
DPI :
NISSENS :
APPLICATION :
12- TOYOTA LAND PICKUP

HONGYAN AUTO PARTS

TOYOTA/LEXUS/HINO/SCION

TO-0854

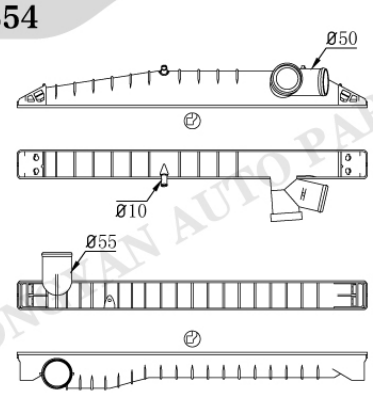

TO-0537

Tank size :(R9×4×4.5×54×658.8)
OEM :
DPI :
NISSENS :
APPLICATION :
99- HINO RAINBOW

TO-0855

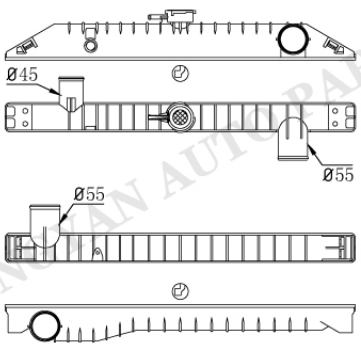

TO-0537

Tank size :(R9×4×4.5×54×658.8)
OEM :
DPI :
NISSENS :
APPLICATION :
99- HINO RAINBOW

TO-0856

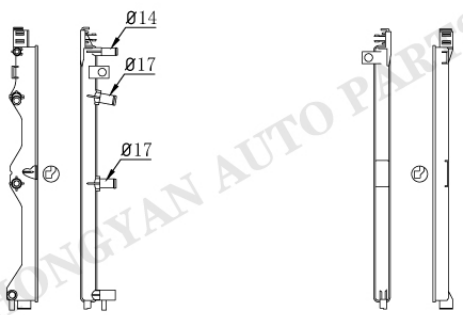

TO-0857

Tank size :(R9×4×4.5×31.5×482.5)
OEM :
DPI :
NISSENS :
APPLICATION :
HIGHLANDER INTERCOOLER

TO-0858

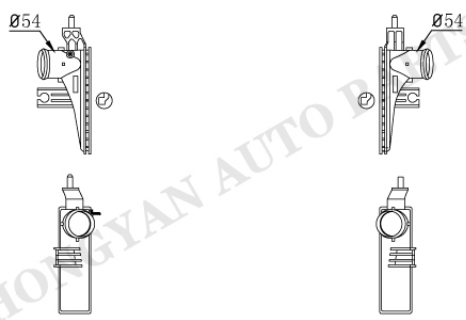

TO-0859

Tank size :(R4×5.5×4.5×63×207)
OEM :
DPI :
NISSENS :
APPLICATION :
15- INTERCOOLER REVO

HONGYAN AUTO PARTS

TOYOTA/LEXUS/HINO/SCION

TO-0860

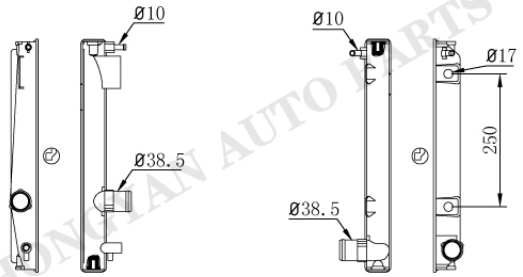

TO-0861AT/MT

Tank size :(R9×4×4.5×48×438.5)
OEM :
DPI :
NISSENS :
APPLICATION :
15- RAV4

TO-0812

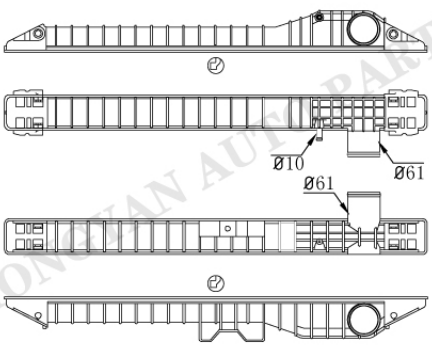

TO-0862

Tank size :(R9×5×4.5×67×795)
OEM :
DPI :
NISSENS :
APPLICATION :
HINO 700HD

TO-0863

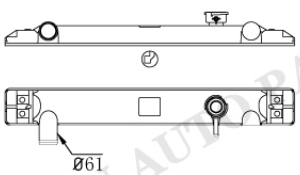

Tank size :(R9×4.5×4.5×69×544)
OEM :
DPI :
NISSENS :
APPLICATION :

TO-0865

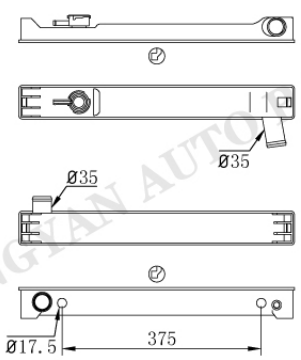

TO-0866AT/MT

Tank size :(R6×5×5×63.5×518.5)
OEM :
DPI :50
NISSENS :
APPLICATION :
89-95 TOYOTA 4RUNNER 3.0L
88-95 TOYOTA PICKUP 3.0L

HONGYAN AUTO PARTS

TOYOTA/LEXUS/HINO/SCION

TO-0867

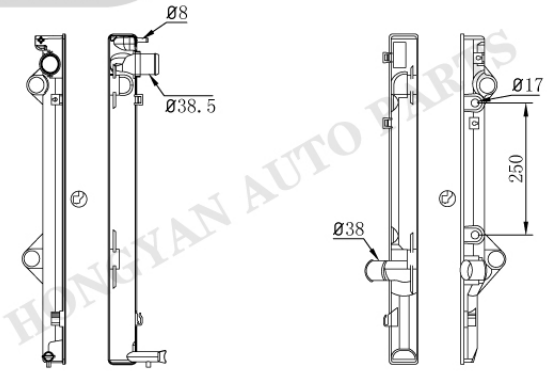

TO-0449AT/MT

Tank size :(R9×4×5×54.5×621)
OEM :
DPI :
NISSENS :
APPLICATION :
03-06 LAND CRUISER PRADO

TO-0868

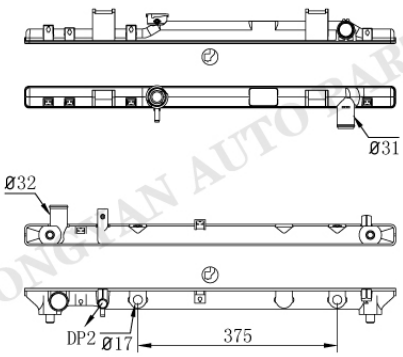

TO-0159AT/MT

Tank size :(R9×4×5×40×697.5)
OEM :164007A380/90/660
DPI :
NISSENS :
APPLICATION :
96-98 TOWNACE NOAH

TO-0869

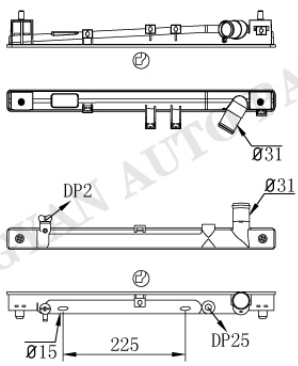

TO-0288AT/MT

Tank size :(R9×4×5×40×505)
OEM :1640021080 1640021070
DPI :2304 2305
NISSENS :64798 64799
APPLICATION :
00-05 TOYOTA ECHO 1.5L
04-06 SCION XA 1.5L

TO-0870

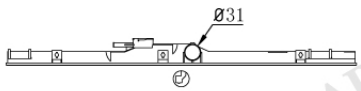

Tank size :(R9×4×5×47.6×659)
OEM :
DPI :
NISSENS :
APPLICATION :

HONGYAN AUTO PARTS

TOYOTA/LEXUS/HINO/SCION

TO-0872

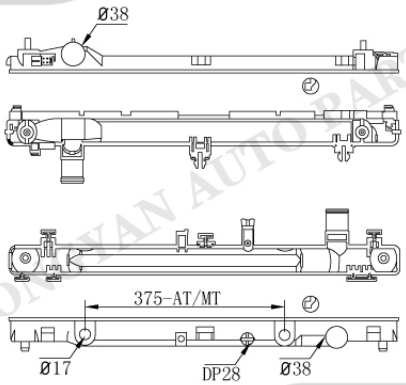

TO-0873AT/MT

Tank size :(R9×4.5×4.5×44×732.5)
OEM :
DPI :
NISSENS :
APPLICATION :

TO-0874

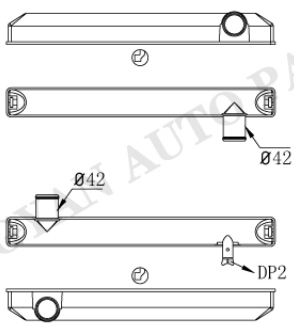

TO-0875

Tank size :(R9×4×5×55×505.5)
OEM :
DPI :
NISSENS :
APPLICATION :
TOYOTA

Tank size :
OEM :
DPI :
NISSENS :
APPLICATION :

Tank size :
OEM :
DPI :
NISSENS :
APPLICATION :

HONGYAN AUTO PARTS

TOYOTA/LEXUS/HINO/SCION

	Tank size : OEM : DPI : NISSENS : APPLICATION :
	Tank size : OEM : DPI : NISSENS : APPLICATION :
	Tank size : OEM : DPI : NISSENS : APPLICATION :
	Tank size : OEM : DPI : NISSENS : APPLICATION :

HONGYAN AUTO PARTS

VOLKSWAGEN

VW-0001

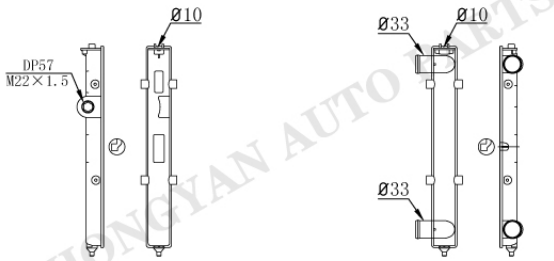

VW-0002

Tank size :(R5×4×5×47.5×378)
OEM :1H0121253AK 1H0121253P
1HM121253 1HM121253C/G/P
DPI :1622
NISSENS :
APPLICATION :
93-98 VOLKSWAGEN GOLF 1.8L
93-95 VOLKSWAGEN JETTA 1.8L

VW-0001

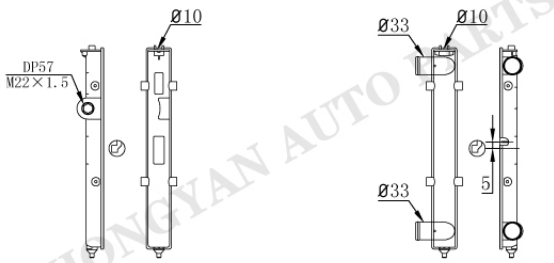

VW-0003

Tank size :(R5×4×5×47.5×378)
OEM :
DPI :
NISSENS :
APPLICATION :
93-98 VOLKSWAGEN GOLF 1.8L
93-95 VOLKSWAGEN JETTA 1.8L

VW-0004

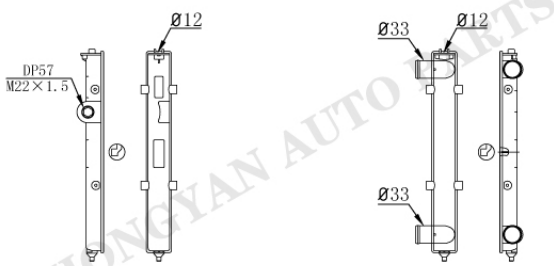

VW-0005

Tank size :(R5×4×5×47.5×378)
OEM :1H0121253BA/D/K/M
DPI :
NISSENS :652471 65246A
APPLICATION :
93-98 VOLKSWAGEN GOLF 1.6/1.8L
93-95 VOLKSWAGEN JETTA 1.6/1.8L

VW-0004

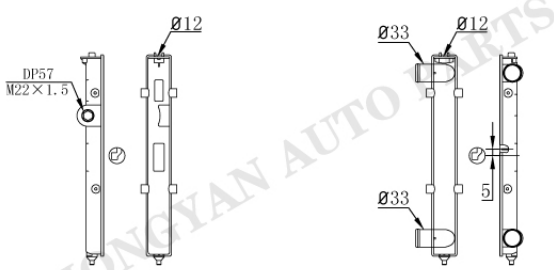

VW-0006

Tank size :(R5×4×5×47.5×378)
OEM :
DPI :
NISSENS :652471 65246A
APPLICATION :
93-98 VOLKSWAGEN GOLF 1.6/1.8L
93-95 VOLKSWAGEN JETTA 1.6/1.8L

HONGYAN AUTO PARTS

VOLKSWAGEN

VW-0007

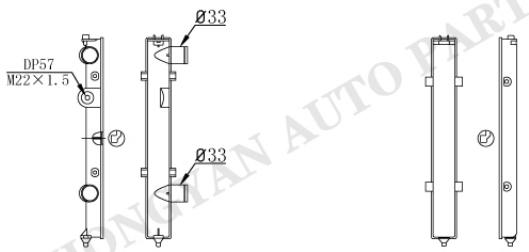

VW-0008

Tank size :(R5×4×5×47.5×378)
OEM :1H0121253CB 1H0121253L
6K0121253AA 6N0121253M
DPI :
NISSENS :652451 651871 651851
APPLICATION :
92-97 VOLKSWAGEN GOLF 1.4/1.6/1.8L
91-95 VOLKSWAGEN PASSAT 1.4/1.6/1.8L
91-95 VOLKSWAGEN POLO 1.4/1.6/1.8L

VW-0009

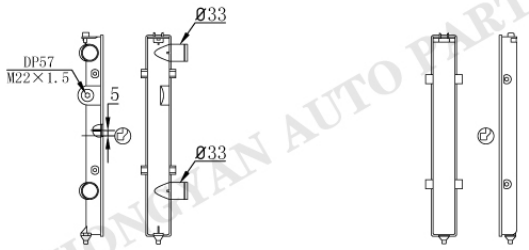

VW-0008

Tank size :(R5×4×5×47.5×378)
OEM :
DPI :
NISSENS :
APPLICATION :
92-97 VOLKSWAGEN GOLF 1.4/1.6/1.8L
91-95 VOLKSWAGEN PASSAT 1.4/1.6/1.8L
91-95 VOLKSWAGEN POLO 1.4/1.6/1.8L

VW-0010

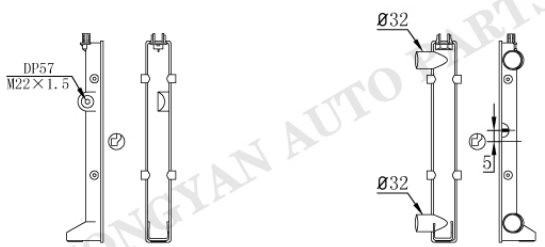

VW-0011

Tank size :(R5×4×5×47.5×378)
OEM :1HM121253A/C/K/Q/R
DPI :1557
NISSENS :65266
APPLICATION :
95-02 VOLKSWAGEN CABRIO 2.0L
92-93 VOLKSWAGEN CABRIOLET 1.8L
93-98 VOLKSWAGEN GOLG 1.8/1.9/2.0L

VW-0012

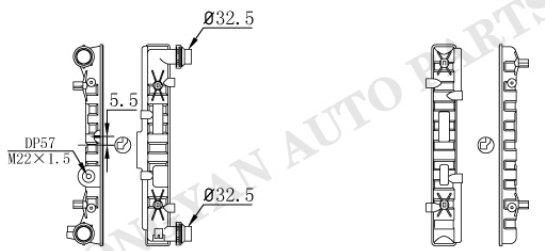

VW-0013

Tank size :(R5×4×5.6×47.5×378)
OEM : 0K2A615200G/J 1C0121253A/C
DPI :2241 13048
NISSENS :65228
APPLICATION :
99-11 VOLKSWAGEN 1.9/1.8/2.0L

HONGYAN AUTO PARTS

VOLKSWAGEN

VW-0014

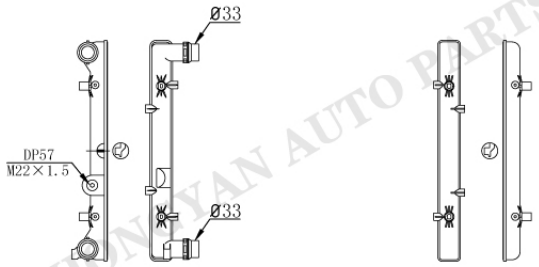

VW-0015

Tank size :(R11.5×4×5×42.5×415)
OEM :1E0121253 1J0121253AD/AT
1J0121253C/L/N/P/Q/R
DPI :2265 2360
NISSENS :652011
APPLICATION :
00-03 AUDI A3 1.8/2.0L
99-06 AUDI TT 1.8L
11-15 VOLKSWAGEN CLASICO 2.0L
00-07 VOLKSWAGEN GOLF 2.0L

VW-0016

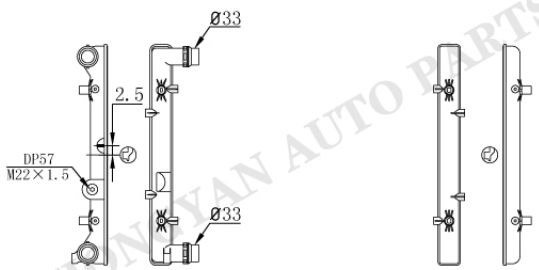

VW-0015

Tank size :(R11.5×4×5×42.5×415)
OEM :
DPI :
NISSENS :
APPLICATION :
00-03 AUDI A3 1.8/2.0L
99-06 AUDI TT 1.8L
11-15 VOLKSWAGEN CLASICO 2.0L
00-07 VOLKSWAGEN GOLF 2.0L

VW-0017

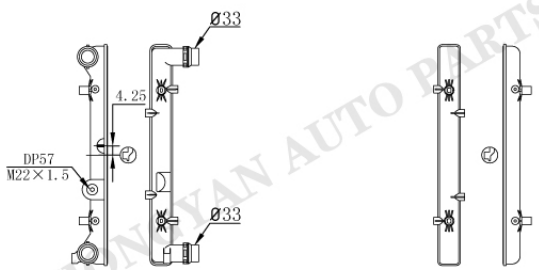

VW-0015

Tank size :(R11.5×4×5×42.5×415)
OEM :
DPI :
NISSENS :
APPLICATION :
00-03 AUDI A3 1.8/2.0L
99-06 AUDI TT 1.8L
11-15 VOLKSWAGEN CLASICO 2.0L
00-07 VOLKSWAGEN GOLF 2.0L

VW-0018

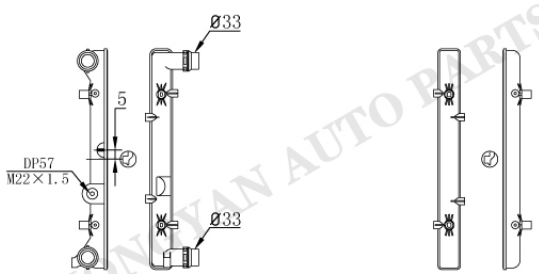

VW-0015

Tank size :(R11.5×4×5×42.5×415)
OEM :
DPI :
NISSENS :
APPLICATION :
00-03 AUDI A3 1.8/2.0L
99-06 AUDI TT 1.8L
11-15 VOLKSWAGEN CLASICO 2.0L
00-07 VOLKSWAGEN GOLF 2.0L

HUNGYAN AUTO PARTS

VOLKSWAGEN

VW-0019

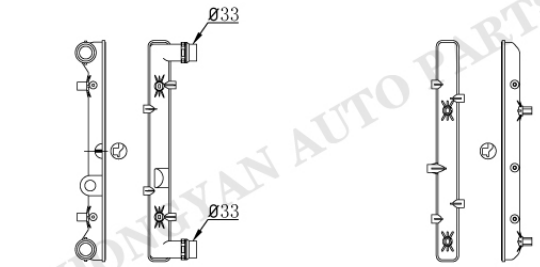

VW-0020

Tank size :(R11.5×4×5×42.5×415)
OEM :6Q0121253AE/G 6Q0121253J
6QE121253
DPI :
NISSENS :652691 65269A
APPLICATION :
02-07 VOLKSWAGEN DERBY
05-10 VOLKSWAGEN FOX
01-09 VOLKSWAGEN POLO
99-08 SKODA FABIA

VW-0021

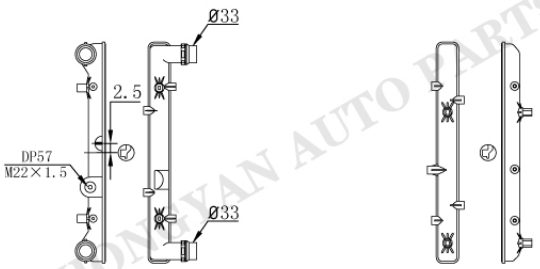

VW-0020

Tank size :(R11.5×4×5×42.5×415)
OEM :
DPI :
NISSENS :
APPLICATION :
02-07 VOLKSWAGEN DERBY
05-10 VOLKSWAGEN FOX
01-09 VOLKSWAGEN POLO
99-08 SKODA FABIA

VW-0022

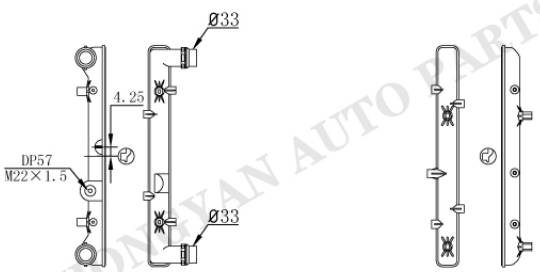

VW-0020

Tank size :(R11.5×4×5×42.5×415)
OEM :
DPI :
NISSENS :
APPLICATION :
02-07 VOLKSWAGEN DERBY
05-10 VOLKSWAGEN FOX
01-09 VOLKSWAGEN POLO
99-08 SKODA FABIA

VW-0023

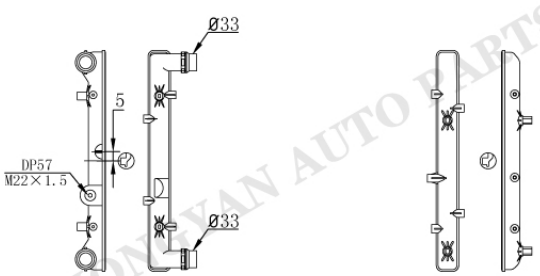

VW-0020

Tank size :(R11.5×4×5×42.5×415)
OEM :
DPI :
NISSENS :
APPLICATION :
02-07 VOLKSWAGEN DERBY
05-10 VOLKSWAGEN FOX
01-09 VOLKSWAGEN POLO
99-08 SKODA FABIA

HONGYAN AUTO PARTS

VOLKSWAGEN

VW-0024

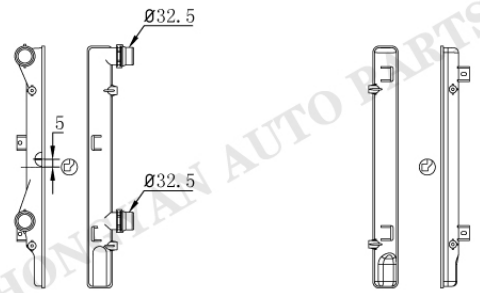

VW-0025

Tank size :(R11.5×4×5×47×454)
OEM :1K0121251BB/CS 1K0121251L
1K0121253L 5K0121251J/B
DPI :13212/13235
NISSENS :65279A
APPLICATION :
04-15 AUDI A3 1.9L(DIESEL)
09-15 AUDI TT 1.9L(DIESEL)
09-15 VOLKSWAGEN CC 1.9L(DIESEL)
09-15 VOLKSWAGEN GOLF 1.9L(DIESEL)
08-15 VOLKSWAGEN JETTA 1.9L(DIESEL)

VW-0026

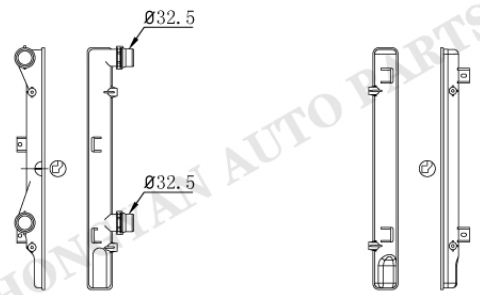

VW-0025

Tank size :(R11.5×4×5×47×454)
OEM :
DPI :
NISSENS :
APPLICATION :
04-15 AUDI A3 1.9L(DIESEL)
09-15 AUDI TT 1.9L(DIESEL)
09-15 VOLKSWAGEN CC 1.9L(DIESEL)
09-15 VOLKSWAGEN GOLF 1.9L(DIESEL)
08-15 VOLKSWAGEN JETTA 1.9L(DIESEL)

VW-0024

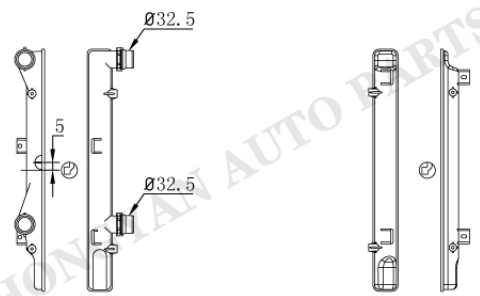

VW-0027

Tank size :(R11.5×4×5×47×454)
OEM :
DPI :
NISSENS :
APPLICATION :
VOLKSWAGEN

VW-0026

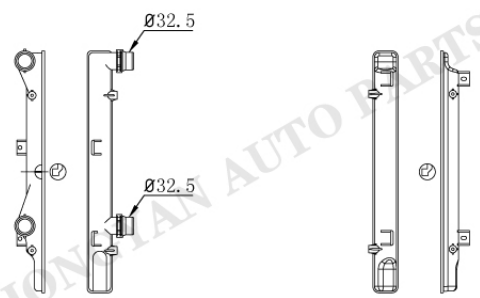

VW-0027

Tank size :(R11.5×4×5×47×454)
OEM :
DPI :
NISSENS :
APPLICATION :
VOLKSWAGEN

HONGYAN AUTO PARTS

VOLKSWAGEN

VW-0028

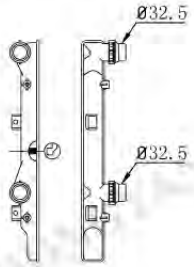



VW-0029

Tank size :(R11.5×4×5×42.5×415)
OEM :1K0121251AA/AT/CD/DL/DN
DPI :
NISSENS :65280A
APPLICATION :
03-13 AUDI A3 1.9L(DIESEL)
08-13 AUDI TT 1.9L(DIESEL)
11-15 VOLKSWAGEN CC 1.9L(DIESEL)
03-15 VOLKSWAGEN GOLF 1.9L(DIESEL)
05-15 VOLKSWAGEN JETTA 1.9L(DIESEL)
05-15 VOLKSWAGEN PASSAT 1.9L(DIESEL)

VW-0030

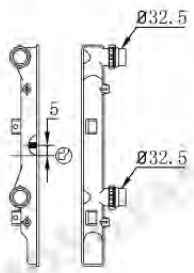



VW-0029

Tank size :(R11.5×4×5×42.5×415)
OEM :
DPI :
NISSENS :
APPLICATION :
03-13 AUDI A3 1.9L(DIESEL)
08-13 AUDI TT 1.9L(DIESEL)
11-15 VOLKSWAGEN CC 1.9L(DIESEL)
03-15 VOLKSWAGEN GOLF 1.9L(DIESEL)
05-15 VOLKSWAGEN JETTA 1.9L(DIESEL)
05-15 VOLKSWAGEN PASSAT 1.9L(DIESEL)

VW-0031

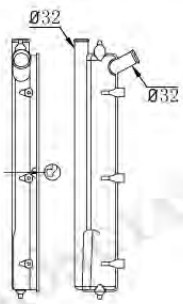

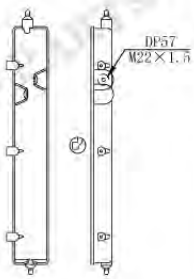

VW-0032

Tank size :(R4×4.5×5×66.5×445)
OEM :068121253B/C/D/E
DPI :357
NISSENS :65239
APPLICATION :
80-91 VOLKSWAGEN VANAGON 1.9/2.0/2.1L
85-94 VOLKSWAGEN TRANSPORTER 1.9/2.1/2.5L

VW-0031

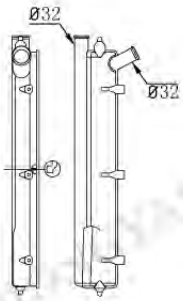

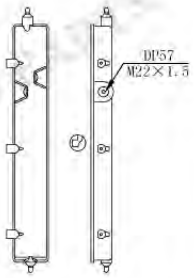

VW-0033

Tank size :(R4×4.5×5×66.5×445)
OEM :
DPI :
NISSENS :
APPLICATION :
80-91 VOLKSWAGEN VANAGON 1.9/2.0/2.1L
85-94 VOLKSWAGEN TRANSPORTER 1.9/2.1/2.5L

VOLKSWAGEN

VW-0014

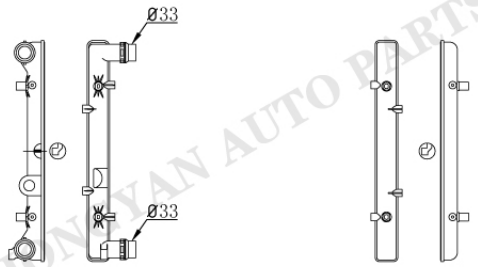

VW-0034

Tank size :(R11.5×4×5×42.5×415)
OEM :
DPI :
NISSENS :
APPLICATION :
00-03 AUDI A3 1.8/2.0L
99-06 AUDI TT 1.8L
11-15 VOLKSWAGEN CLASICO 2.0L
00-07 VOLKSWAGEN GOLF 2.0L

VW-0035

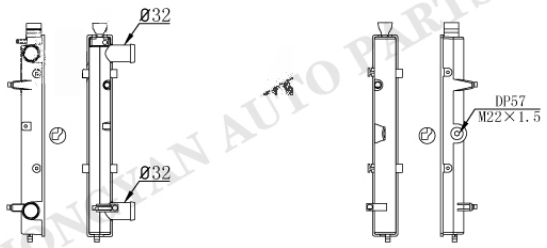

VW-0036

Tank size :(R5×4×5×47.5×378)
OEM :701121253F 701121253K
DPI :2098
NISSENS :65273A
APPLICATION :
93-04 VOLKSWAGEN EUROVAN 1.5L

VW-0037

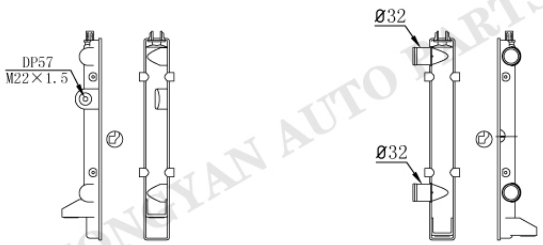

VW-0038

Tank size :(R5×4×5×47.5×378)
OEM :3A0121253AA
DPI :
NISSENS :65253
APPLICATION :
93-97 VOLKSWAGEN PASSAT 1.8/2.0L

VW-0039

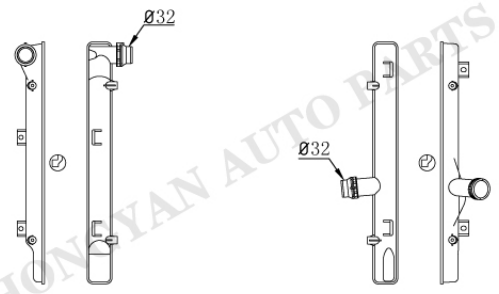

VW-0040

Tank size :(R11.5×4×5×47×454)
OEM :1K0121251AB/BK/DM
1K0121251N
DPI :2822
NISSENS :65281A
APPLICATION :
04-08 AUDI A3 2.0L
07-14 AUDI TT 1.8/2.0L
09-11 VOLKSWAGEN EOS 2.0L

HONGYAN AUTO PARTS

VOLKSWAGEN

VW-0041

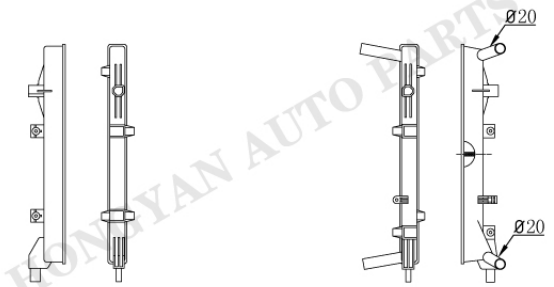

VW-0042

Tank size :(R5.5×4×5×35.5×412)
OEM :
DPI :
NISSENS :
APPLICATION :

VW-0043

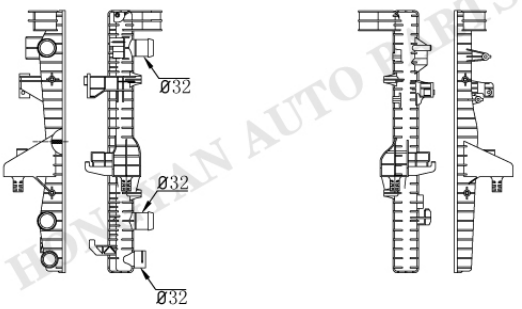

VW-0044

Tank size :(R8×4×5.5×48×492)
OEM :7H0121253F/K
DPI :
NISSENS :
APPLICATION :
03-09 VOLKSWAGEN TRANSPORTER 1.9/2.0/3.2L

VW-0045

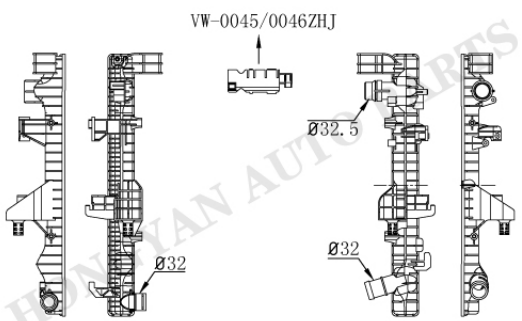

VW-0046

Tank size :(R8.5×4×5.5×50×492)
OEM :7H0121253G 7H0121253J
DPI :
NISSENS :65283A
APPLICATION :
03-09 VOLKSWAGEN KOMBI 2.5L(DIESEL)
03-09 VOLKSWAGEN MULTIVAN 2.5L(DIESEL)
03-09 VOLKSWAGEN TRANSPORTER 2.5L(DIESEL)

Tank size :
OEM :
DPI :
NISSENS :
APPLICATION :

HONGYAN AUTO PARTS

VOLKSWAGEN

VW-0049

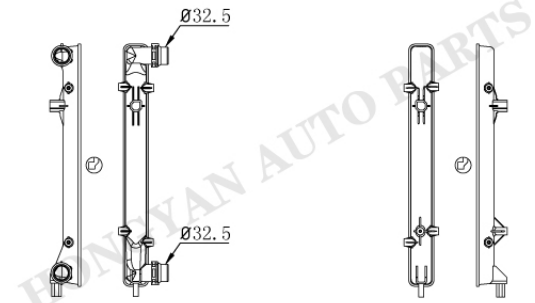

VW-0050

Tank size :(R11.5×4×5×47×455)
OEM :1K0121251K 5K0121251H
DPI :
NISSENS :65308
APPLICATION :
10- VOLKSWAGEN PASSAT 3.2/3.6L
05- VOLKSWAGEN JETTA 2.5L
06- VOLKSWAGEN EOS 3.2/3.6L

VW-0051

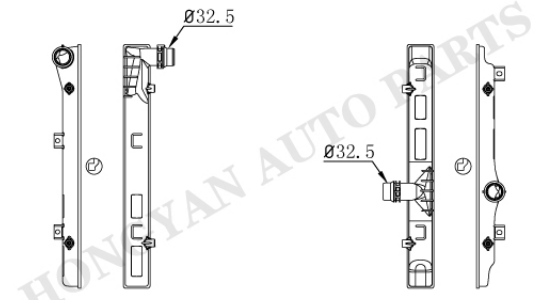

VW-0052

Tank size :(R4.5×4×5×50×457.5)
OEM :1K0121253BJ
DPI :
NISSENS :65309
APPLICATION :
05- VOLKSWAGEN PASSAT 2.5L(DIESEL)

VW-0053

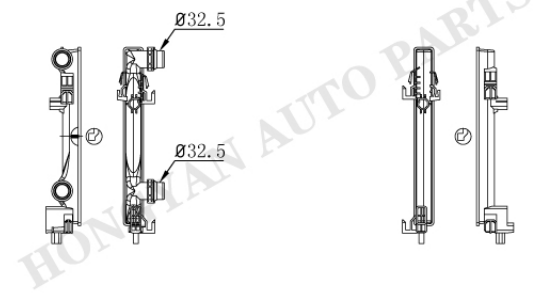

VW-0054

Tank size :(R6×4.2×5×37.5×335)
OEM :5Q0121251EC
DPI :
NISSENS :64106
APPLICATION :
12-15 AUDI A3
12-15 SKODA OCTAVIA

VW-0055

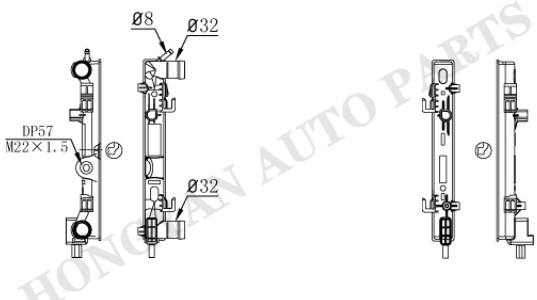

VW-0056

Tank size :(R5.5×4×5×41×340)
OEM :6R0121253 6R0121253A
6R0121253L 6RF121253
DPI :
NISSENS :640012
APPLICATION :
10-15 AUDI A1
09-15 VOLKSWAGEN POLO
10-15 VOLKSWAGEN VENTO

HONGYAN AUTO PARTS

VOLKSWAGEN

VW-0057

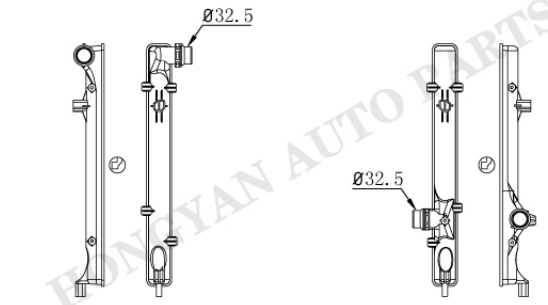

VW-0058

Tank size :(R11.5×4×5×47×455)
OEM :
DPI :
NISSENS :60352
APPLICATION :
13-15 AUDI Q3
11-12 AUDI RS3
09-15 AUDI TT

VW-0059



VW-0060

Tank size :(R4.5×4×6×47×322.5)
OEM :
DPI :
NISSENS :
APPLICATION :
85-90 VOLKSWAGEN JETTA
85-90 VOLKSWAGEN SANTANA

VW-0061



VW-0060

Tank size :(R4.5×4×6×47×322.5)
OEM :
DPI :
NISSENS :
APPLICATION :
85-90 VOLKSWAGEN JETTA
85-90 VOLKSWAGEN SANTANA

VW-0062



VW-0063

Tank size :(R4.5×4×5×48×377)
OEM :
DPI :
NISSENS :
APPLICATION :
95-02 VOLKSWAGEN CABRIO 2.0L
92-93 VOLKSWAGEN CABRIOLET 1.8L
93-98 VOLKSWAGEN GOLG 1.8/1.9/2.0L

HONGYAN AUTO PARTS

VOLKSWAGEN

VW-0064



VW-0065

Tank size : (R4.5×4.5×4×47×322.5)
OEM :
DPI :
NISSENS :
APPLICATION :
85-90 VOLKSWAGEN JETTA

VW-0066



VW-0065

Tank size : (R4.5×4.5×4×47×322.5)
OEM :
DPI :
NISSENS :
APPLICATION :
85-90 VOLKSWAGEN JETTA

VW-0067



VW-0065

Tank size : (R4.5×4.5×4×47×322.5)
OEM :
DPI :
NISSENS :
APPLICATION :
85-90 VOLKSWAGEN JETTA

VW-0068



VW-0065

Tank size : (R4.5×4.5×4×47×322.5)
OEM :
DPI :
NISSENS :
APPLICATION :
85-90 VOLKSWAGEN JETTA

HONGYAN AUTO PARTS

VOLKSWAGEN

VW-0069



VW-0070

Tank size :(R11×4×5×42.5×415)
OEM :
DPI :
NISSENS :
APPLICATION :
05- VOLKSWAGEN FOX

VW-0071



VW-0070

Tank size :(R11×4×5×42.5×415)
OEM :
DPI :
NISSENS :
APPLICATION :
05- VOLKSWAGEN FOX

VW-0072



VW-0073

Tank size :(R11.5×4×5×47×454)
OEM :5N0121253L
DPI :13272
NISSENS :65015
APPLICATION :
09-15 VOLKSWAGEN TIGUAN 1.4/2.0L
09-15 VOLKSWAGEN SHATAN 1.4/2.0L

VW-0074



VW-0075

Tank size :(R6×4×4.5×48×530)
OEM :
DPI :
NISSENS :
APPLICATION :
VOLKSWAGEN

HONGYAN AUTO PARTS

VOLKSWAGEN

VW-0076

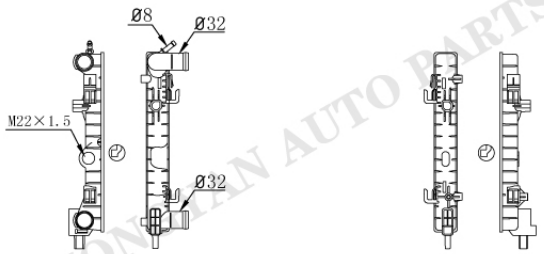

VW-0077

Tank size :(R4.5×4×5×43×337)
OEM :
DPI :
NISSENS :640012
APPLICATION :
10-15 AUDI A1
09-15 VOLKSWAGEN POLO
10-15 VOLKSWAGEN VENTO

VW-0019

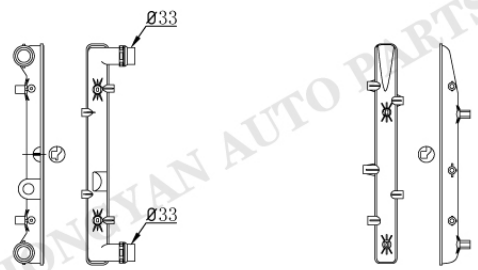

VW-0078

Tank size :(R11.5×4×5×42.5×415)
OEM :
DPI :
NISSENS :
APPLICATION :
01-09 VOLKSWAGEN POLO

VW-0079

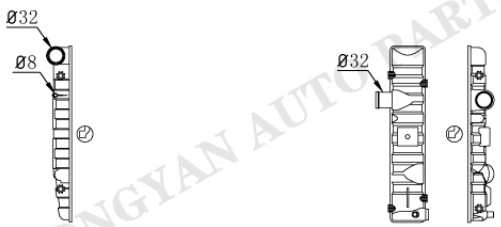

VW-0080

Tank size :(R8×4.5×6×60×330.5)
OEM :
DPI :
NISSENS :
APPLICATION :
VOLKSWAGEN GOL

VW-0079

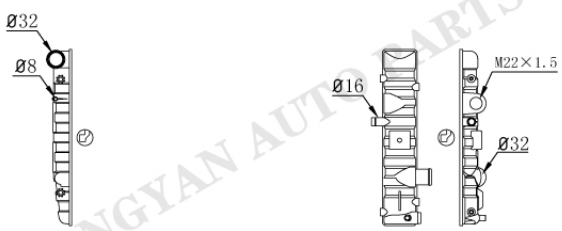

VW-0081

Tank size :(R8×4.5×6×60×330.5)
OEM :
DPI :
NISSENS :
APPLICATION :
VOLKSWAGEN GOL

HONGYAN AUTO PARTS

VOLKSWAGEN

VW-0082

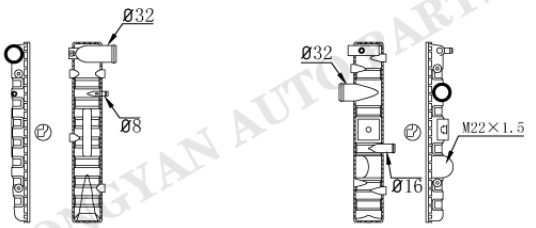

VW-0083

Tank size :(R5×4×5×55×338)
OEM :
DPI :
NISSENS :
APPLICATION :
VOLKSWAGEN GOL

VW-0082

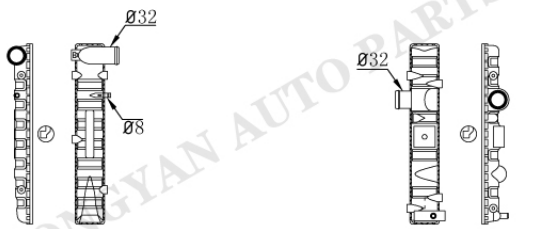

VW-0084

Tank size :(R5×4×5×55×338)
OEM :
DPI :
NISSENS :
APPLICATION :
VOLKSWAGEN GOL

VW-0085

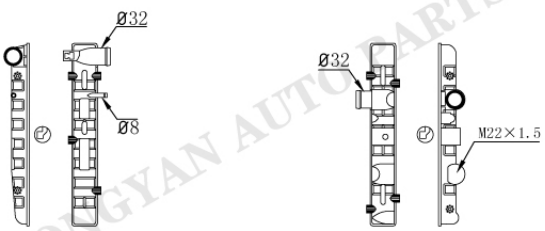

VW-0086

Tank size :(R5×4.5×4.5×48×343)
OEM :
DPI :
NISSENS :
APPLICATION :
97-08 VOLKSWAGEN GOL
97-08 VOLKSWAGEN PATAT
97-08 VOLKSWAGEN SAVEIRO

VW-0085

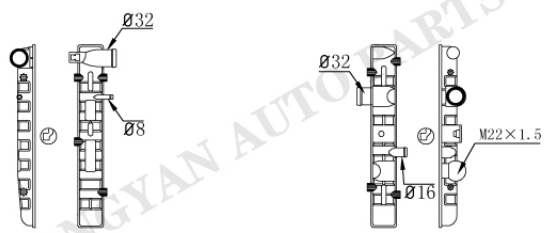

VW-0087

Tank size :(R5×4.5×4.5×48×343)
OEM :
DPI :
NISSENS :
APPLICATION :
95-08 VOLKSWAGEN GOL
95-08 VOLKSWAGEN PATAT
95-08 VOLKSWAGEN SAVEIRO

HONGYAN AUTO PARTS

VW-14

VOLKSWAGEN

VW-0088

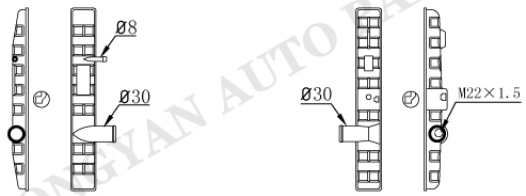

VW-0089

Tank size :(R5×4.5×4.5×48×343)
OEM :
DPI :
NISSENS :
APPLICATION :
87-94 VOLKSWAGEN GOL
87-94 VOLKSWAGEN PATAT
87-94 VOLKSWAGEN SAVEIRO

VW-0090

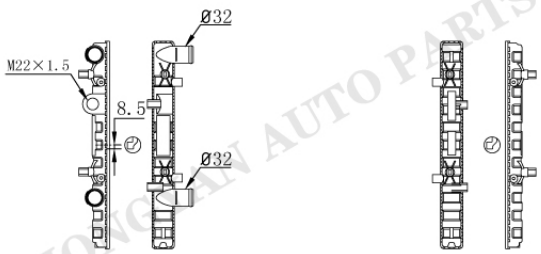

VW-0091

Tank size : (R6×4×4.5×41.5×388.5)
OEM :6K0121253AG/BC/AM
DPI :
NISSENS :67301 67302
APPLICATION :
00-03 VOLKSWAGEN CADDY

VW-0092

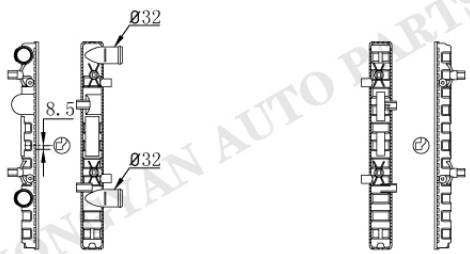

VW-0091

Tank size : (R6×4×4.5×41.5×388.5)
OEM :
DPI :
NISSENS :
APPLICATION :
00-03 VOLKSWAGEN CADDY

VW-0093

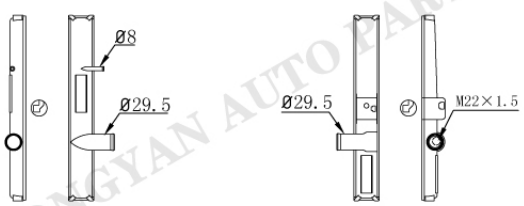

VW-0094

Tank size : (R5×5.2×5×47.5×344.5)
OEM :
DPI :
NISSENS :
APPLICATION :
87-94 VOLKSWAGEN GOL
87-94 VOLKSWAGEN PATAT
87-94 VOLKSWAGEN SAVEIRO

HONGYAN AUTO PARTS

VW-15

VOLKSWAGEN

VW-0095

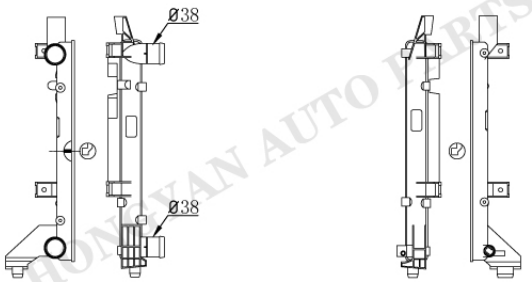

VW-0096

Tank size :(R9×4×5×43×415)
OEM :2D0121253 2D0121253B/E
DPI :
NISSENS :65231A
APPLICATION :
96-06 VOLKSWAGEN LT 2.3/2.5/2.8L

VW-0097

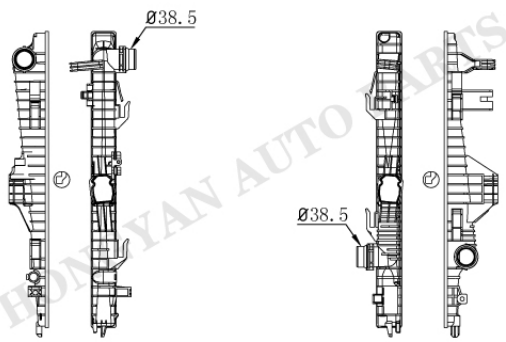

VW-0098

Tank size : (R5.5×4×5.5×47.7×556)
OEM :7P0121253A 95810613210
DPI :
NISSENS :65297
APPLICATION :
10-15 VOLKSWAGEN TOUAREG 3.0/3.6L
10-15 PORSCHE CAYENNE 3.0/3.6L

VW-0099

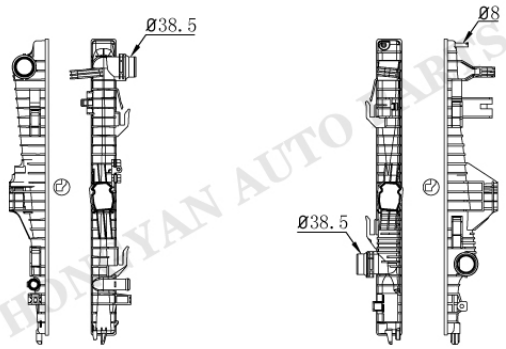

VW-0100

Tank size :(R5.5×4×5.5×47.7×556)
OEM :7P0121253A 95810613210
DPI :
NISSENS :65279 65299
APPLICATION :
10-15 VOLKSWAGEN TOUAREG 3.0/3.6L
10-15 PORSCHE CAYENNE 3.0/3.6L

VW-0101

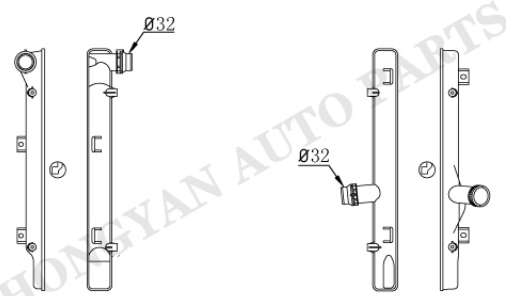

VW-0102

Tank size :(R6.5×5.2×5.5×50×457)
OEM :
DPI :2822
NISSENS :
APPLICATION :
04-08 AUDI A3 2.0L
07-14 AUDI TT 1.8/2.0L
09-11 VOLKSWAGEN EOS 2.0L

HONGYAN AUTO PARTS

VOLKSWAGEN

VW-0103

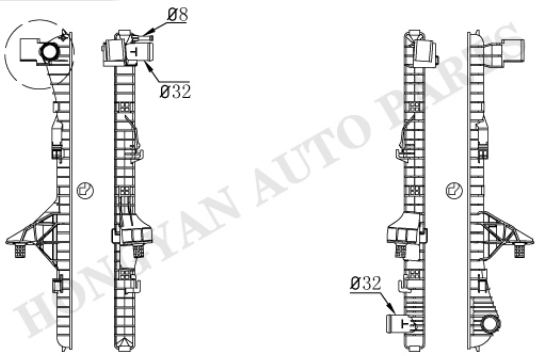

VW-0104

Tank size :(R9×4×5×38.5×595)
OEM :2H0121253A
DPI :
NISSENS :65298
APPLICATION :
10-15 VOLKSWAGEN AMAROK 2.0L

VW-0105

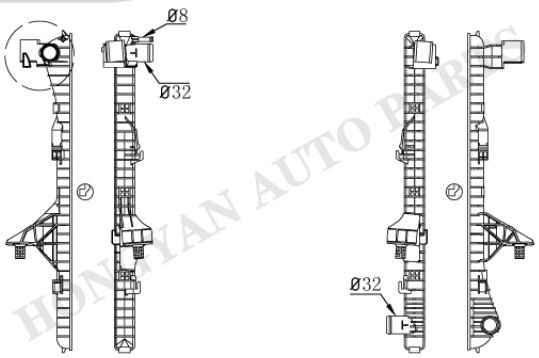

VW-0104

Tank size :(R9×4×5×38.5×595)
OEM :2H0121253A
DPI :
NISSENS :65298
APPLICATION :
10-15 VOLKSWAGEN AMAROK 2.0L

VW-0106

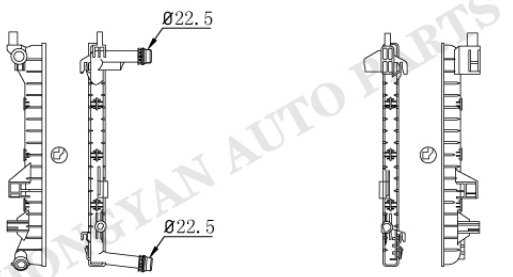

VW-0107

Tank size :(R4.5×3.5×5.1×29.2×418.7)
OEM :
DPI :
NISSENS :
APPLICATION :

VW-0108

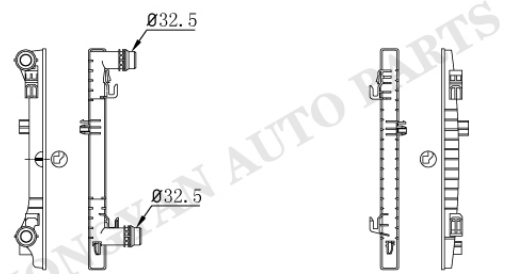

VW-0109

Tank size :(R4.5×3×5.5×33×414.7)
OEM :5Q0121251EM/ER/GQ/GD/KK
DPI :13517
NISSENS :65303 65306
APPLICATION :
15- VOLKSWAGEN GOLF 2.0L

VW-17

HONGYAN AUTO PARTS

VOLKSWAGEN

VW-0110

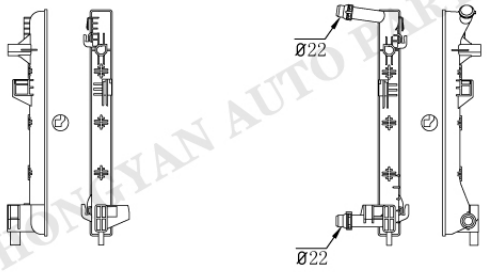

VW-0111

Tank size :(R4.5×3×5×41.5×425)
OEM :5Q0121251FB
DPI :
NISSENS :65328
APPLICATION :
12- VOLKSWAGEN GOLF VII

VW-0110

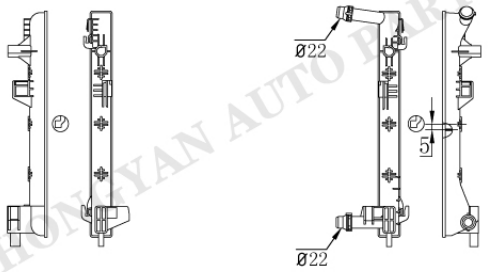

VW-0111-1

Tank size :(R4.5×3×5×41.5×425)
OEM :5Q0121251FB
DPI :
NISSENS :65328
APPLICATION :
12- VOLKSWAGEN GOLF VII

VW-0112

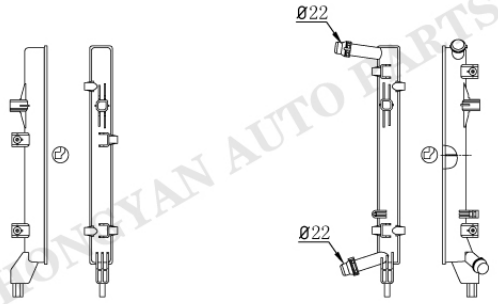

VW-0113

Tank size :(R4.5×4×5×42.5×410)
OEM :1K0121251BN
DPI :
NISSENS :65294
APPLICATION :
07-15 GOLF/JETTA/PASSAT 1.4L T

VW-0114

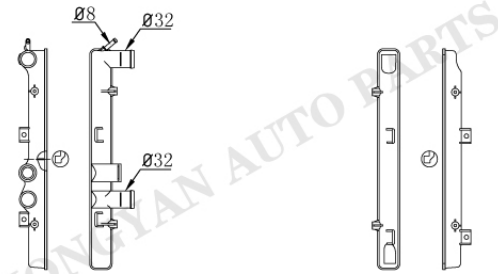

VW-0115

Tank size :(R11×4×5×42×415)
OEM :
DPI :
NISSENS :
APPLICATION :
VOLKSWAGEN

HONGYAN AUTO PARTS

VOLKSWAGEN

VW-0116

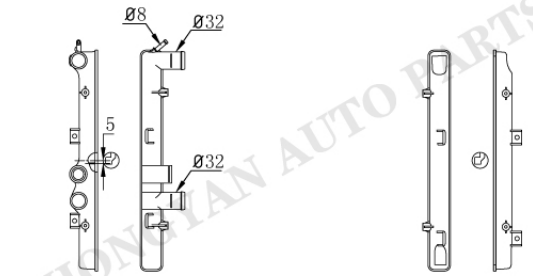

VW-0115

Tank size :(R11×4×5×42×415)
OEM :
DPI :
NISSENS :
APPLICATION :
VOLKSWAGEN

VW-0117



VW-0118

Tank size :(R11×4×5×42.5×415.5)
OEM :6Q0121253J
DPI :
NISSENS :65289A
APPLICATION :
01- VOLKSWAGEN POLO 1.2/1.4/1.6L
99- SKODA FABIA

VW-0119



VW-0120

Tank size :(R6.5×5×5×38.5×325)
OEM :
DPI :
NISSENS :
APPLICATION :
VOLKSWAGEN

VW-0121

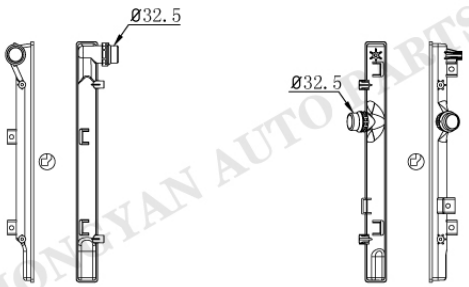

VW-0122

Tank size :(R5.5×4×5.5×42×451.5)
OEM :
DPI :
NISSENS :
APPLICATION :
VOLKSWAGEN TIGUAN

HONGYAN AUTO PARTS

VW-19

VOLKSWAGEN

VW-0123

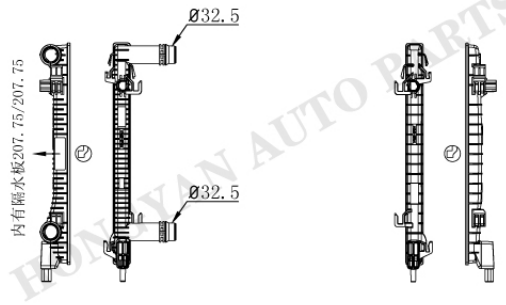

VW-0124

Tank size :(R4.5×3×5.5×33.5×415.5)
OEM :
DPI :
NISSENS :
APPLICATION :
14- VOLKSWAGEN GOLF7 1.6L

VW-0125

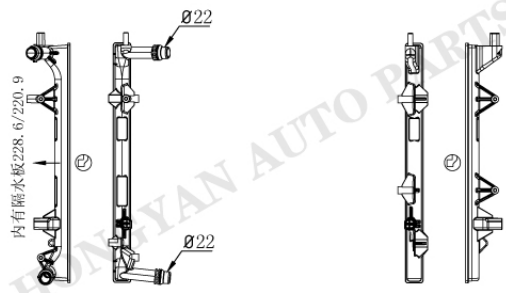

VW-0126

Tank size :(R4.5×4.5×5×34×449.5)
OEM :1K0121251EB
DPI :13273
NISSENS :65017
APPLICATION :
10-15 VOLKSWAGEN JETTA IV 1.4LT
13-15 VOLKSWAGEN PASSAT 2.0LT
12-14 VOLKSWAGEN PASSAT 2.0LT(DIESEL)

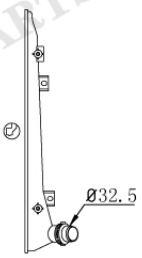

VW-0128

Tank size :(R6.5×5.2×5.5×50×457)
OEM :
DPI :
NISSENS :
APPLICATION :
05- VOLKSWAGEN EOS
05- VOLKSWAGEN PASSAT
05- VOLKSWAGEN JETTA

VW-0129

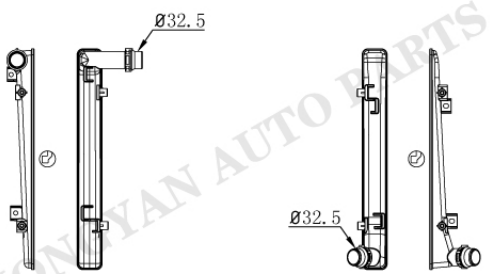

VW-0130

Tank size :(R11×4×5×47×415)
OEM :
DPI :
NISSENS :
APPLICATION :
AUDI A3

HONGYAN AUTO PARTS

VOLKSWAGEN

VW-0131

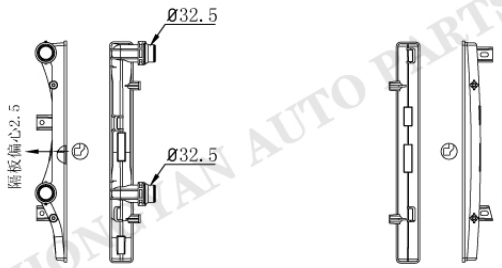

VW-0132

Tank size :(R8×4×5×44×415)
OEM :
DPI :
NISSENS :
APPLICATION :

VW-0133

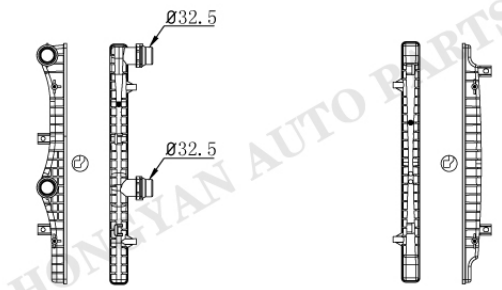

VW-0134

Tank size :(R8×3×5.5×34.2×452)
OEM :
DPI :
NISSENS :
APPLICATION :

VW-0135

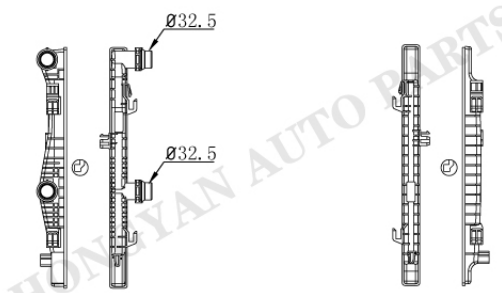

VW-0136

Tank size :(R4.5×2.6×5.5×33×452)
OEM :5Q0121251EQ
DPI :
NISSENS :
APPLICATION :
15- VOLKSWAGEN GOLF 7

VW-0137

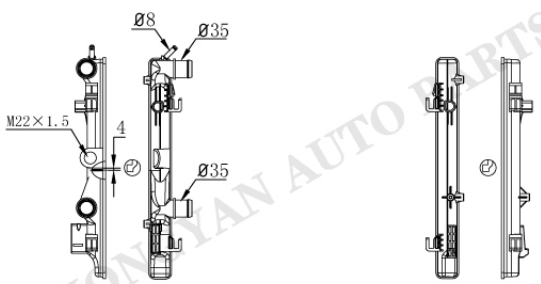

VW-0138

Tank size :(R11×4×5×43×415)
OEM :
DPI :
NISSENS :65293
APPLICATION :

HONGYAN AUTO PARTS

VW-21

VOLKSWAGEN

VW-0139

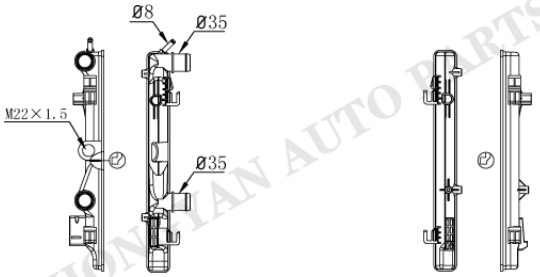

VW-0138

Tank size :(R11×4×5×43×415)
OEM :6R0121253H/R
DPI :
NISSENS :65293
APPLICATION :
08-15 SEAT IBIZA 1.4L
10-14 AUDI A1/S1 1.4/1.8/2.0L

VW-0072

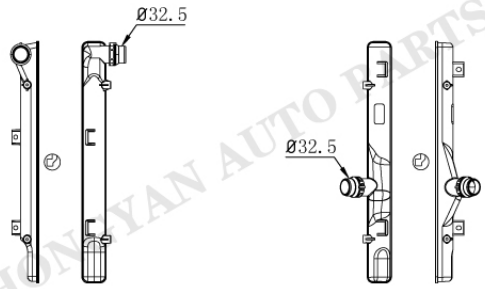

VW-0140

Tank size :(R11.5×4×5×47×454)
OEM :5N0121253L
DPI :13272
NISSENS :65015
APPLICATION :
09-15 VOLKSWAGEN TIGUAN 1.4/2.0L
09-15 VOLKSWAGEN SHATAN 1.4/2.0L

VW-0141

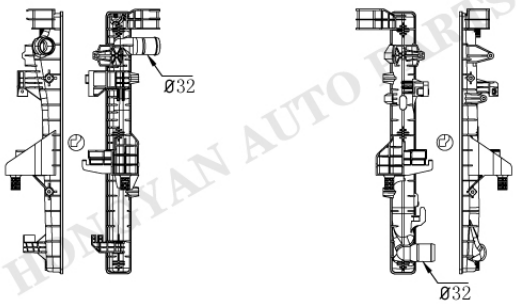

VW-0142

Tank size :(R8×4×5.2×49×492.5)
OEM :7E0121253A
DPI :
NISSENS :
APPLICATION :
VOLKSWAGEN

VW-0143



VW-0144

Tank size :(R5.5×5×4.5×48×378.5)
OEM :
DPI :2094
NISSENS :
APPLICATION :
94-98 VOLKSWAGEN JETTA 2.8L
95-97 VOLKSWAGEN GOLF 2.8L

HONGYAN AUTO PARTS

VOLKSWAGEN

	Tank size : OEM : DPI : NISSENS : APPLICATION :
	Tank size : OEM : DPI : NISSENS : APPLICATION :
	Tank size : OEM : DPI : NISSENS : APPLICATION :
	Tank size : OEM : DPI : NISSENS : APPLICATION :

HONGYAN AUTO PARTS

VO-0001AT/MT

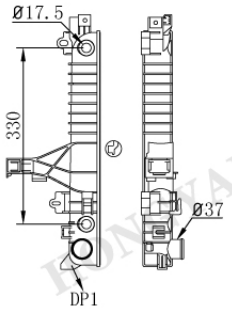

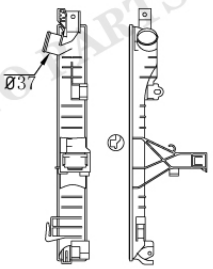

VO-0002

Tank size :(R4×4×6×55.5×443)
OEM : 360024079 86025657 86027539
DPI :2804 2805
NISSENS :65553A 65557A
APPLICATION :
01-09 VOLVO S60 2.0/2.4/2.5L
99-06 VOLVO S80 2.8/2.9L
04-07 VOLVO V70 2.4L

VO-0003AT/MT

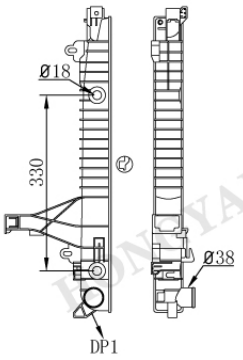

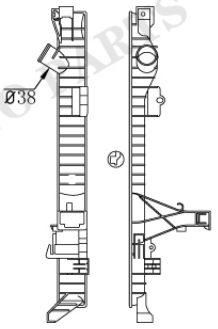

VO-0004

Tank size :(R4×4×6×55.5×555)
OEM :312935505
DPI :2878
NISSENS :65613A
APPLICATION :
07-14 VOLVO XC90 2.5/3.2/4.4L

VO-0005AT/MT

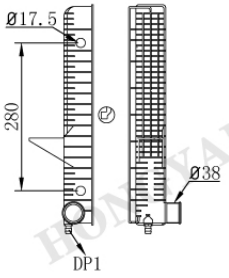

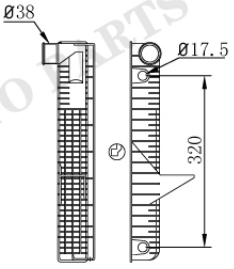

VO-0006AT/MT

Tank size :(R6×4×5×56×413.5)
OEM :86037676/78/94 86013539
86037710/44 86038221/39
DPI :1851 2099 2100
NISSENS :65535A 65536A
APPLICATION :
93-97 VOLVO 850 2.4L
98-00 VOLVO S70 2.4L
98-00 VOLVO V70 2.4L

VO-0005-1AT

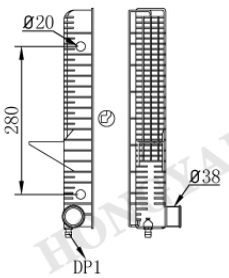

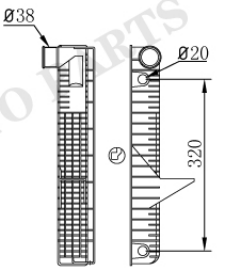

VO-0006-1AT

Tank size :(R6×4×5×56×413.5)
OEM :
DPI :
NISSENS :
APPLICATION :

RONGYAN AUTO PARTS

VOLVO

VO-0007AT/MT

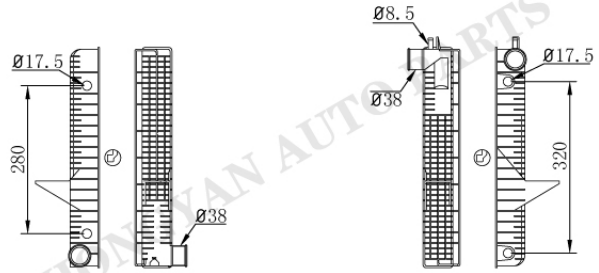

Tank size :(R6×4×5×56×413.5)
OEM : 313190563 86025384/392/590
86032943 86036068 86037678
DPI :2424
NISSENS :65548A
APPLICATION :
99-05 VOLVO C70 2.3/2.4L
99-00 VOLVO S70 2.3L
99-04 VOLVO V70 2.3/2.4L

VO-0008AT/MT

VO-0009AT/MT

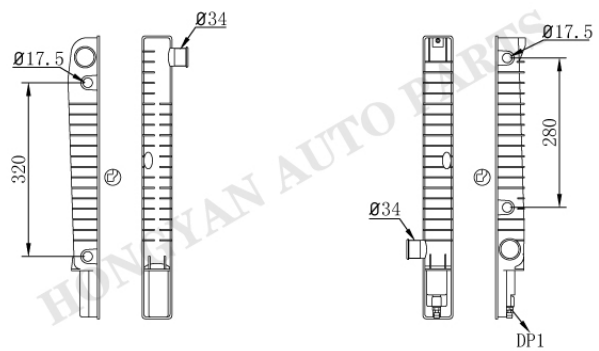

Tank size :(R6×4.5×4×55.6×530.5)
OEM :1397561 5003739 8601017
DPI :
NISSENS :65530A 65550A
APPLICATION :
92-97 VOLVO 960 2.5/2.9L
97-98 VOLVO S90 2.5/2.9L
97-98 VOLVO V90 2.5/2.9L

VO-0010AT/MT

VO-0009AT/MT

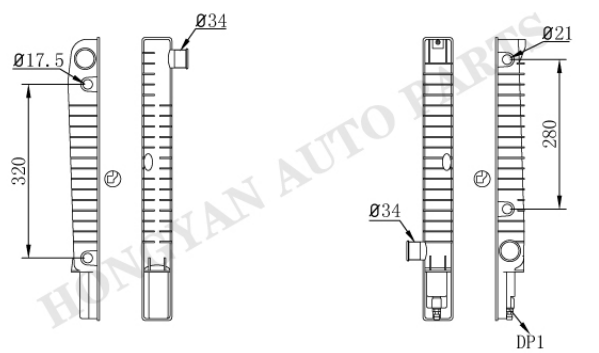

Tank size :(R6×4.5×4×55.6×530.5)
OEM :
DPI :
NISSENS :
APPLICATION :
92-97 VOLVO 960 2.5/2.9L
97-98 VOLVO S90 2.5/2.9L
97-98 VOLVO V90 2.5/2.9L

VO-0010-1AT

VO-0009AT/MT

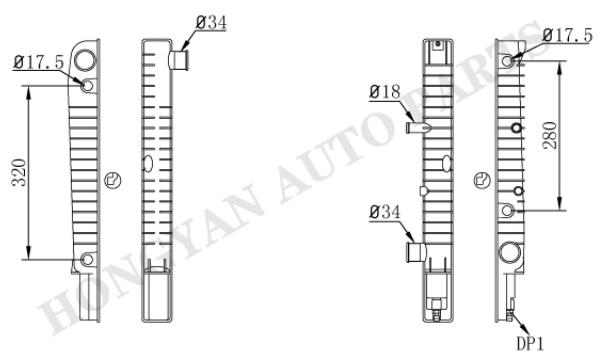

Tank size :(R6×4.5×4×55.6×530.5)
OEM :360039070 86025657 8603739
86037397 8603907 86039070
DPI :1738 1739
NISSENS :
APPLICATION :
92-97 VOLVO 960 2.9L
97-98 VOLVO S90 2.9L
97-98 VOLVO V90 2.9L

VO-0011AT/MT

HONGYAN AUTO PARTS

VO-0009AT/MT

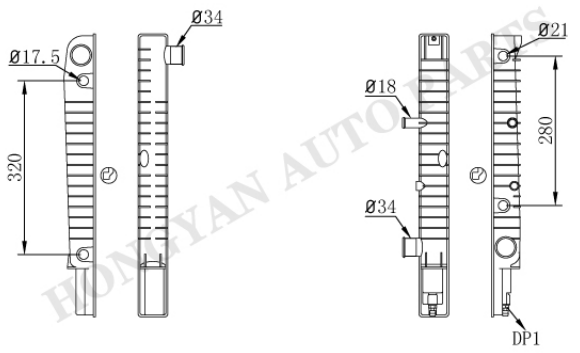

VO-0011-1AT

Tank size : (R6×4.5×4×55.6×530.5)
OEM :
DPI :
NISSENS :
APPLICATION :

VO-0012AT/MT

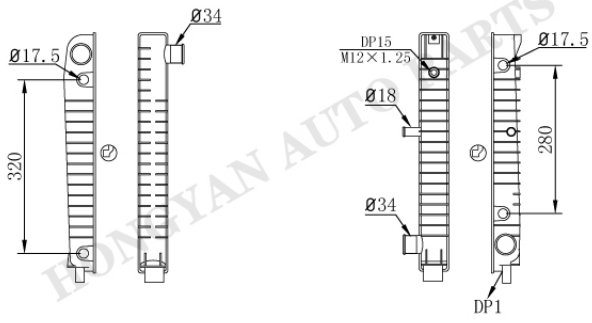

VO-0013AT/MT

Tank size :(R6×4.5×4×55.6×450.5)
OEM :3547155 86039054 91703152
DPI :1577 1578
NISSENS :65537A
APPLICATION :
87-92 VOLVO 740 2.3L
93-95 VOLVO 940 2.3L

VO-0012AT/MT

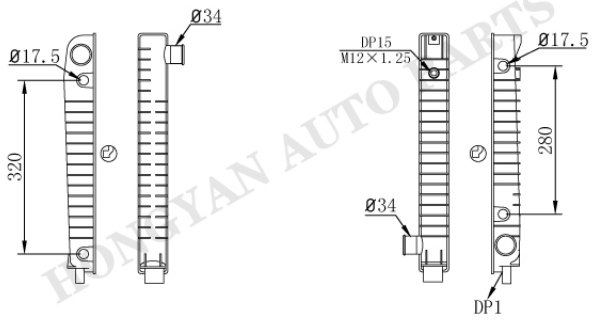

VO-0014AT/MT

Tank size :(R6×4.5×4×55.6×450.5)
OEM :
DPI :
NISSENS :
APPLICATION :
87-92 VOLVO 740 2.3L
93-95 VOLVO 940 2.3L

VO-0015



VO-0016

Tank size :(R8×5×6×46.5×355.5)
OEM :86020650 86021177 86032448
DPI :2400
NISSENS :
APPLICATION :
00-03 VOLVO S40 1.9L
00-04 VOLVO V40 1.9L

HONGYAN AUTO PARTS

VOLVO

VO-0015

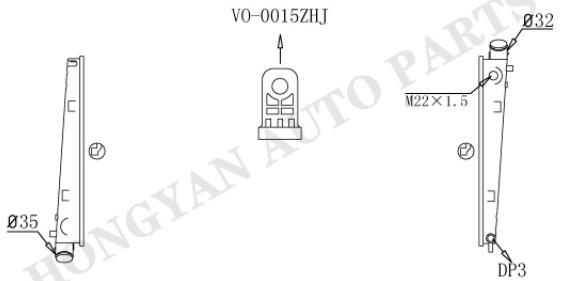

Tank size :(R8×5×6×46.5×355.5)
OEM :8602116 8602117
DPI :
NISSENS :65551A
APPLICATION :
00-03 VOLVO S40 1.9L
00-04 VOLVO V40 1.9L

VO-0017

VO-0018



Tank size :(R16×5,.5×7×68.5×450)
OEM :
DPI :83 184 1431
NISSENS :65480 65481
APPLICATION :
90-93 VOLVO 240
76-81 VOLVO 242
79-89 VOLVO 244

VO-0019AT/MT

VO-0020AT/MT

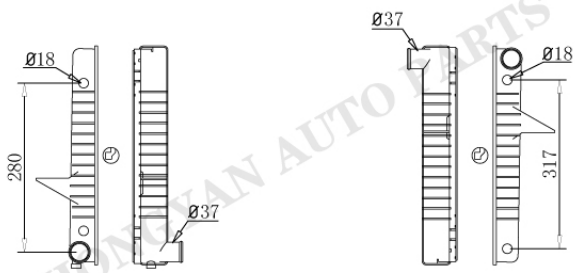

Tank size :(R6×5×5×55.5×411)
OEM :
DPI :
NISSENS :
APPLICATION :

VO-0021AT/MT

Tank size :
OEM :
DPI :
NISSENS :
APPLICATION :

HONGYAN AUTO PARTS

GCH-0001

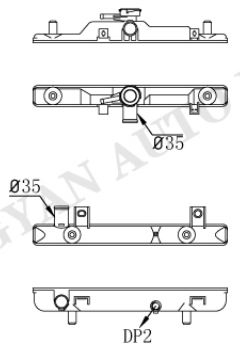

GCH-0002

Tank size :(R9×4.5×5×39.5×365)
OEM :
DPI :
NISSENS :
APPLICATION :
长安之星

GCH-0003

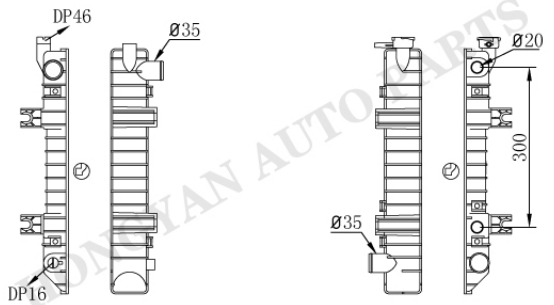

GCH-0004AT/MT

Tank size :(R8.5×5×5×70×460)
OEM :
DPI :
NISSENS :
APPLICATION :

GCH-0005AT/MT

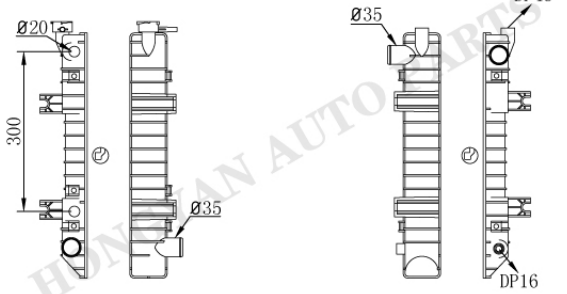

GCH-0006

Tank size :(R8.5×5×5×70×460)
OEM :
DPI :
NISSENS :
APPLICATION :

GCH-0005AT/MT

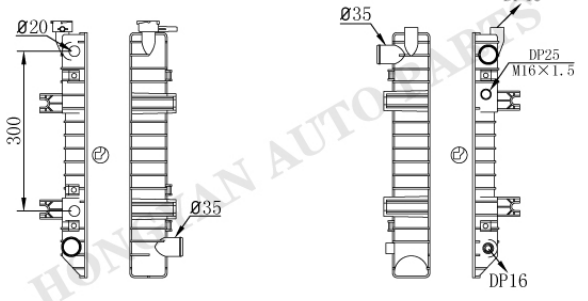

GCH-0007

Tank size :(R8.5×5×5×70×460)
OEM :
DPI :
NISSENS :
APPLICATION :

CHINSES CAR

GCH-0008

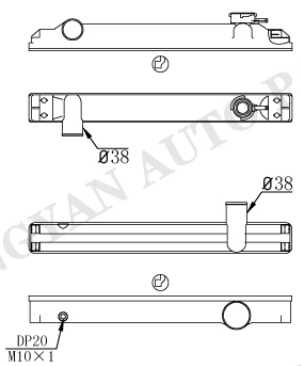

GCH-0009

Tank size :(R9.5×4.5×5×54×494)
OEM :
DPI :
NISSENS :
APPLICATION :

GCH-0010

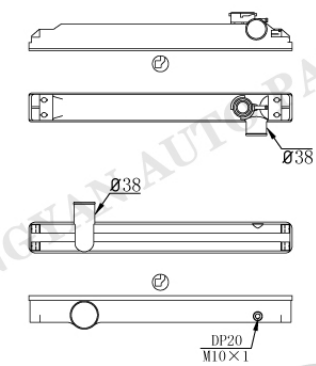

GCH-0011

Tank size :(R9.5×4.5×5×54×494)
OEM :
DPI :
NISSENS :
APPLICATION :

GCH-0012

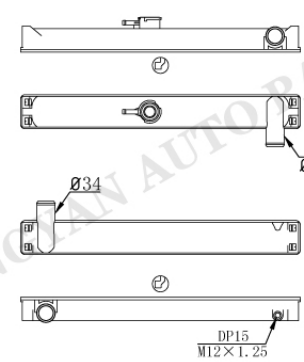

GCH-0013

Tank size :(R9.5×5×5×64×525)
OEM :
DPI :
NISSENS :
APPLICATION :

GCH-0014

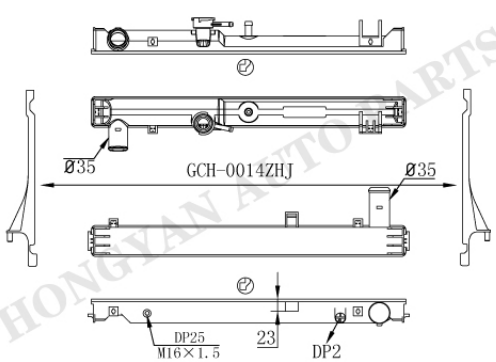

GCH-0015

Tank size :(R8×4.8×5×58×590)
OEM :
DPI :
NISSENS :
APPLICATION :

HONGYAN AUTO PARTS

GCH-0014

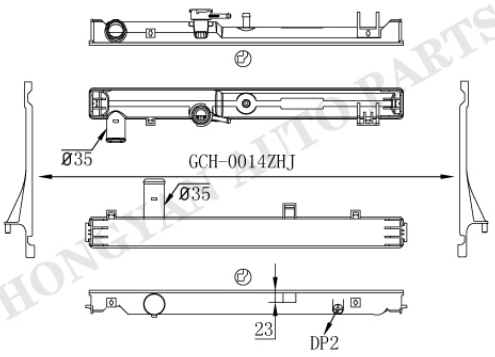

GCH-0016

Tank size :(R8×4.8×5×58×590)
OEM :
DPI :
NISSENS :
APPLICATION :

GCH-0014

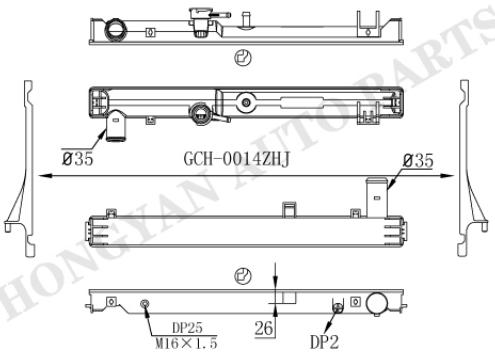

GCH-0017

Tank size :(R8×4.8×5×58×590)
OEM :
DPI :
NISSENS :
APPLICATION :

GCH-0014

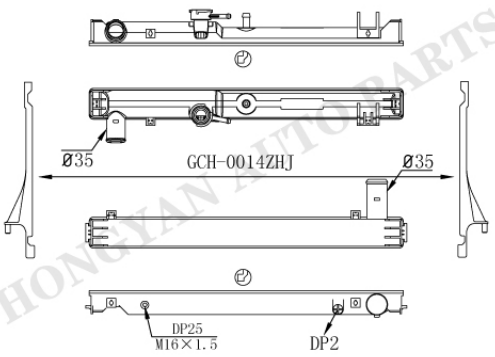

GCH-0018

Tank size :(R8×4.8×5×58×590)
OEM :
DPI :
NISSENS :
APPLICATION :

GCH-0019

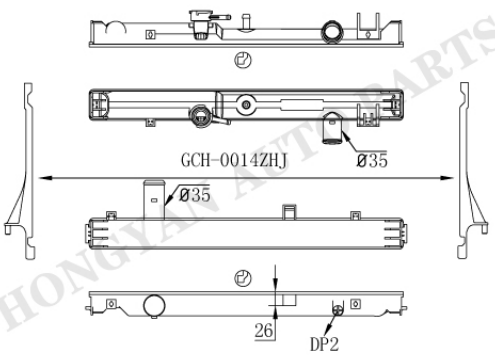

GCH-0020

Tank size :(R8×4.8×5×58×590)
OEM :
DPI :
NISSENS :
APPLICATION :

CHINSES CAR

GCH-0021

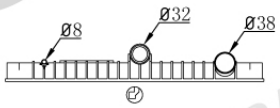

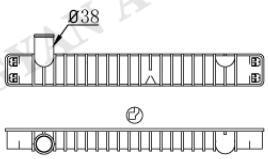

GCH-0022

Tank size :(R9×4.6×5×60×485)
OEM :
DPI :
NISSENS :
APPLICATION :

GCH-0023

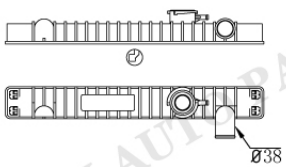

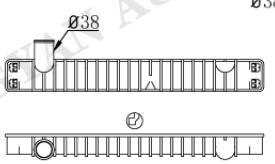

GCH-0022

Tank size :(R9×4.6×5×60×485)
OEM :
DPI :
NISSENS :
APPLICATION :

GCH-0024

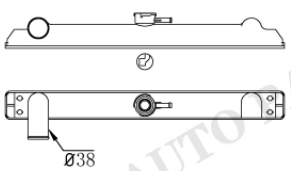

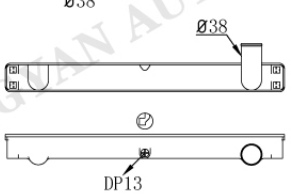

GCH-0025

Tank size :(R9.6×4.5×4.5×53.6×524)
OEM :
DPI :
NISSENS :
APPLICATION :

GCH-0026

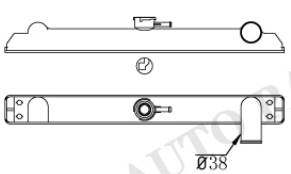

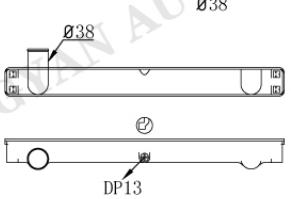

GCH-0027

Tank size :(R9.6×4.5×4.5×53.6×524)
OEM :
DPI :
NISSENS :
APPLICATION :

HONGYAN AUTO PARTS

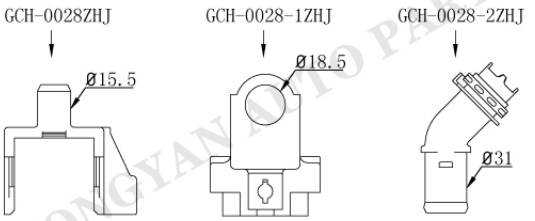

Tank size :
OEM :
DPI :
NISSENS :
APPLICATION :

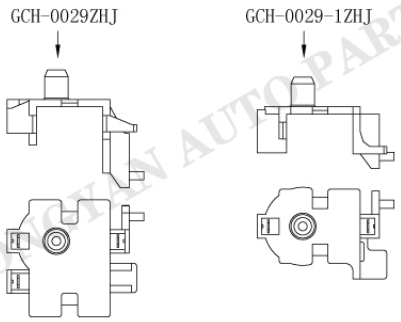

Tank size :
OEM :
DPI :
NISSENS :
APPLICATION :

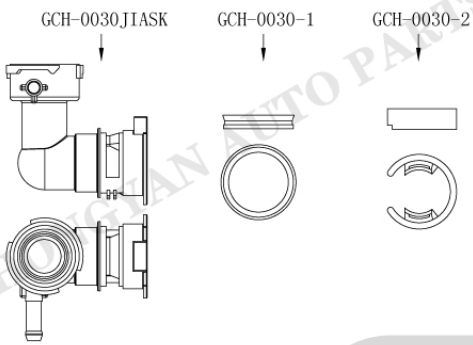

Tank size :
OEM :
DPI :
NISSENS :
APPLICATION :

GCH-0031

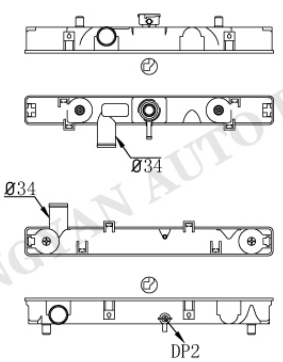

GCH-0032

Tank size :(R9×4×5×54×467)
OEM :
DPI :
NISSENS :
APPLICATION :
KUBOTA 45马力/35马力

HONGYAN AUTO PARTS

GCH-5

CHINSES CAR

GCH-0031

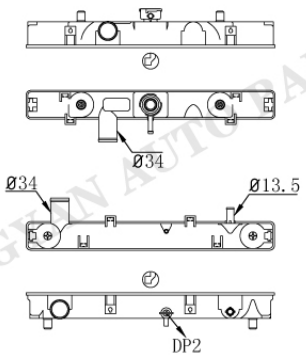

GCH-0033

Tank size :(R9×4×5×54×467)
OEM :
DPI :
NISSENS :
APPLICATION :
KUBOTA 45马力/35马力

GCH-0031

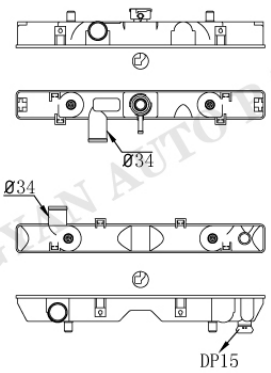

GCH-0034

Tank size :(R9×4×5×54×467)
OEM :
DPI :
NISSENS :
APPLICATION :

GCH-0035

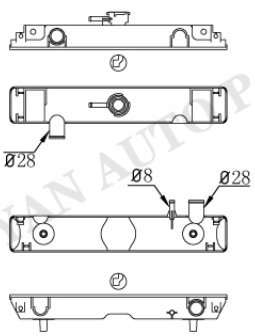

GCH-0036

Tank size :(R9×4.5×4.5×68.5×407)
OEM :
DPI :
NISSENS :
APPLICATION :
犁田

GCH-0037

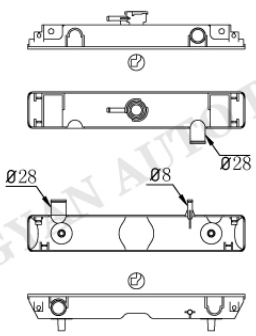

GCH-0038

Tank size :(R9×4.5×4.5×68.5×407)
OEM :
DPI :
NISSENS :
APPLICATION :
犁田

GCH-6

HONGYAN AUTOPARTS

GCH-0039

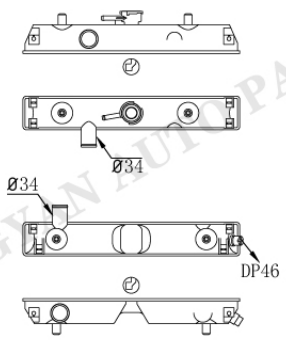

GCH-0040

Tank size : (R9×4.5×4.5×68.5×407)
OEM :
DPI :
NISSENS :
APPLICATION :
犁田

GCH-0041

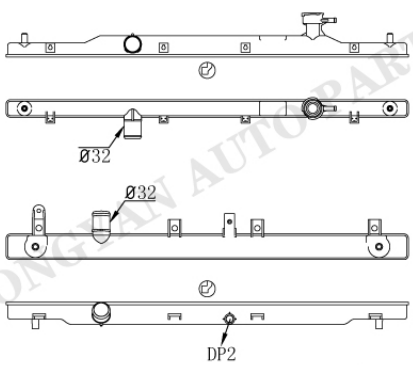

GCH-0042

Tank size :(R8×4.3×5×33/48×755)
OEM :
DPI :
NISSENS :
APPLICATION :
长城 H6(GAS)

GCH-0041

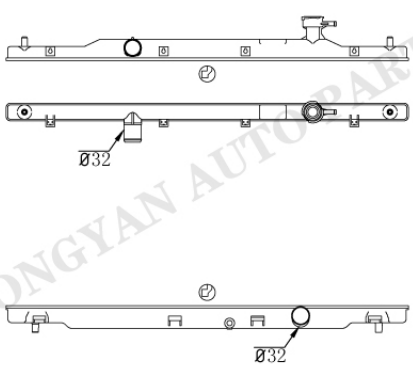

GCH-0043

Tank size :(R8×4.3×5×33/48×755)
OEM :
DPI :
NISSENS :
APPLICATION :
长城 H6(DIESEL)

Tank size :
OEM :
DPI :
NISSENS :
APPLICATION :

HONGYAN AUTO PARTS

CHINSES CAR

GCH-0046

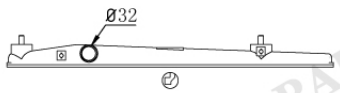

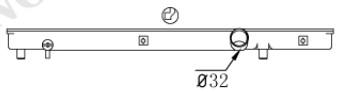

GCH-0047

Tank size :(R9.5×4.5×4.5×40×613.5)
OEM :
DPI :
NISSENS :
APPLICATION :
09- 长城炫丽 1.5L

GCH-0048

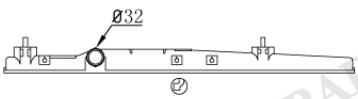

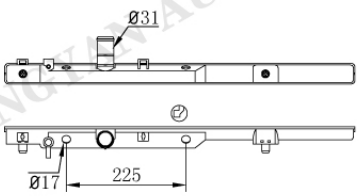

GCH-0049AT/MT

Tank size :(R9×4×5×32.5/39×659)
OEM :
DPI :
NISSENS :
APPLICATION :
09- 长城炫丽 1.3L

GCH-0050

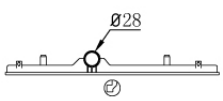

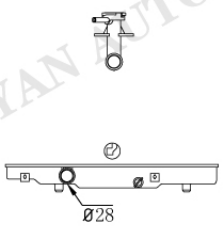

GCH-0051

Tank size :(R5×5×5×42×402)
OEM :
DPI :
NISSENS :
APPLICATION :
长安奔奔

GCH-0050

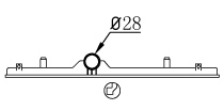

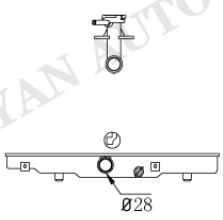

GCH-0052

Tank size :(R5×5×5×42×402)
OEM :
DPI :
NISSENS :
APPLICATION :
长安奔奔

HONGYAN AUTO PARTS

GCH-0053



GCH-0054

Tank size : (R9.5×4.5×4.5×32×388)
OEM :
DPI :
NISSENS :
APPLICATION :
哈飞路宝7110

GCH-0055

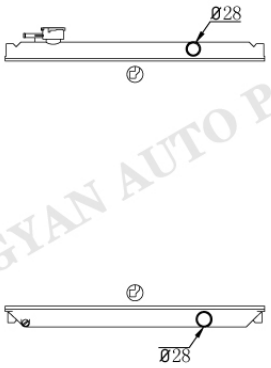

GCH-0056

Tank size :(R9×4.5×5×44.5×487)
OEM :
DPI :
NISSENS :
APPLICATION :
哈飞中意

GCH-0057



GCH-0058

Tank size :(R8×4.5×4.5×48×411)
OEM :
DPI :
NISSENS :
APPLICATION :
哈飞民意

GCH-0059

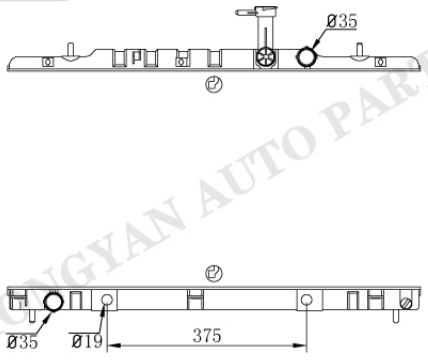

GCH-0060AT/MT

Tank size : (R8.5×5×4×46.5/52×775)
OEM : U0604010200
DPI :
NISSENS :
APPLICATION :
13- 纳智捷 G5

GCH-9

CHINSES CAR

GCH-0061



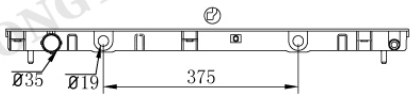

GCH-0062AT/MT

Tank size : (R8.5×5×4×46.5/52×775)
OEM :U0368110200
DPI :
NISSENS :
APPLICATION :
12- 纳智捷 大7 MPV

GCH-0063

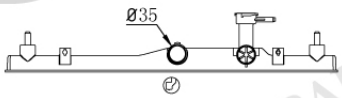

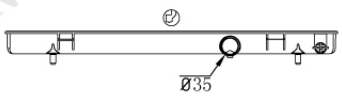

GCH-0064

Tank size :(R8.5×5×4.3×36×624)
OEM :U0685010200 U0685010300
DPI :
NISSENS :
APPLICATION :
14- 纳智捷 LC

GCH-0065

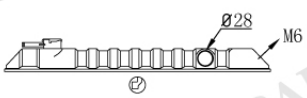

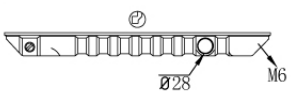

GCH-0066

Tank size :(R8.5×4×4.5×52×499)
OEM :
DPI :
NISSENS :
APPLICATION :
台湾福特 小帮手

GCH-0067

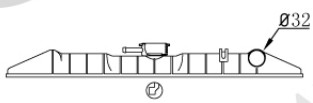

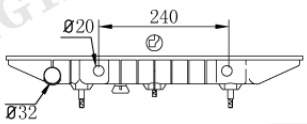

GCH-0068AT/MT

Tank size : (R6.5×4.8×6.6×67×557)
OEM :
DPI :
NISSENS :
APPLICATION :
LONDON TAXI

HONGYAN AUTO PARTS

GCH-0067

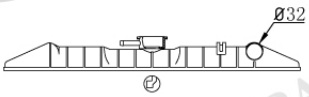

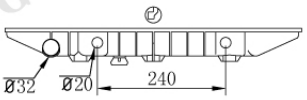

GCH-0069AT/MT

Tank size : (R6.5×4.8×6.6×67×557)
OEM :
DPI :
NISSENS :
APPLICATION :
LONDON TAXI

GCH-0070

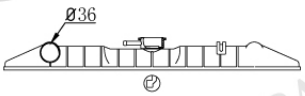

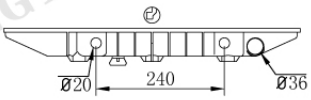

GCH-0071AT/MT

Tank size : (R6.5×4.8×6.6×67×557)
OEM :
DPI :
NISSENS :
APPLICATION :
LONDON TAXI

GCH-0072AT/MT

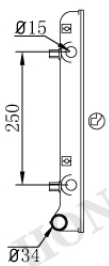

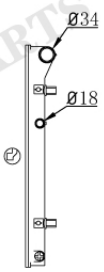

GCH-0073

Tank size :(R9×5×5.5×48×417)
OEM :3481867/6
DPI :
NISSENS :
APPLICATION :
10- 中华骏捷 FRV

GCH-0074

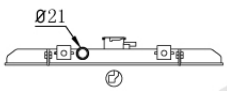

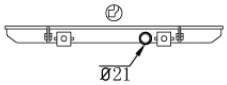

GCH-0075

Tank size :(R5×5×4.5×68×409)
OEM :
DPI :
NISSENS :
APPLICATION :

HONGYAN AUTO PARTS

CHINSES CAR

GCH-0074

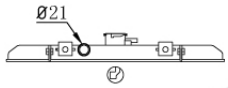

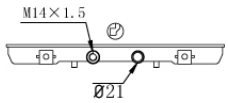

GCH-0076

Tank size :(R5×5×4.5×68×409)
OEM :
DPI :
NISSENS :
APPLICATION :

GCH-0077

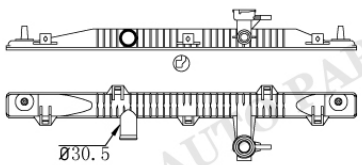

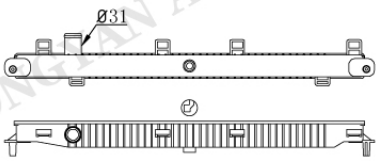

GCH-0078

Tank size : (R8×4.2×4.7×48×658.5)
OEM :
DPI :
NISSENS :
APPLICATION :
长安悦翔

GCH-0079

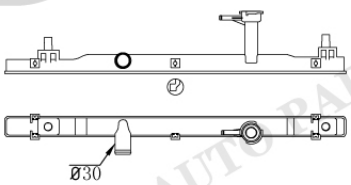

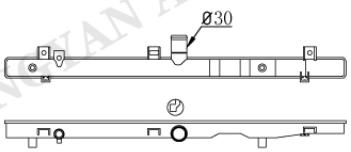

GCH-0080

Tank size :(R8×5×5×39×641)
OEM :
DPI :
NISSENS :
APPLICATION :
09- HAIMA FUSHIDA

GCH-0081

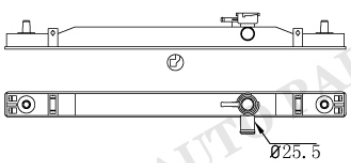

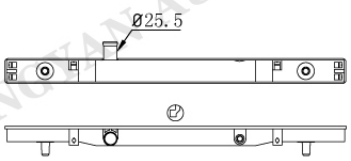

GCH-0082

Tank size :(R7.5×5×5×47.5×640)
OEM :
DPI :
NISSENS :
APPLICATION :
09- 东风小康

HONGYAN AUTO PARTS

GCH-0083

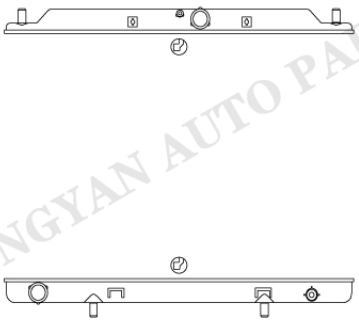

GCH-0084

Tank size : (R9.5×4.8×5.5×42.8×656)
OEM :
DPI :
NISSENS :
APPLICATION :
五菱宏光

GCH-0083

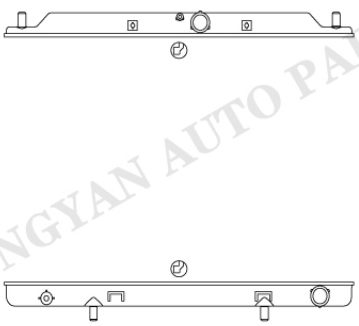

GCH-0085

Tank size : (R9.5×4.8×5.5×42.8×656)
OEM :
DPI :
NISSENS :
APPLICATION :
五菱宏光

GCH-0086

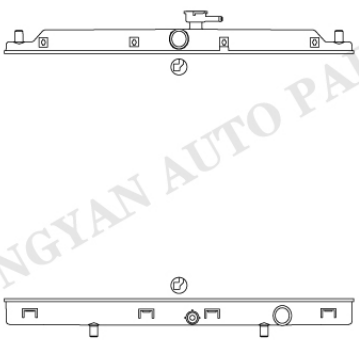

GCH-0087

Tank size : (R9.5×4.8×5.5×42.8×656)
OEM :
DPI :
NISSENS :
APPLICATION :
五菱荣光

GCH-0088

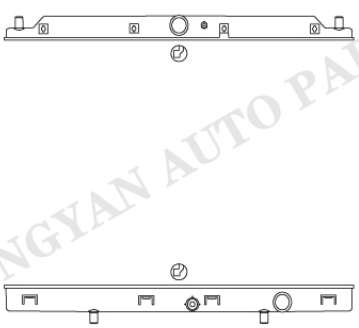

GCH-0087

Tank size : (R9.5×4.8×5.5×42.8×656)
OEM :
DPI :
NISSENS :
APPLICATION :
五菱荣光

HONGYAN AUTO PARTS

CHINSES CAR

GCH-0089

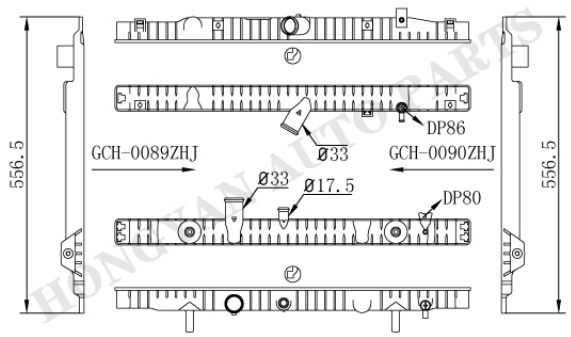

GCH-0090

Tank size :(R8.5×5×5×49×667)
OEM :
DPI :
NISSENS :
APPLICATION :
菱悦

GCH-0091

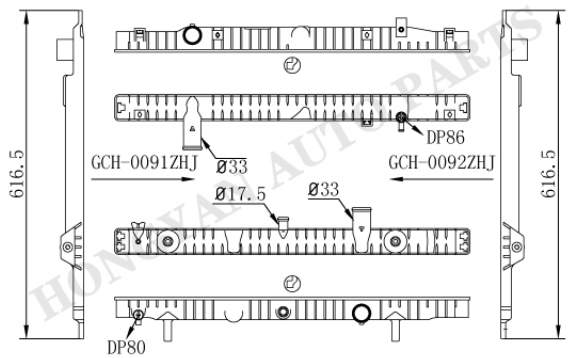

GCH-0092

Tank size :(R8.5×5×5×49×667)
OEM :
DPI :
NISSENS :
APPLICATION :
菱悦

GCH-0093

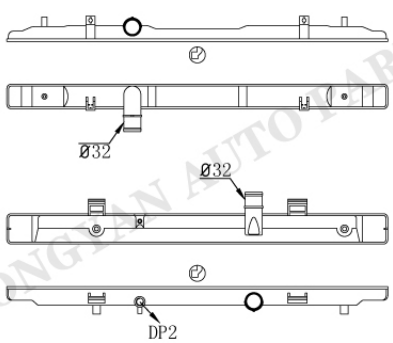

GCH-0094

Tank size :(R8×4.5×5×46/56.5×715)
OEM :
DPI :
NISSENS :
APPLICATION :
HAFU M2/M4

GCH-0095

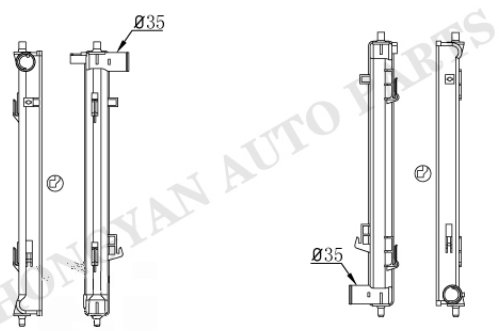

GCH-0096

Tank size :(R9×4.5×4.5×46.5×496.5)
OEM :
DPI :
NISSENS :
APPLICATION :
江淮S5

GCH-14

GCH-0097

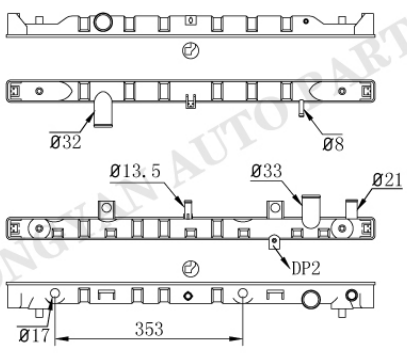

GCH-0098AT/MT

Tank size :(R8.5×4.5×5×42×693)
OEM :
DPI :
NISSENS :
APPLICATION :
T600 1.5T/2.0T

GCH-0099

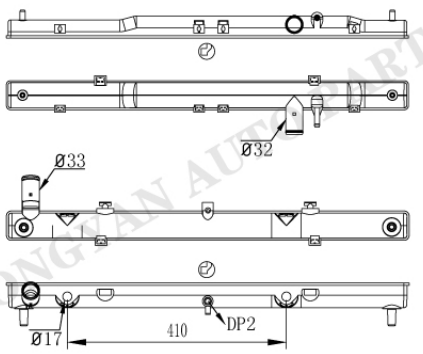

GCH-0100AT/MT

Tank size :(R8.5×5×4.5×55×753)
OEM :
DPI :
NISSENS :
APPLICATION :
宝利格

GCH-0101

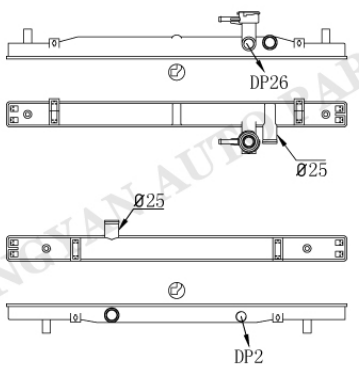

GCH-0102

Tank size :(R7.5×4.5×5×47.5×640)
OEM :
DPI :
NISSENS :
APPLICATION :
CHANG AN

GCH-0103

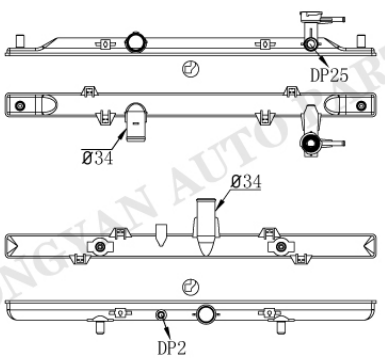

GCH-0104

Tank size :(R8×5×5×45×697)
OEM :
DPI :
NISSENS :
APPLICATION :
宝骏730 1.8L

HONGYAN AUTO PARTS

CHINSES CAR

GCH-0105

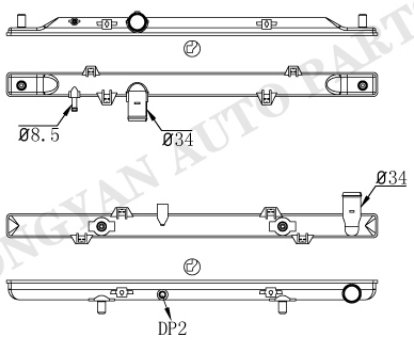

GCH-0106

Tank size :(R8×5×5×45×697)
OEM :
DPI :
NISSENS :
APPLICATION :
宝骏730 1.5L

GCH-0107

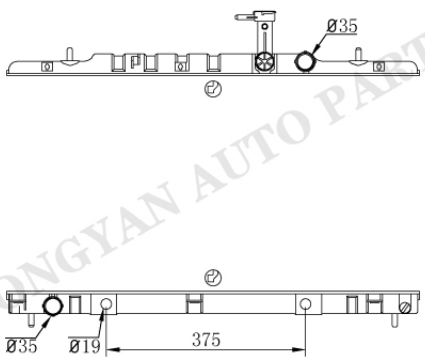

GCH-0060AT/MT

Tank size :(R8.5×5×4×46.5/52×775)
OEM :U0717010200
DPI :
NISSENS :
APPLICATION :
14- LUXGEN U6

GCH-0108

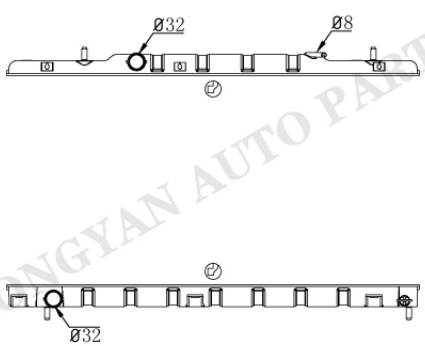

GCH-0109

Tank size :(R8.5×5×4×46.6×775)
OEM :U0800010200/310
DPI :
NISSENS :
APPLICATION :

GCH-0110

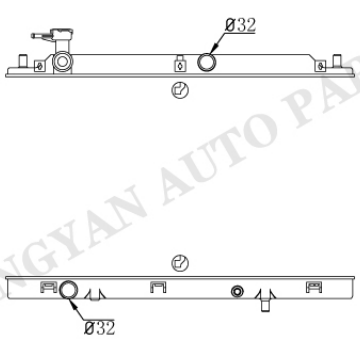

GCH-0111

Tank size :(R9×5×5×42.8×654.8)
OEM :
DPI :
NISSENS :
APPLICATION :
力帆CA09

HONGYAN AUTO PARTS

GCH-16

GCH-0112



GCH-0113

Tank size :(R8.5×5×5×42.8×412.8)
OEM :
DPI :
NISSENS :
APPLICATION :
力帆CA10

GCH-0114

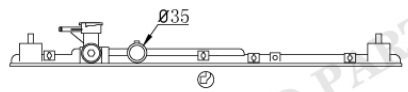



GCH-0115

Tank size :(R9×4×5×48×736)
OEM :
DPI :
NISSENS :
APPLICATION :

GCH-0116

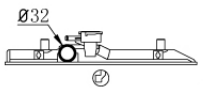

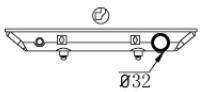

GCH-0117

Tank size :(R5×4.5×5×49.6×360)
OEM :
DPI :
NISSENS :
APPLICATION :

GCH-0118

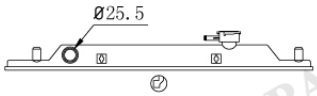

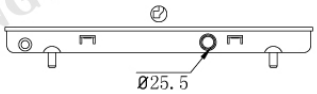

GCH-0119

Tank size :(R9×5×5×40×578)
OEM :
DPI :
NISSENS :
APPLICATION :

HONGYAN AUTO PARTS

CHINSES CAR

GCH-0120

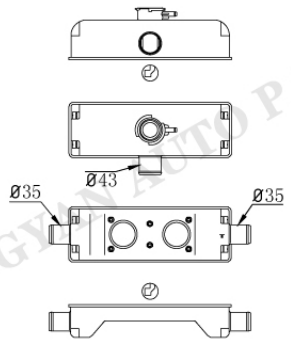

GCH-0121

Tank size :(R9×5×5×104×306)
OEM :
DPI :
NISSENS :
APPLICATION :
SHUNCHAI 190

GCH-0122

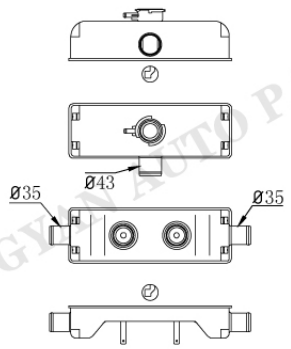

GCH-0123

Tank size :(R9×5×5×104×306)
OEM :
DPI :
NISSENS :
APPLICATION :
SHUNCHAI 195

GCH-0124

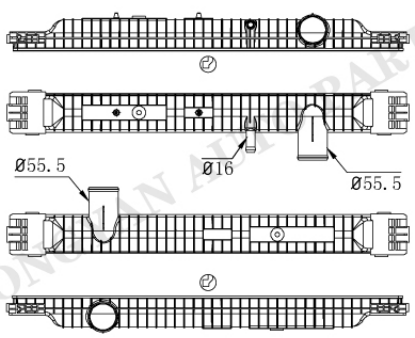

GCH-0125

Tank size :(R8×5.5×5×71.5×732.5)
OEM :
DPI :
NISSENS :
APPLICATION :
JUNMA

GCH-0126

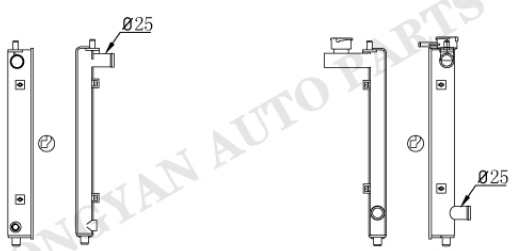

GCH-0127

Tank size :(R9×4.5×4.5×32.5×358)
OEM :
DPI :
NISSENS :
APPLICATION :
AN CHI

HONGYAN AUTO PARTS

GCH-18

GCH-0128

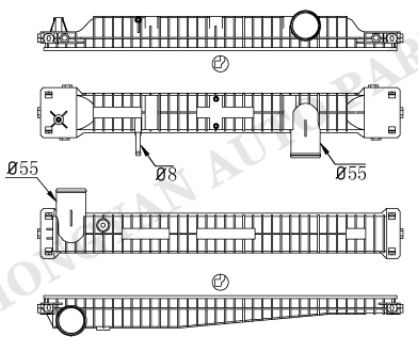

GCH-0129

Tank size :(R8×5.2×5.5×72×662.5)
OEM :
DPI :
NISSENS :
APPLICATION :

GCH-0130

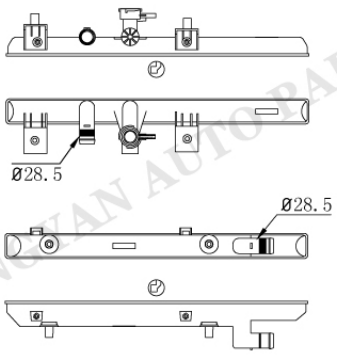

GCH-0131

Tank size :(R6.5×5×4.5×47.5×568)
OEM :
DPI :
NISSENS :
APPLICATION :

GCH-0132

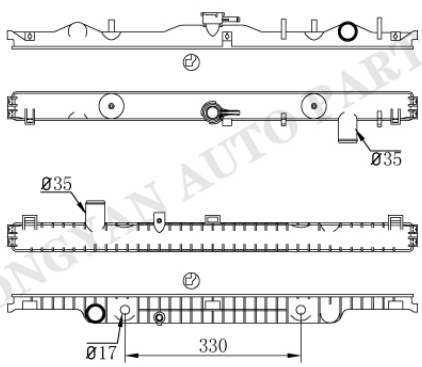

GCH-0133AT/MT

Tank size :(R9×5×4.8×54×752.5)
OEM :
DPI :
NISSENS :
APPLICATION :
ZHONGXING PICK UP

GCH-0134

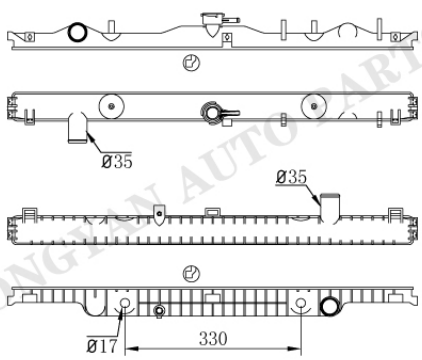

GCH-0135AT/MT

Tank size :(R9×5×4.8×54×752.5)
OEM :
DPI :
NISSENS :
APPLICATION :
ZHONGXING PICK UP

HONGYAN AUTO PARTS

CHINSES CAR

GCH-0136

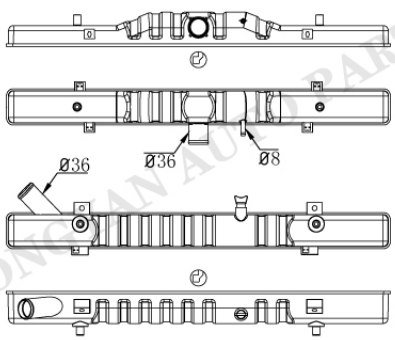

GCH-0137

Tank size :(R12.5×5×4.5×66×722)
OEM :
DPI :
NISSENS :
APPLICATION :

GCH-0138

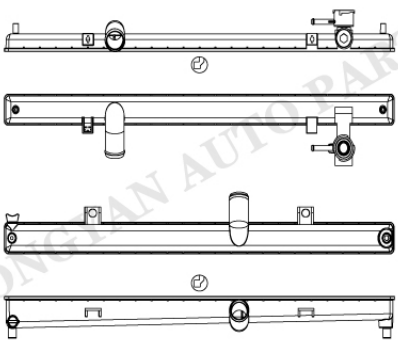

GCH-0139

Tank size :(R8×4×5×48.5×733)
OEM :
DPI :
NISSENS :
APPLICATION :
重庆力帆

GCH-0140

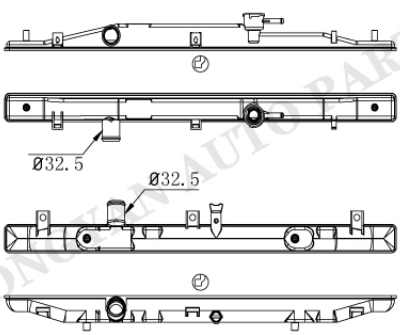

GCH-0141

Tank size :(R9×4.5×5×48×736.5)
OEM :
DPI :
NISSENS :
APPLICATION :
重庆力帆

GCH-0142

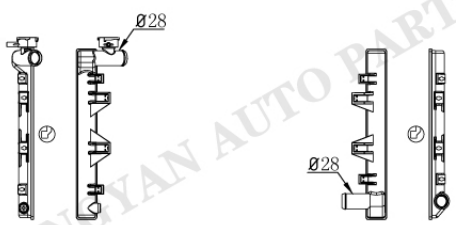

GCH-0143

Tank size :(R6.5×4.5×5×42×321)
OEM :
DPI :
NISSENS :
APPLICATION :
国产公交

HONGYAN AUTO PARTS

GCH-0144

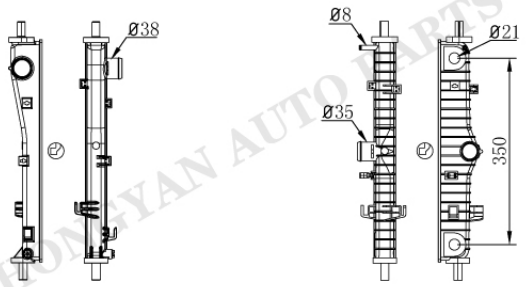

GCH-0145AT/MT

Tank size :(R5×4×5.5×42×418)
OEM :
DPI :
NISSENS :
APPLICATION :
上海大通G10

GCH-0146

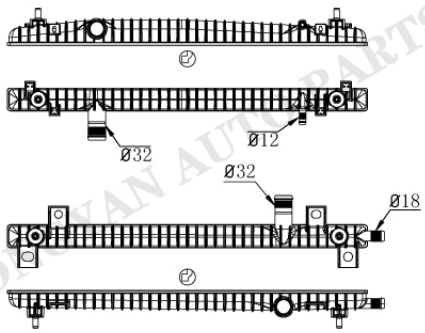

GCH-0147

Tank size :(R5.5×4×5.5×42×676.5)
OEM :
DPI :
NISSENS :
APPLICATION :
风神AX70

GCH-0148

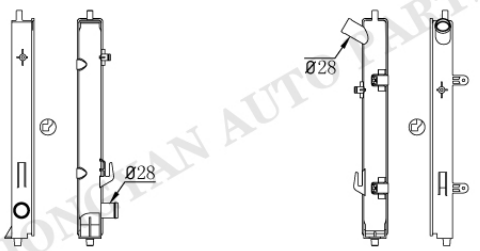

GCH-0149

Tank size :(R6×4.5×4.5×48×408)
OEM :
DPI :
NISSENS :
APPLICATION :

GCH-0150

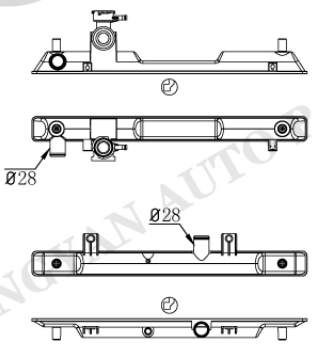

GCH-0151

Tank size :(R9×5×5×47×517)
OEM :
DPI :
NISSENS :
APPLICATION :

HONGYAN AUTO PARTS

CHINSES CAR

GCH-0152

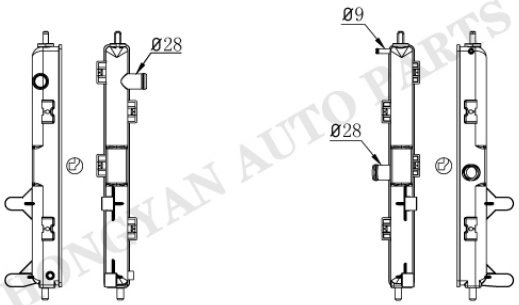

GCH-0153

Tank size :(R8×5×5×48×455)
OEM :
DPI :
NISSENS :
APPLICATION :

GCH-0154

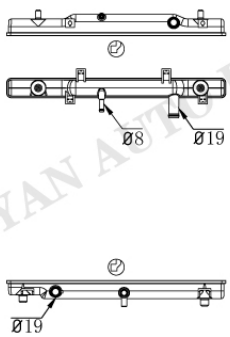

GCH-0155

Tank size :(R9×5×5.5×37×412)
OEM :
DPI :
NISSENS :
APPLICATION :

GCH-0156

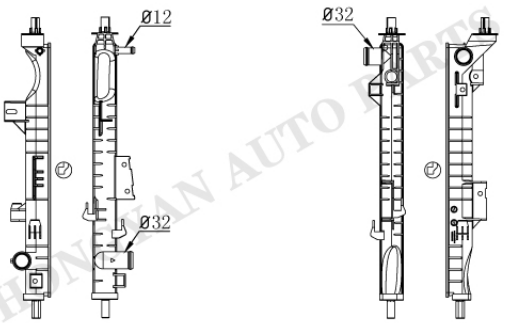

GCH-0157

Tank size :(R9×4.5×4.5×44.5×478)
OEM :
DPI :
NISSENS :
APPLICATION :

GCH-0156

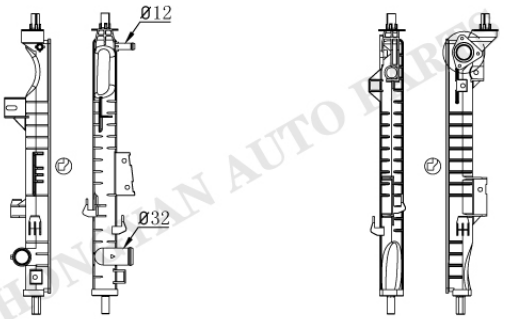

GCH-0158

Tank size :(R9×4.5×4.5×44.5×478)
OEM :
DPI :
NISSENS :
APPLICATION :

HONGYAN AUTO PARTS

GCH-0159

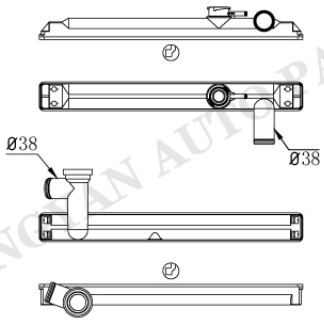

GCH-0160

Tank size :(R9×5×5×54×495)
OEM :
DPI :
NISSENS :
APPLICATION :

GCH-0161

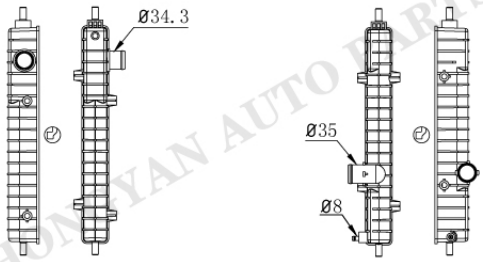

GCH-0162

Tank size :(R9×4.5×4.5×50.5×409)
OEM :
DPI :
NISSENS :
APPLICATION :

GCH-0163

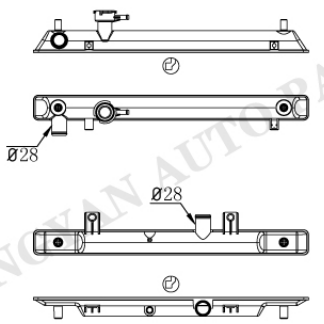

GCH-0164

Tank size :(R9×5×5×47×517)
OEM :
DPI :
NISSENS :
APPLICATION :

GCH-0165

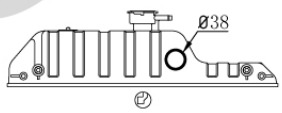

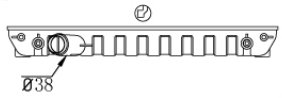

GCH-0166

Tank size :(R9.5×5.5×6×110×510)
OEM :
DPI :
NISSENS :
APPLICATION :

HONGYAN AUTO PARTS

CHINSES CAR

GCH-0167

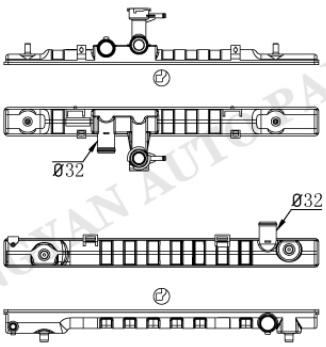

GCH-0168

Tank size :(8×5×4.5×54×591.5)
OEM :
DPI :
NISSENS :
APPLICATION :

GCH-0169

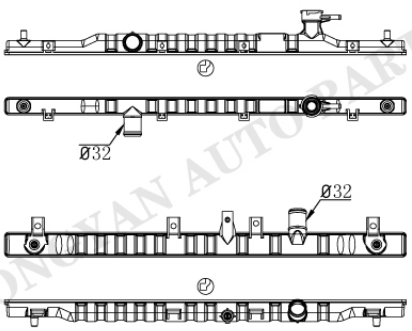

GCH-0170

Tank size :(R9.5×5×4.5×33/47×755)
OEM :
DPI :
NISSENS :
APPLICATION :

GCH-0169

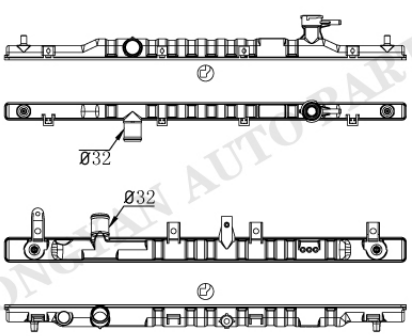

GCH-0171

Tank size :(R9.5×5×4.5×33/47×755)
OEM :
DPI :
NISSENS :
APPLICATION :

GCH-0172

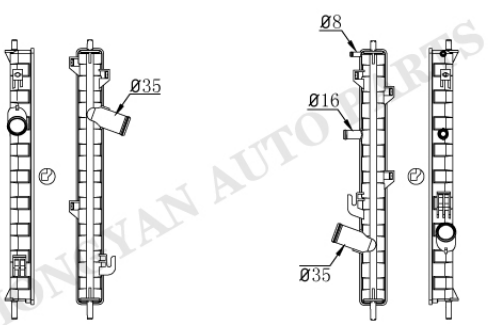

GCH-0173

Tank size :(R9×5×5×51×481)
OEM :
DPI :
NISSENS :
APPLICATION :

GCH-0174

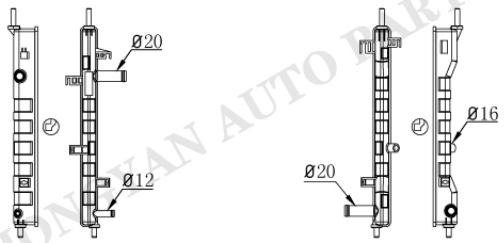

GCH-0175

Tank size :(R9×5×5×33×376)
OEM :
DPI :
NISSENS :
APPLICATION :

GCH-0176

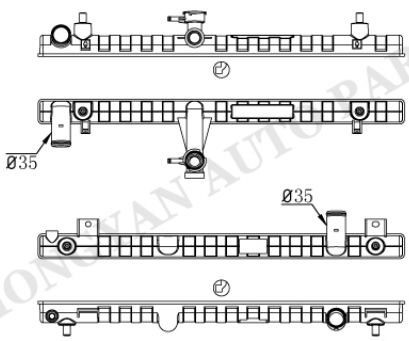

GCH-0177

Tank size :(R9×5×5×47×688.5)
OEM :
DPI :
NISSENS :
APPLICATION :

GCH-0178

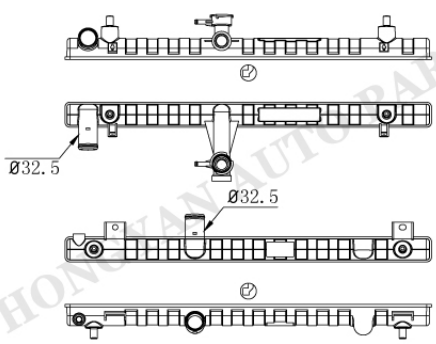

GCH-0179

Tank size :(R9×5×5×47×688.5)
OEM :
DPI :
NISSENS :
APPLICATION :

GCH-0180

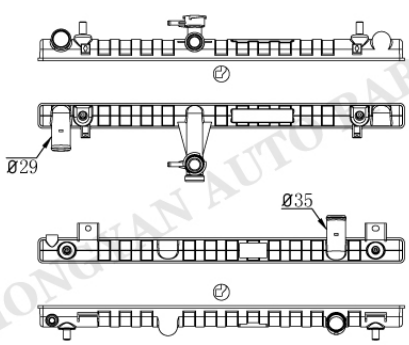

GCH-0177

Tank size :(R9×5×5×47×688.5)
OEM :
DPI :
NISSENS :
APPLICATION :

HONGXIAN AUTO PARTS

CHINSES CAR

GCH-0181

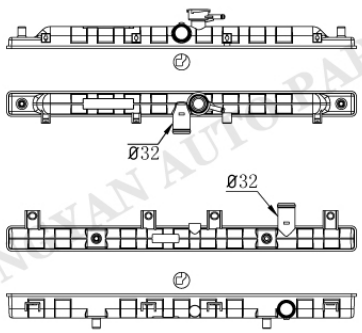

GCH-0182

Tank size :(R9×5.5×5×47×657)
OEM :
DPI :
NISSENS :
APPLICATION :

GCH-0183

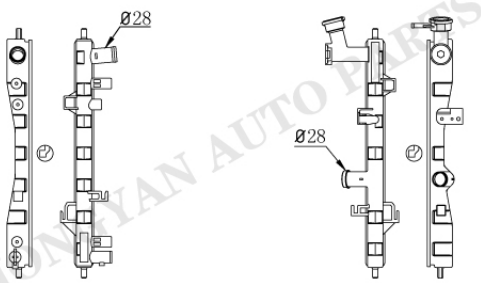

GCH-0184

Tank size :(R8×4.6×5.5×36×426)
OEM :
DPI :
NISSENS :
APPLICATION :

GCH-0183

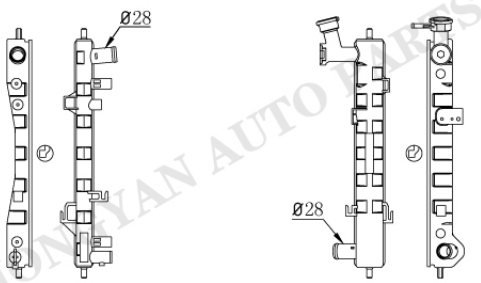

GCH-0185

Tank size :(R8×4.6×5.5×36×426)
OEM :
DPI :
NISSENS :
APPLICATION :

GCH-0186

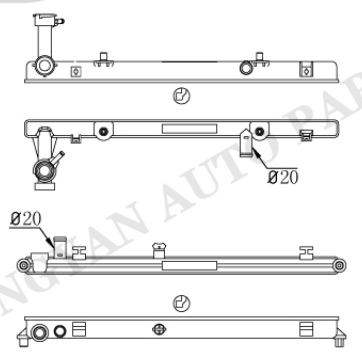

GCH-0187

Tank size :(R8×4.6×5.5×33×589.8)
OEM :
DPI :
NISSENS :
APPLICATION :

HONGYAN AUTO PARTS

GCH-0188

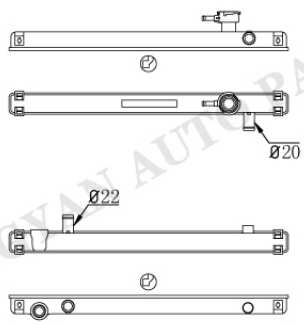

GCH-0189

Tank size :(R10×4.8×5.2×40×524)
OEM :
DPI :
NISSENS :
APPLICATION :

GCH-0190

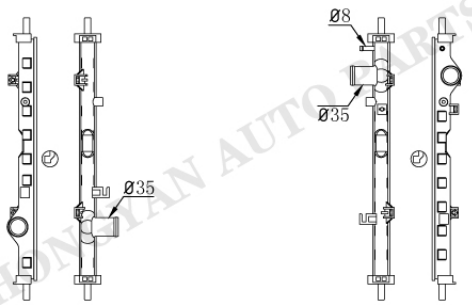

GCH-0191

Tank size :(R8×5×5×32×457)
OEM :
DPI :
NISSENS :
APPLICATION :

GCH-0192AT/MT

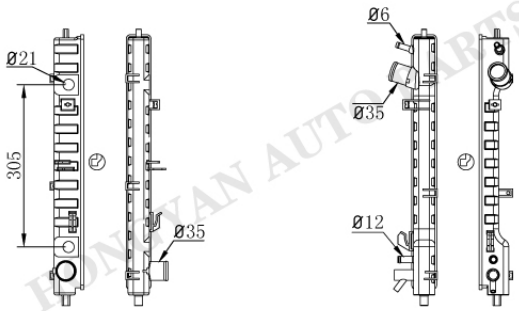

GCH-0193

Tank size :(R8×4.6×5.5×46.6×478.6)
OEM :
DPI :
NISSENS :
APPLICATION :

GCH-0194

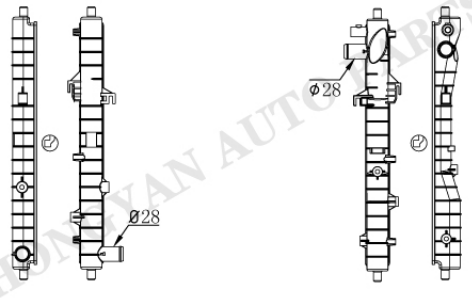

GCH-0195

Tank size :(R7×4.5×4.5×45.6×456.2)
OEM :
DPI :
NISSENS :
APPLICATION :

HONGYAN AUTO PARTS

CHINSES CAR

GCH-0196

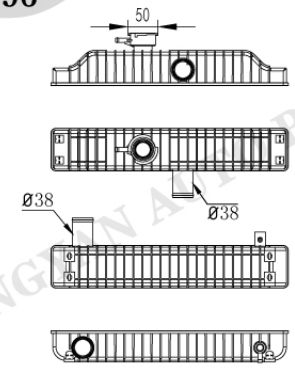

GCH-0197

Tank size :(R9.5×5×5.5×80×446)
OEM :
DPI :
NISSENS :
APPLICATION :

GCH-0198

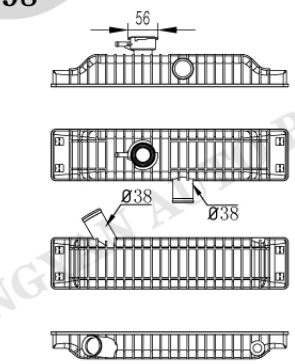

GCH-0199

Tank size :(R9.5×5×5.5×97×446)
OEM :
DPI :
NISSENS :
APPLICATION :

GCH-0200

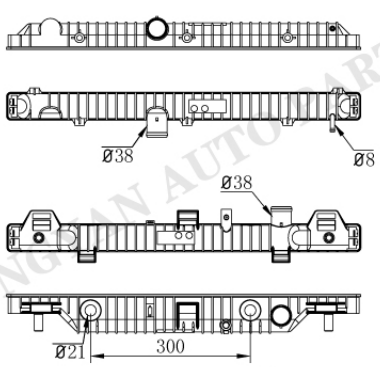

GCH-0201AT/MT

Tank size :(R8.5×4.5×4.5×52.8×665.4)
OEM :
DPI :
NISSENS :
APPLICATION :

GCH-0202

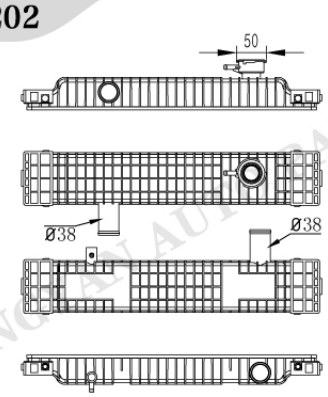

GCH-0203

Tank size :(R9.5×5×5.5×97×544)
OEM :
DPI :
NISSENS :
APPLICATION :

GCH-28

GCH-0204

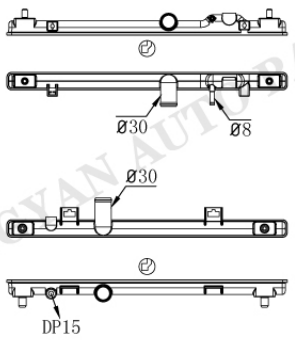

GCH-0205

Tank size :(R9×4.5×5×33×527.5)
OEM :
DPI :
NISSENS :
APPLICATION :
CHERY MVM 110S

GCH-0206

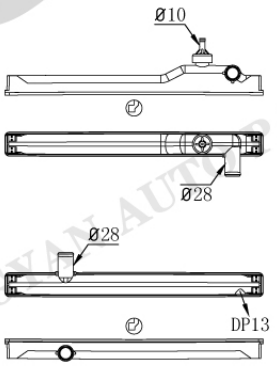

GCH-0207

Tank size :(R8.5X4.5X5X45X486)
OEM :
DPI :
NISSENS :
APPLICATION :

GCH-0208

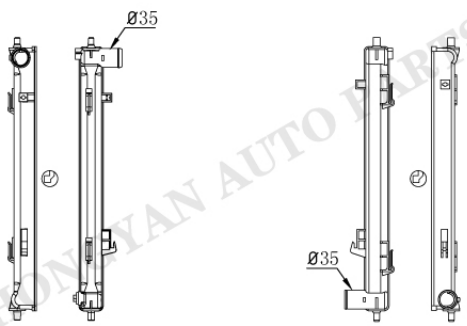

GCH-0096

Tank size :(R9×4.5×4.5×46.5×496.5)
OEM :
DPI :
NISSENS :
APPLICATION :
江淮S5

GCH-0209

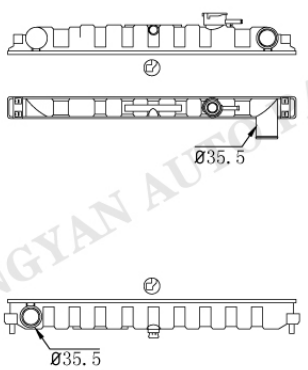

GCH-0210

Tank size :(R8.5×4.5×4.8×53×542)
OEM :
DPI :
NISSENS :
APPLICATION :
DFAC

CHINSES CAR

GCH-0211

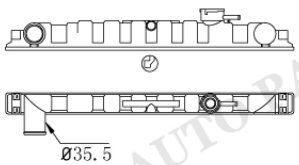

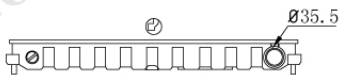

GCH-0212

Tank size :(R8.5×4.5×4.8×53×542)
OEM :
DPI :
NISSENS :
APPLICATION :
DFAC

GCH-0213

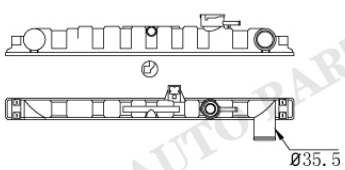



GCH-0214

Tank size :(R8.5×4.5×4.8×53×542)
OEM :
DPI :
NISSENS :
APPLICATION :
DFAC

GCH-0215

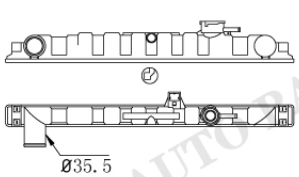

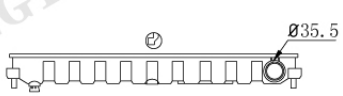

GCH-0216

Tank size :(R8.5×4.5×4.8×53×542)
OEM :
DPI :
NISSENS :
APPLICATION :
DFAC

GCH-0215

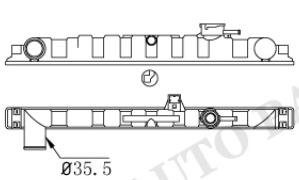

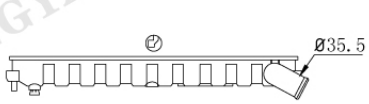

GCH-0217

Tank size :(R8.5×4.5×4.8×53×542)
OEM :
DPI :
NISSENS :
APPLICATION :
DFAC

HONGYAN AUTO PARTS

GCH-0218

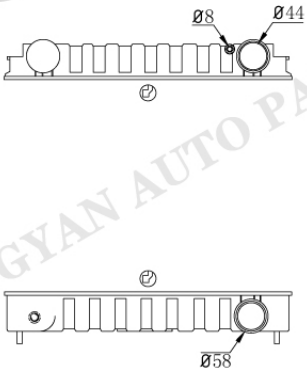

GCH-0219

Tank size : (R8.5×4.5×4.8×69×542)
OEM :
DPI :
NISSENS :
APPLICATION :
DFAC

GCH-0220

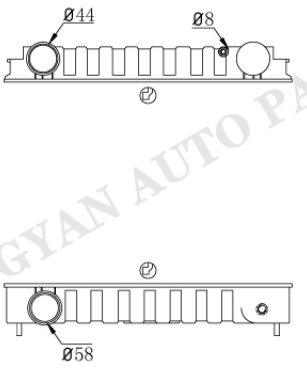

GCH-0221

Tank size : (R8.5×4.5×4.8×69×542)
OEM :
DPI :
NISSENS :
APPLICATION :
DFAC

GCH-0222

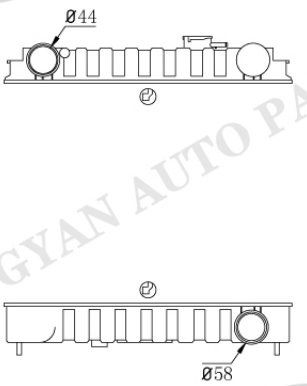

GCH-0223

Tank size : (R8.5×4.5×4.8×69×542)
OEM :
DPI :
NISSENS :
APPLICATION :
DFAC

GCH-0224

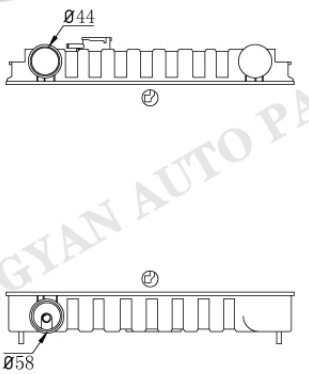

GCH-0225

Tank size : (R8.5×4.5×4.8×69×542)
OEM :
DPI :
NISSENS :
APPLICATION :
DFAC

HONGYAN AUTO PARTS

CHINSES CAR

GCH-0226

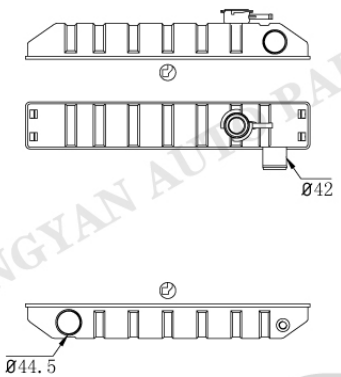

GCH-0227

Tank size :(R8.5×5×5×60×535)
OEM :
DPI :
NISSENS :
APPLICATION :
JAC Z105 江淮

GCH-0228

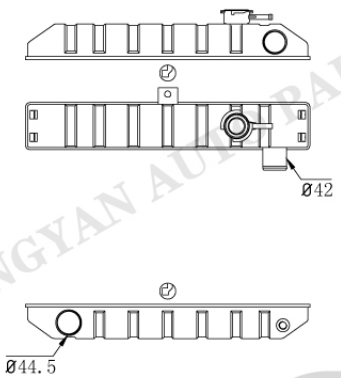

GCH-0227

Tank size :(R8.5×5×5×60×535)
OEM :
DPI :
NISSENS :
APPLICATION :
JAC Z105 江淮

GCH-0229

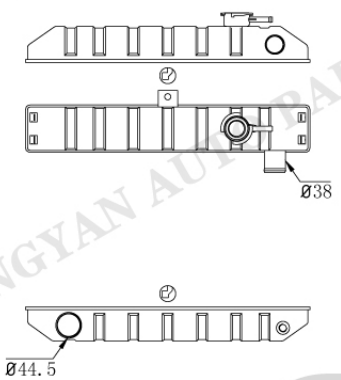

GCH-0227

Tank size :(R8.5×5×5×60×535)
OEM :
DPI :
NISSENS :
APPLICATION :
JAC Z105 江淮

GCH-0230

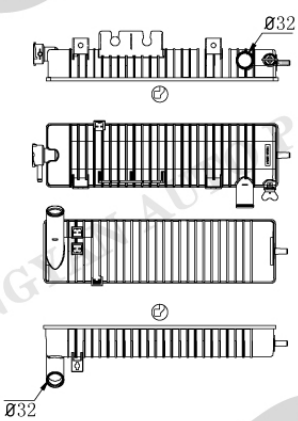

GCH-0231

Tank size :(R8.5×5×6×119.9×436.4)
OEM :U0841010200 U0841010300
DPI :
NISSENS :
APPLICATION :
FD35

GCH-32

GCH-0232

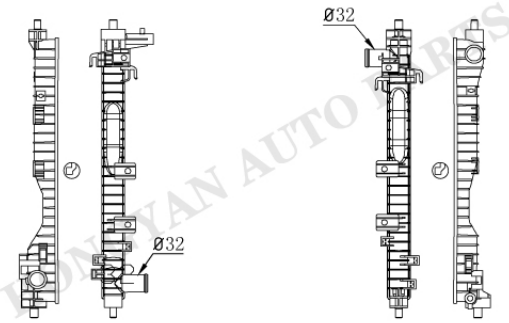

GCH-0233

Tank size :(R6×4.2×5×41.5×498.5)
OEM :
DPI :
NISSENS :
APPLICATION :
H6 运动版

GCH-0232

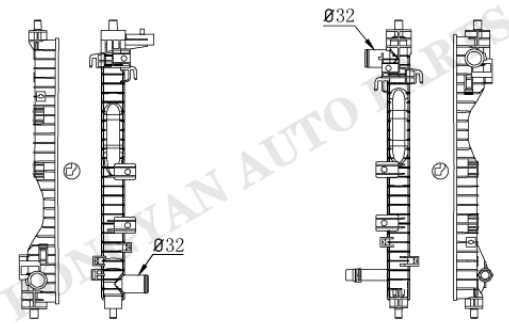

GCH-0234

Tank size :(R6×4.2×5×41.5×498.5)
OEM :
DPI :
NISSENS :
APPLICATION :
H6 酷派

GCH-0235

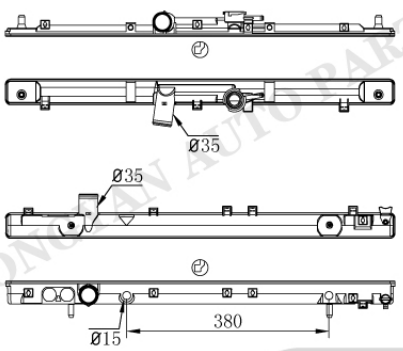

GCH-0236AT/MT

Tank size :(R10×4.5×5×47×731.5)
OEM :
DPI :
NISSENS :
APPLICATION :
国产中华

Tank size :(R××××)
OEM :
DPI :
NISSENS :
APPLICATION :

HONGYAN AUTO PARTS

CHINSES CAR

	Tank size : OEM : DPI : NISSENS : APPLICATION :
	Tank size : OEM : DPI : NISSENS : APPLICATION :
	Tank size : OEM : DPI : NISSENS : APPLICATION :
	Tank size : OEM : DPI : NISSENS : APPLICATION :

HONGYAN AUTO PARTS

TRCAT-0001

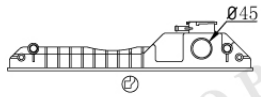

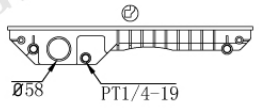

TRCAT-0002

Tank size :(R6×5×6×124×460.5)
OEM :
DPI :
NISSENS :
APPLICATION :
CAT-181

TRCAT-0003

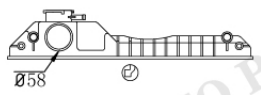

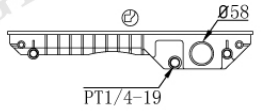

TRCAT-0004

Tank size :(R6×5×6×124×460.5)
OEM :
DPI :
NISSENS :
APPLICATION :
CAT-181

TRCAT-0005

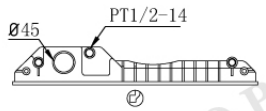

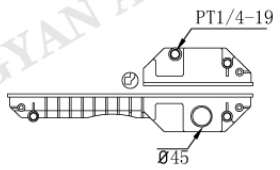

TRCAT-0006

Tank size :(R6×5×6×124×460.5)
OEM :
DPI :
NISSENS :
APPLICATION :
CAT-181

TRCAT-0007

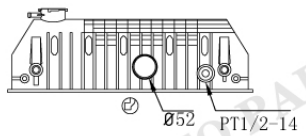

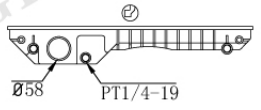

TRCAT-0002

Tank size :(R6×5×6×124×460.5)
OEM :
DPI :
NISSENS :
APPLICATION :
CAT-181

HONGYAN AUTO PARTS

CAT CASE

TRCAT-0008

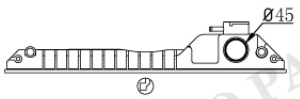

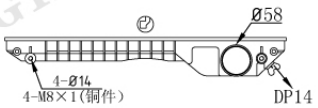

TRCAT-0009

Tank size :(R6×5×6×124×528)
OEM :
DPI :
NISSENS :
APPLICATION :
CAT-208

TRCAT-0010

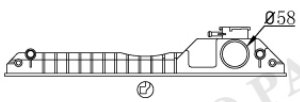

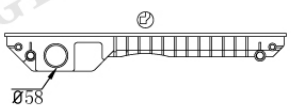

TRCAT-0011

Tank size :(R6×5×6×124×528)
OEM :
DPI :
NISSENS :
APPLICATION :
CAT-208

TRCAT-0012

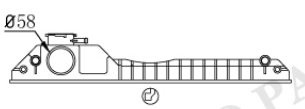

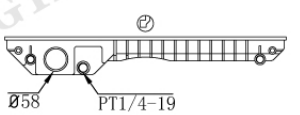

TRCAT-0013

Tank size :(R6×5×6×124×528)
OEM :
DPI :
NISSENS :
APPLICATION :
CAT-208

TRCAT-0014

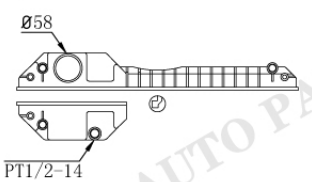

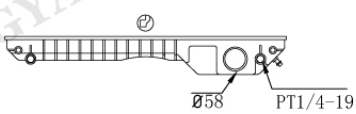

TRCAT-0015

Tank size :(R6×5×6×124×528)
OEM :
DPI :
NISSENS :
APPLICATION :
CAT-208

TRCAT-2

HONGYAN AUTO PARTS

TRCAT-0016

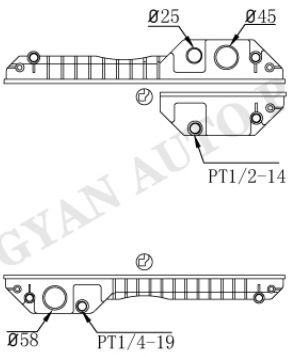

TRCAT-0013

Tank size :(R6×5×6×124×528)
OEM :
DPI :
NISSENS :
APPLICATION :
CAT-208

TRCAT-0017

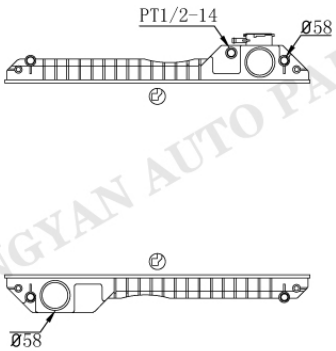

TRCAT-0018

Tank size :(R6×5×6×124×573)
OEM :
DPI :
NISSENS :
APPLICATION :
CAT-225

TRCAT-0019

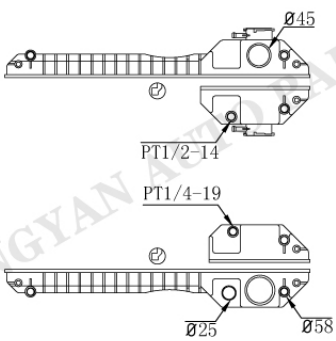

TRCAT-0020

Tank size :(R6×5×6×124×573)
OEM :
DPI :
NISSENS :
APPLICATION :
CAT-225

TRCAT-0021

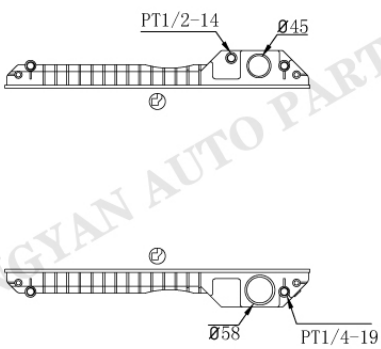

TRCAT-0022

Tank size :(R6×5×6×124×573)
OEM :
DPI :
NISSENS :
APPLICATION :
CAT-225

HONGYAN AUTO PARTS

CAT CASE

TRCAT-0023

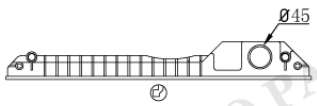

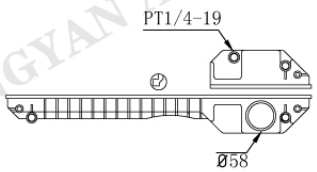

TRCAT-0024

Tank size :(R6×5×6×124×573)
OEM :
DPI :
NISSENS :
APPLICATION :
CAT-225

TRCAT-0025

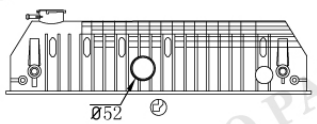

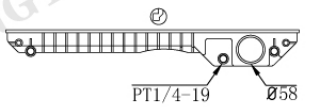

TRCAT-0026

Tank size :(R6×5×6×124×573)
OEM :
DPI :
NISSENS :
APPLICATION :
CAT-225

TRCAT-0027

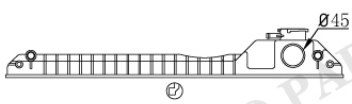

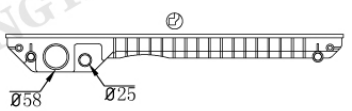

TRCAT-0028

Tank size :(R6×5×6×124×634)
OEM :
DPI :
NISSENS :
APPLICATION :
CAT-252

TRCAT-0029

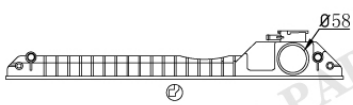

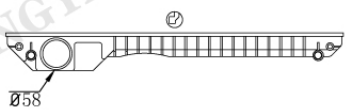

TRCAT-0030

Tank size :(R6×5×6×124×634)
OEM :
DPI :
NISSENS :
APPLICATION :
CAT-252

HONGYAN AUTO PARTS

CAT CASE

TRCAT-0031

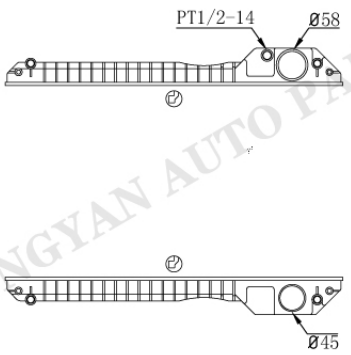

TRCAT-0032

Tank size :(R6×5×6×124×634)
OEM :
DPI :
NISSENS :
APPLICATION :
CAT-252

TRCAT-0033

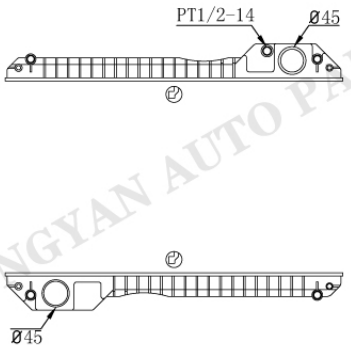

TRCAT-0034

Tank size :(R6×5×6×124×634)
OEM :
DPI :
NISSENS :
APPLICATION :
CAT-252

TRCAT-0035

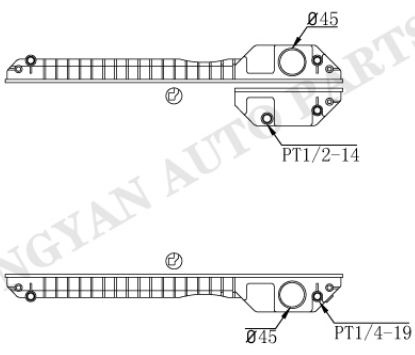

TRCAT-0036

Tank size :(R6×5×6×124×634)
OEM :
DPI :
NISSENS :
APPLICATION :
CAT-252

TRCAT-0037

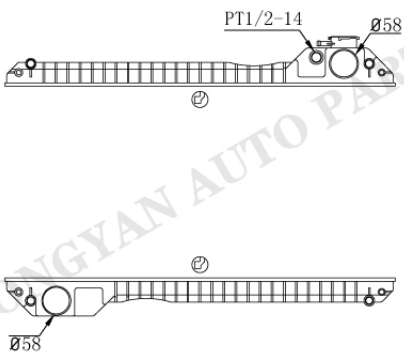

TRCAT-0038

Tank size :(R6×5×6×124×733)
OEM :
DPI :
NISSENS :
APPLICATION :
CAT-287

HONGYAN AUTO PARTS

CAT CASE

TRCAT-0039

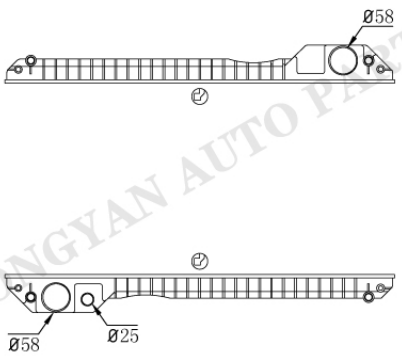

TRCAT-0040

Tank size :(R6×5×6×124×733)
OEM :
DPI :
NISSENS :
APPLICATION :
CAT-287

TRCAT-0041

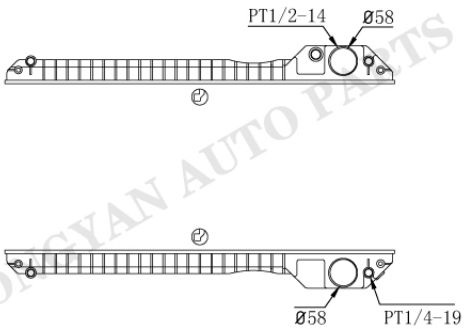

TRCAT-0042

Tank size :(R6×5×6×124×733)
OEM :
DPI :
NISSENS :
APPLICATION :
CAT-287

TRCAT-0043

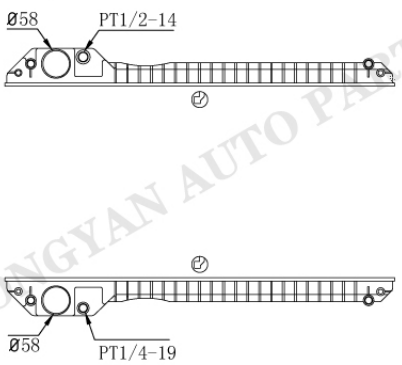

TRCAT-0044

Tank size :(R6×5×6×124×733)
OEM :
DPI :
NISSENS :
APPLICATION :
CAT-287

TRCAT-0045

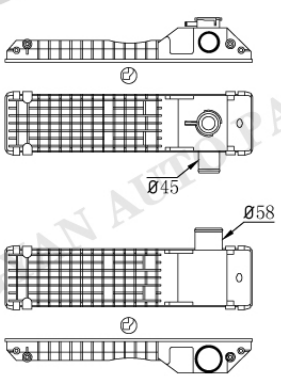

TRCAT-0046

Tank size :(R6×5×6×124×528)
OEM :
DPI :
NISSENS :
APPLICATION :

TRCAT-6

HONGYAN AUTO PARTS

CAT CASE

TRCAT-0047

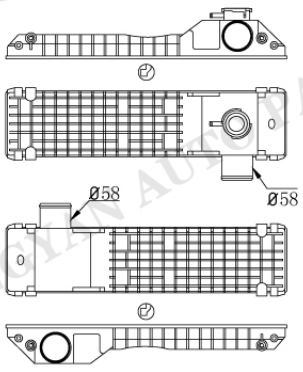

TRCAT-0048

Tank size :(R6×5×6×124×528)
OEM :
DPI :
NISSENS :
APPLICATION :

TRCAT-0049

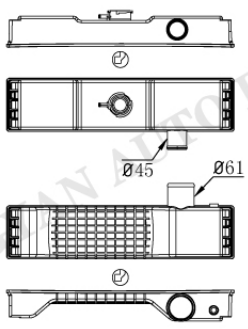

TRCAT-0050

Tank size :(R6×5×6×124×528)
OEM :
DPI :
NISSENS :
APPLICATION :

TRCAT-0051

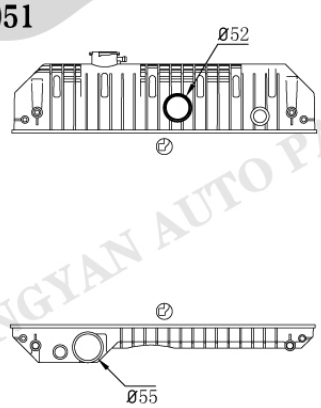

TRCAT-0052

Tank size :(R6×5×6×124×573)
OEM :
DPI :
NISSENS :
APPLICATION :

TRCAT-0053

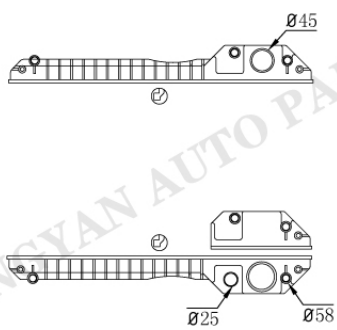

TRCAT-0020

Tank size :(R6×5×6×124×573)
OEM :
DPI :
NISSENS :
APPLICATION :
CAT-225

HONGYAN AUTO PARTS

CAT CASE

TRCAT-0054

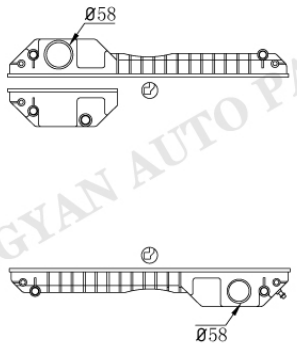

TRCAT-0015

Tank size :(R6×5×6×124×528)
OEM :
DPI :
NISSENS :
APPLICATION :
CAT-208

TRCAT-0055

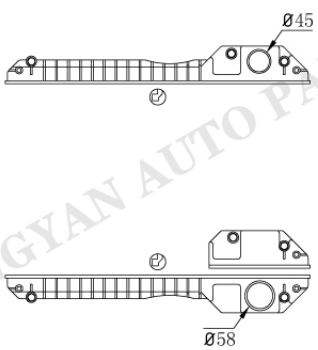

TRCAT-0056

Tank size :(R6×5×6×124×573)
OEM :
DPI :
NISSENS :
APPLICATION :

TRCAT-0057

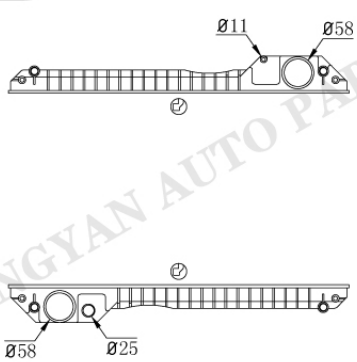

TRCAT-0058

Tank size :(R6×5×6×124×640.5)
OEM :
DPI :
NISSENS :
APPLICATION :

TRCAT-0059

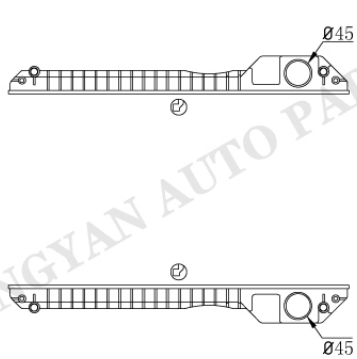

TRCAT-0060

Tank size :(R6×5×6×124×640.5)
OEM :
DPI :
NISSENS :
APPLICATION :

TRCAT-8

HONGYAN AUTO PARTS

CAT CASE

TRCAT-0061

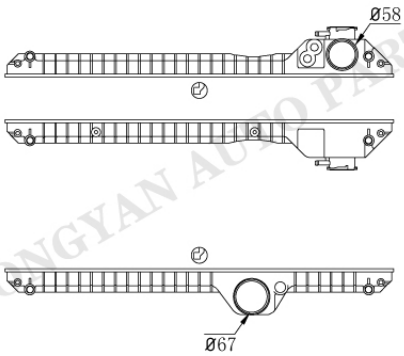

TRCAT-0062

Tank size :(R6×5×6×124×730.5)
OEM :
DPI :
NISSENS :
APPLICATION :

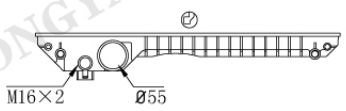

TRCAT-0064

Tank size :(R6×5×6×124×573)
OEM :
DPI :
NISSENS :
APPLICATION :

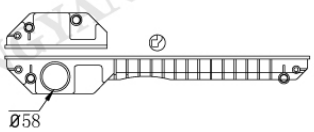

TRCAT-0066

Tank size :(R6×5×6×124×573)
OEM :
DPI :
NISSENS :
APPLICATION :

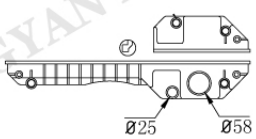

TRCAT-0068

Tank size :(R6×5×6×124×460.5)
OEM :
DPI :
NISSENS :
APPLICATION :

HONGYAN AUTO PARTS

CAT CASE

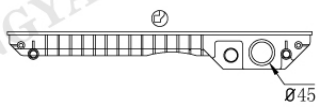 TRCAT-0070	Tank size :(R6×5×6×124×573) OEM : DPI : NISSENS : APPLICATION :
	Tank size : OEM : DPI : NISSENS : APPLICATION :
	Tank size : OEM : DPI : NISSENS : APPLICATION :
	Tank size : OEM : DPI : NISSENS : APPLICATION :

HONGYAN AUTO PARTS

TRDAE-0001

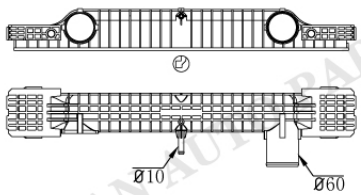

Tank size :(R7.5×5×5×73×628)
OEM :
DPI :
NISSENS :
APPLICATION :
DAEWOO BUS 106

HONGYAN AUTO PARTS

DAF

TRDAF-0001

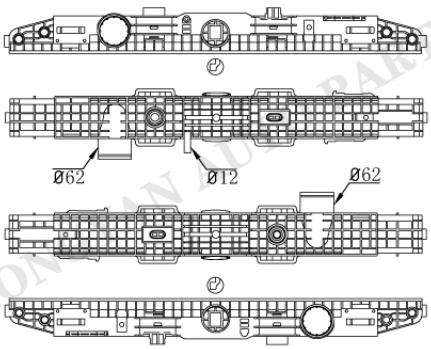

TRDAF-0002

Tank size : (R8×5.2×5.1×71.5×774)
OEM : 1326966 1617340/41/42
1288560 393433/34 0076449
DPI :
NISSENS :614170 61417A 61418
APPLICATION :
87-98 DAF F95/XF95

TRDAF-0003

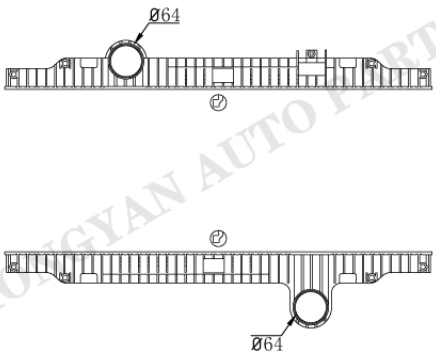

TRDAF-0004

Tank size :(R8×5.5×5×71.6×802)
OEM :393433/4
DPI :
NISSENS :
APPLICATION :
87-93 DAF F95

TRDAF-0005

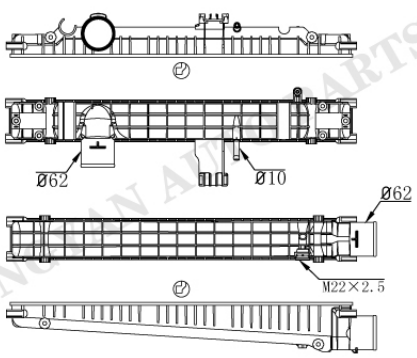

TRDAF-0006

Tank size :(R6×4.5×5.5×76×643)
OEM :
DPI :
NISSENS :
APPLICATION :
01- DAF CF 65

TRDAF-0007

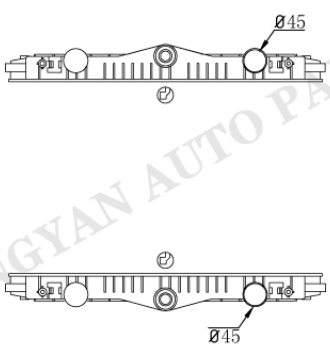

TRDAF-0008

Tank size :(77×588.5)
OEM : 1405413 1407725
DPI :
NISSENS :
APPLICATION :
98- DAF CF85

TRDAF-1

HONGYAN AUTO PARTS

TRDAF-0009

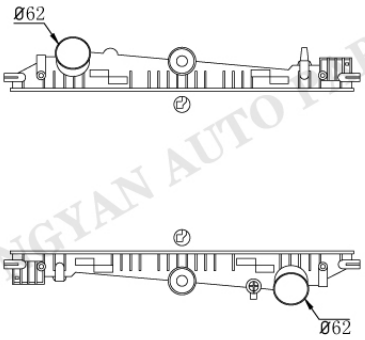

Tank size : (76.6×644.5)
OEM : 1241580/3 1281400 1831441
DPI :
NISSENS :
APPLICATION :
92-98 DAF CF85
00- DAF CF75

TRDAF-0010

Tank size :
OEM :
DPI :
NISSENS :
APPLICATION :

Tank size :
OEM :
DPI :
NISSENS :
APPLICATION :

Tank size :
OEM :
DPI :
NISSENS :
APPLICATION :

HONGYAN AUTO PARTS

FREIGHTLINER

TRFR-0001

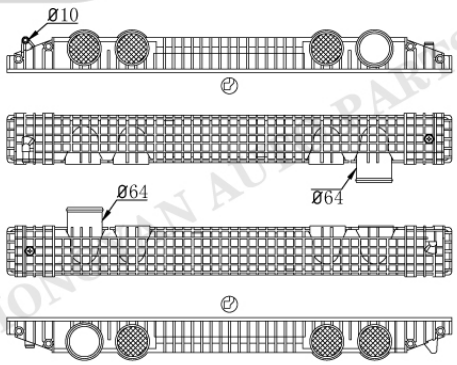

TRFR-0002

Tank size :(R5.5×5×5.5×88×835)
OEM :
DPI :
NISSENS :
APPLICATION :
FREIGHTLINER

TRFR-0003

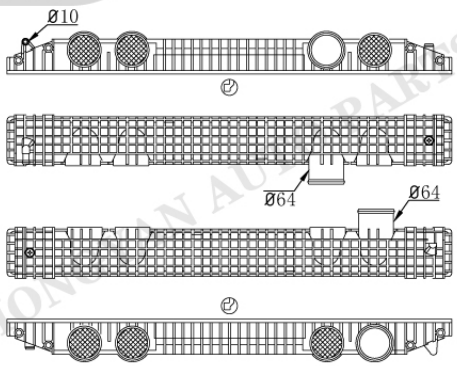

TRFR-0004

Tank size :(R5.5×5×5.5×88×835)
OEM :
DPI :
NISSENS :
APPLICATION :
FREIGHTLINER

TRFR-0005

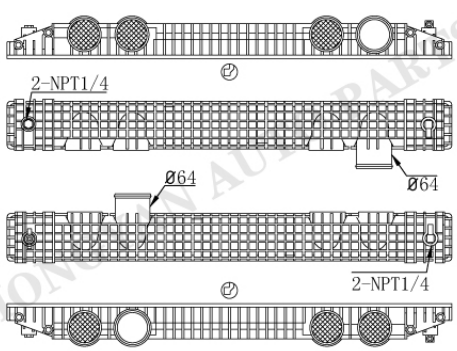

TRFR-0006

Tank size :(R5.5×5×5.5×88×835)
OEM :
DPI :
NISSENS :
APPLICATION :
FREIGHTLINER

TRFR-0007

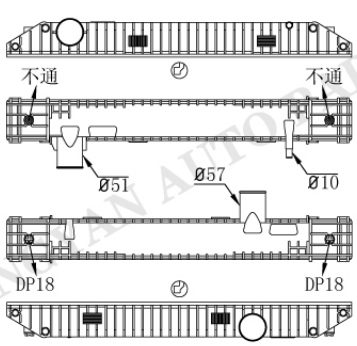

TRFR-0008

Tank size :(R5.5×4.8×5.4×76.5×647.5)
OEM :
DPI :
NISSENS :
APPLICATION :
FREIGHTLINER

TRFR-1

FREIGHTLINER

TRFR-0009

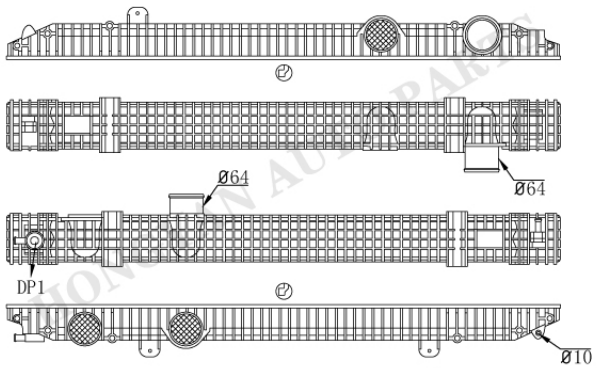

TRFR-0010

Tank size :(R6×5×5×88×1042)
OEM :
DPI :
NISSENS :
APPLICATION :
FREIGHTLINER

TRFR-0011

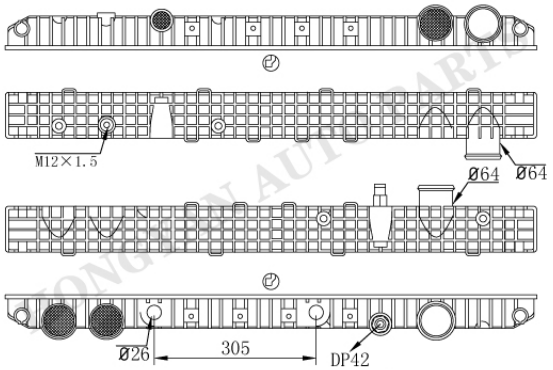

TRFR-0012AT/MT

Tank size :(R9×6.5×5.5×85×998)
OEM :
DPI :
NISSENS :
APPLICATION :
FREIGHTLINER

TRFR-0011

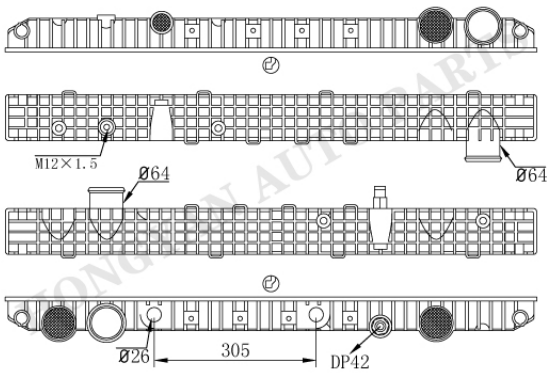

TRFR-0013AT/MT

Tank size :(R9×6.5×5.5×85×998)
OEM :
DPI :
NISSENS :
APPLICATION :
FREIGHTLINER

TRFR-0014

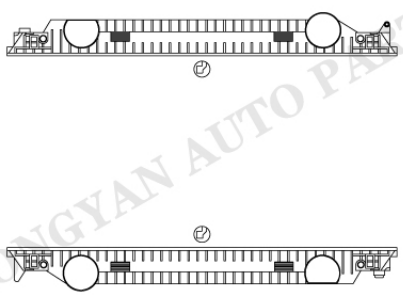

TRFR-0015

Tank size :(R5.5×88×731.7)
OEM :
DPI :
NISSENS :
APPLICATION :
FREIGHTLINER

HONGYAN AUTO PARTS

FREIGHTLINER

TRFR-0007

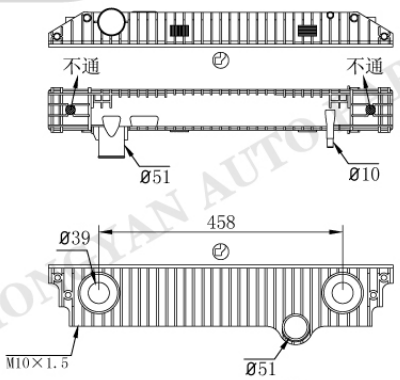

TRFR-0016AT/MT

Tank size :(R5.5×4.8×5.4×76.5×647.5)
OEM :
DPI :
NISSENS :
APPLICATION :
FREIGHTLINER

TRFR-0017

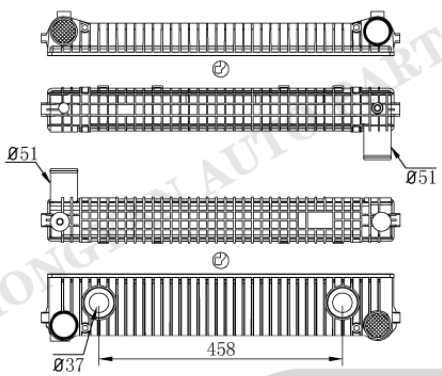

TRFR-0018AT/MT

Tank size :(R8×6×6×80×652)
OEM :
DPI :
NISSENS :
APPLICATION :
FREIGHTLINER

Tank size :
OEM :
DPI :
NISSENS :
APPLICATION :

Tank size :
OEM :
DPI :
NISSENS :
APPLICATION :

HONGYAN AUTO PARTS

GENERATOR

TRGEN-0001

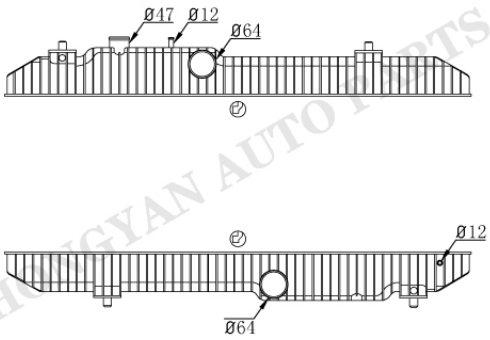

TRGEN-0002

Tank size :(R6.5×5×6×71.5×1079)
OEM :
DPI :
NISSENS :
APPLICATION :
GENERATOR PERKINS

TRGEN-0003

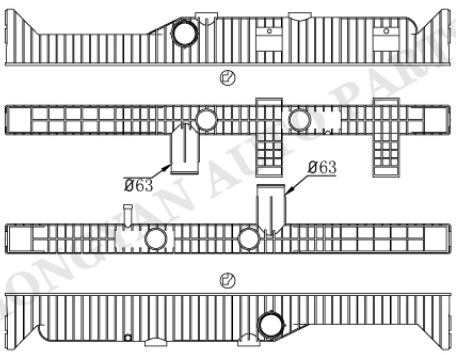

TRGEN-0004

Tank size :(R6.5×5×6×71.5×1079)
OEM :
DPI :
NISSENS :
APPLICATION :
GENERATOR PERKINS

TRGEN-0005

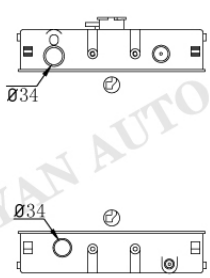

TRGEN-0006

Tank size :(R9×4.5×5×54×351)
OEM :MN422000-34310P
DPI :
NISSENS :
APPLICATION :
PRRKINS TPN440

TRGEN-0007

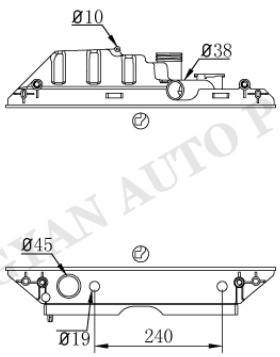

TRGEN-0008AT/MT

Tank size :(R6.5×5×5.5×111×507)
OEM :564066407740A/C
DPI :
NISSENS :
APPLICATION :

HONGYAN AUTO PARTS

GENERATOR

TRGEN-0009

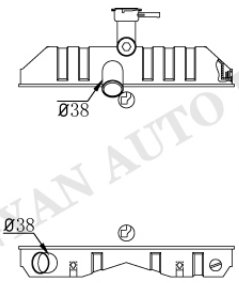

Tank size :(R9×5×5×76×405)
OEM :3599709M92
DPI :
NISSENS :
APPLICATION :

TRGEN-0010

TRGEN-0011

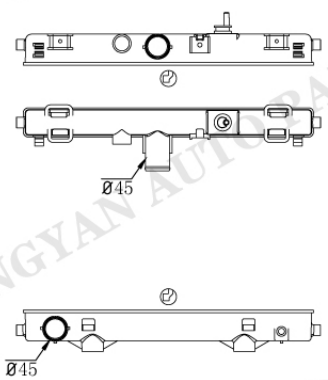

Tank size :(R9.5×4.5×5×55×545)
OEM :
DPI :
NISSENS :
APPLICATION :
PERKINS

TRGEN-0012

TRGEN-0013

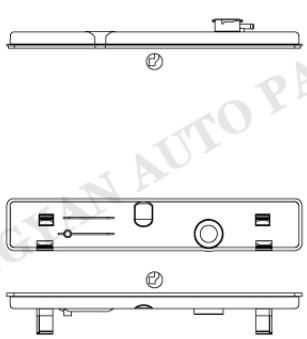

Tank size :(R14××98×555)
OEM :
DPI :
NISSENS :
APPLICATION :
PERKINS

TRGEN-0014

TRGEN-0015

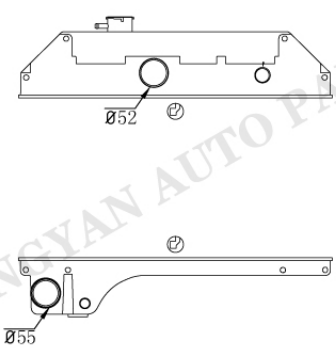

Tank size :(R6.5×5×5.5×111.5×589)
OEM :
DPI :
NISSENS :
APPLICATION :

TRGEN-0016

HONGYAN AUTO PARTS

TRGEN-2

GENERATOR

TRGEN-0017

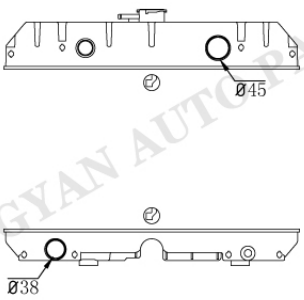

TRGEN-0018

Tank size :(R6.5×5×5.5×95.5×556)
OEM :
DPI :
NISSENS :
APPLICATION :

TRGEN-0019

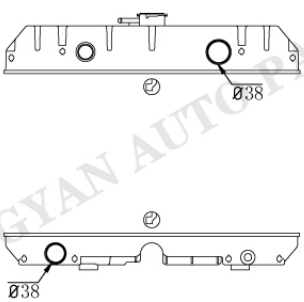

TRGEN-0018

Tank size :(R6.5×5×5.5×95.5×556)
OEM :
DPI :
NISSENS :
APPLICATION :

TRGEN-0020

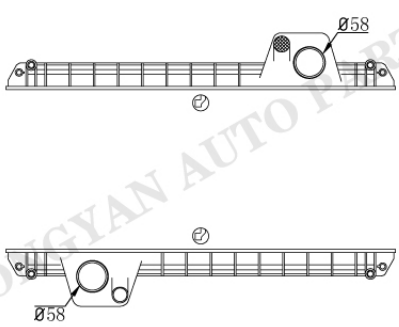

TRGEN-0021

Tank size :(R6×5×6×146.5×732)
OEM :
DPI :
NISSENS :
APPLICATION :

TRGEN-0022

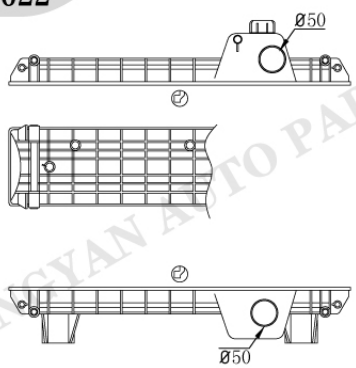

TRGEN-0023

Tank size :(R6×5×6×146.5×641.5)
OEM :
DPI :
NISSENS :
APPLICATION :

HONGYAN AUTO PARTS

INTERNATIONAL

TRINT-0001

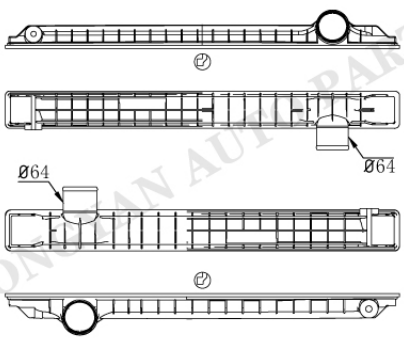

TRINT-0002

Tank size :(R9.5×6×5×76.5×740)
OEM :
DPI :
NISSENS :
APPLICATION :
INTERNATIONAL NAVISTAR

TRINT-0003

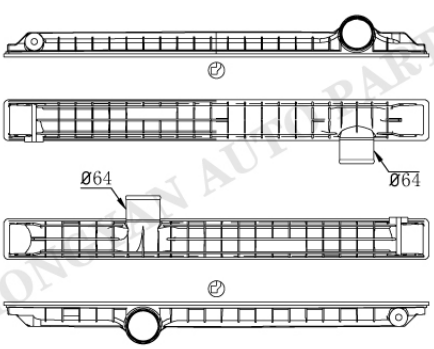

TRINT-0004

Tank size :(R9.5×6×5×76.5×798)
OEM :
DPI :
NISSENS :
APPLICATION :
INTERNATIONAL NAVISTAR

Tank size :
OEM :
DPI :
NISSENS :
APPLICATION :

Tank size :
OEM :
DPI :
NISSENS :
APPLICATION :

HONGYAN AUTO PARTS

TRIV-0001

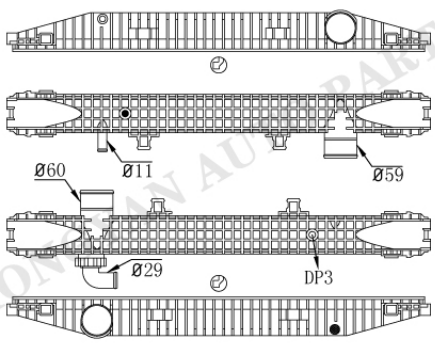

TRIV-0002

Tank size :(R8×5×5×71.2×773.5)
OEM :93192909/10 93160529/31
8139294 500384262/26345
DPI :
NISSENS :
APPLICATION :
95-99 IVECO EUROTRAKKER E34/37/42
95- IVECO EUROSTAR E24/27/30/34/38

TRIV-0001

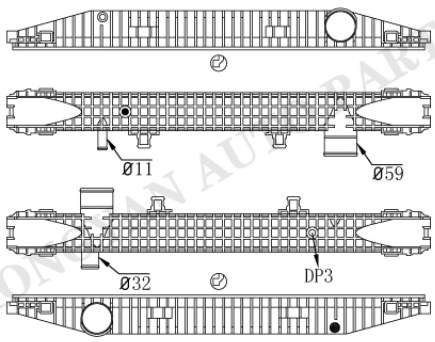

TRIV-0003

Tank size :(R8×5×5×71.2×773.5)
OEM :93192909/10 93160529/31
8139294 500384262/26345
DPI :
NISSENS :
APPLICATION :
95-99 IVECO EUROTRAKKER E34/37/42
95- IVECO EUROSTAR E24/27/30/34/38

TRIV-0004

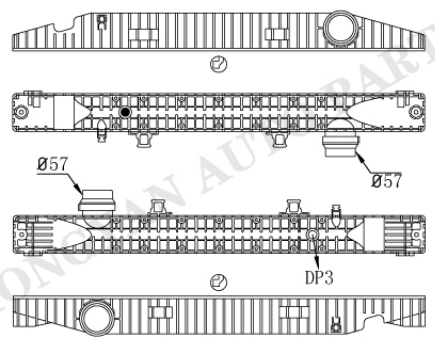

TRIV-0005

Tank size :(R8×5×5×71.2×773.5)
OEM :41214447 41218266 504011119
DPI :
NISSENS :
APPLICATION :
02- IVECO STRALIS

TRIV-0006

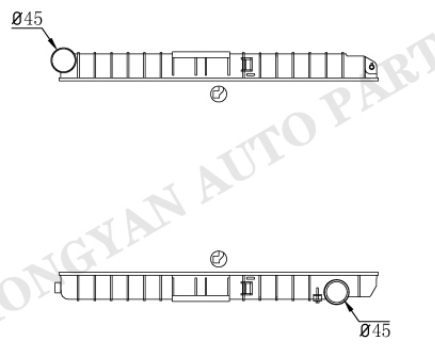

TRIV-0007

Tank size :(R5.5×59.4×600)
OEM :98425619/28/57 100304810
DPI :
NISSENS :
APPLICATION :
91- IVECO WUROTECH

HONGYAN AUTO PARTS

IVECO

TRIV-0008

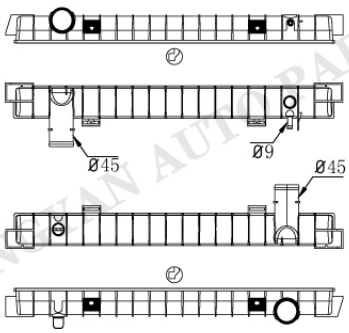

Tank size :(R4×4.5×4.5×59.5×602)
OEM :
DPI :
NISSENS :
APPLICATION :
01- IVECO EUROCARGO

TRIV-0009

Tank size :
OEM :
DPI :
NISSENS :
APPLICATION :

Tank size :
OEM :
DPI :
NISSENS :
APPLICATION :

Tank size :
OEM :
DPI :
NISSENS :
APPLICATION :

HONGYAN AUTO PARTS

MAN

TRMAN-0001

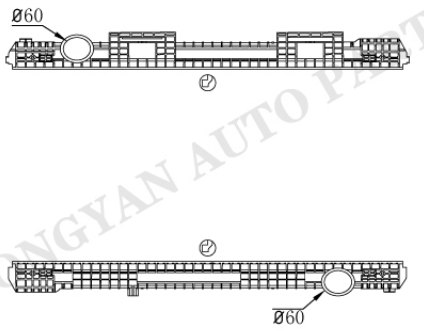

TRMAN-0002

Tank size :(R6.5×5×5×72×732.5)
OEM :81061016439/423/438/407
DPI :
NISSENS :
APPLICATION :
94-00 MAN F2000

TRMAN-0003

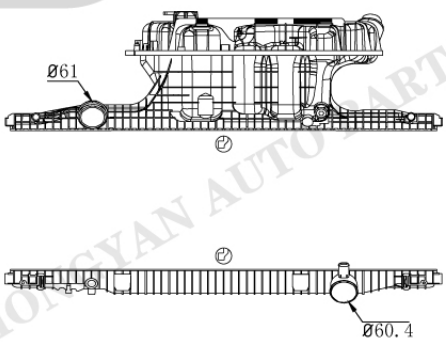

TRMAN-0004

Tank size :(92×961)
OEM :81061016459/58/68/72
DPI :
NISSENS :
APPLICATION :
06- MAN TGA

TRMAN-0005

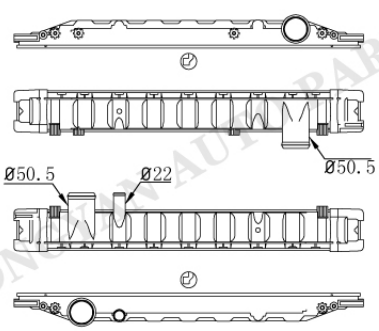

TRMAN-0006

Tank size :(R6×4.5×5.5×77×644)
OEM :
DPI :
NISSENS :
APPLICATION :
MAN L2000

TRMAN-0007

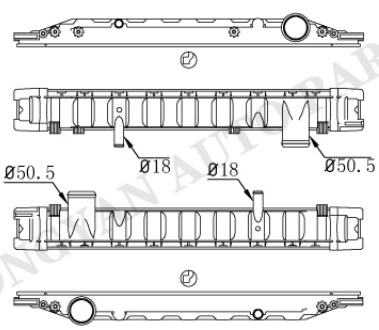

TRMAN-0008

Tank size :(R6×4.5×5.5×77×644)
OEM :
DPI :
NISSENS :
APPLICATION :
MAN L2000

MAN

TRMAN-0005

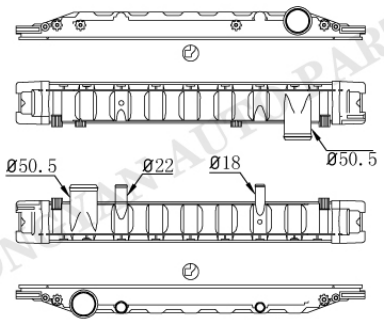

TRMAN-0009

Tank size : (R6×4.5×5.5×77×644)
OEM :
DPI :
NISSENS :
APPLICATION :
MAN L2000

Tank size :
OEM :
DPI :
NISSENS :
APPLICATION :

Tank size :
OEM :
DPI :
NISSENS :
APPLICATION :

Tank size :
OEM :
DPI :
NISSENS :
APPLICATION :

HONGYAN AUTO PARTS

MERCEDES BENZ

TRME-0001

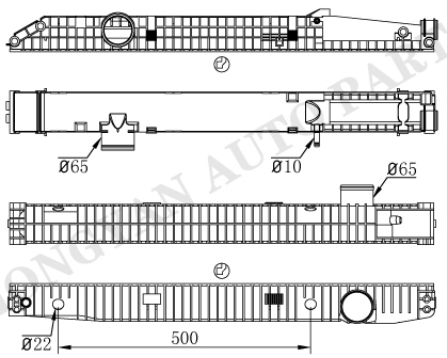

TRME-0002AT/MT

Tank size :(R8×4.5×5×76.5×842)
OEM :
DPI :
NISSENS :626490 62649A 62652A
626530 62653A 627910
APPLICATION :

TRME-0003

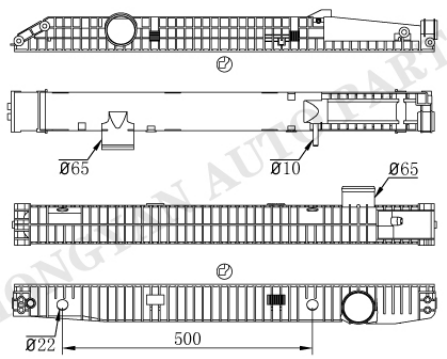

TRME-0004AT/MT

Tank size :(R8×6.5×5×81.3×831)
OEM :
DPI :
NISSENS :
APPLICATION :

TRME-0005

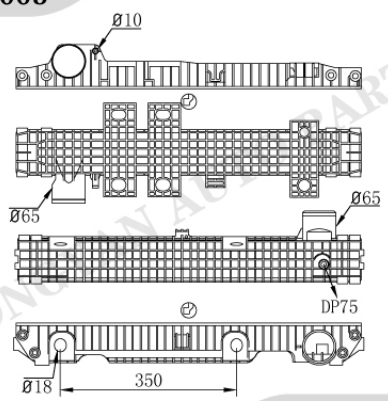

TRME-0006AT/MT

Tank size :(R8×6.5×5.5×95×678)
OEM :
DPI :
NISSENS :
APPLICATION :

TRME-0007

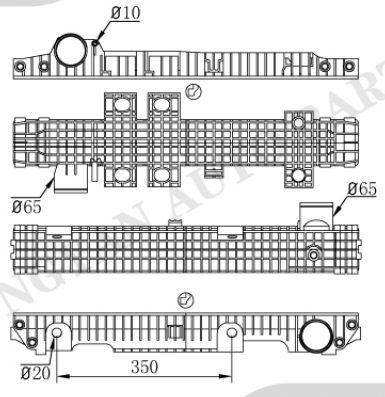

TRME-0008AT/MT

Tank size :(R7.5×5×5×90×678)
OEM :
DPI :
NISSENS :
APPLICATION :

MERCEDES BENZ

TRME-0009

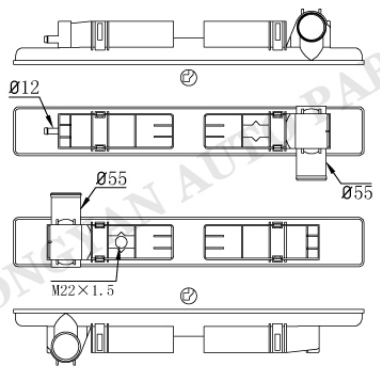

TRME-0010

Tank size :(R9×5×7.5×92×657.5)
OEM :
DPI :
NISSENS :
APPLICATION :

TRME-0011

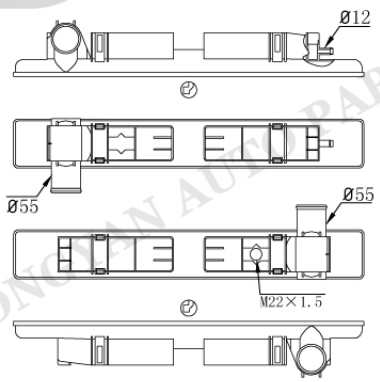

TRME-0012

Tank size :(R9×5×7.5×92×657.5)
OEM :
DPI :
NISSENS :
APPLICATION :

TRME-0013

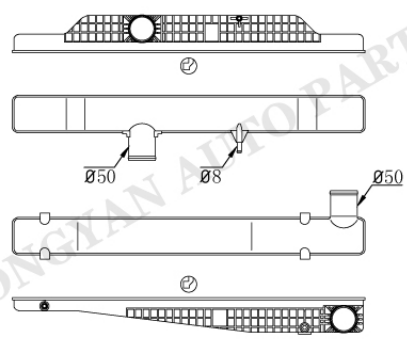

TRME-0014

Tank size :(R11×5×4.5×70×662)
OEM :
DPI :
NISSENS :
APPLICATION :
MERCEDES BENZ TRUCK

TRME-0015

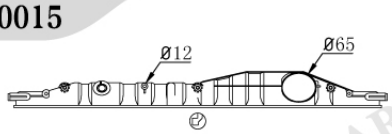



TRME-0016

Tank size :(76.5×690)
OEM :
DPI :
NISSENS :
APPLICATION :
00- MERCEDES BENZ C457
KASSBOHRER

HONGYAN AUTO PARTS

TRME-2

MERCEDES BENZ

TRME-0017

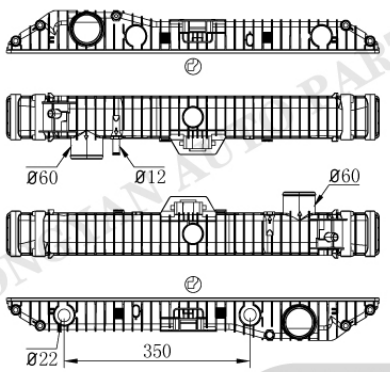

TRME-0018AT/MT

Tank size :(R8×4.5×5.5×78×701.5)
OEM :
DPI :
NISSENS :
APPLICATION :
02- MERCEDES BENZ AXOR

TRME-0019

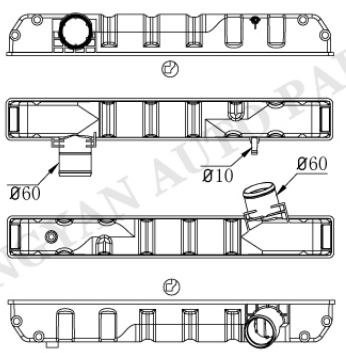

TRME-0020

Tank size :(R10××6×75.5×615)
OEM : 42066136KZ
DPI :
NISSENS :
APPLICATION :
TRUCK

TRME-0021AT/MT

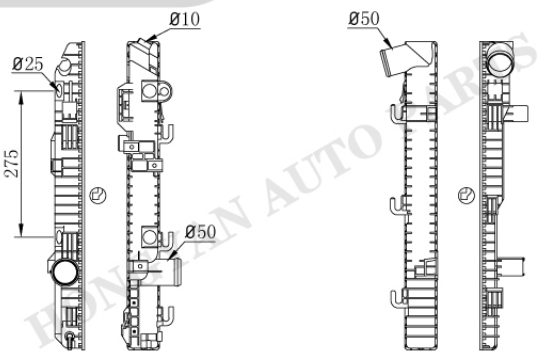

TRME-0022

Tank size :(R6.5×4.5×5.5×60.8×580.5)
OEM :
DPI :
NISSENS :
APPLICATION :

TRME-0023AT/MT

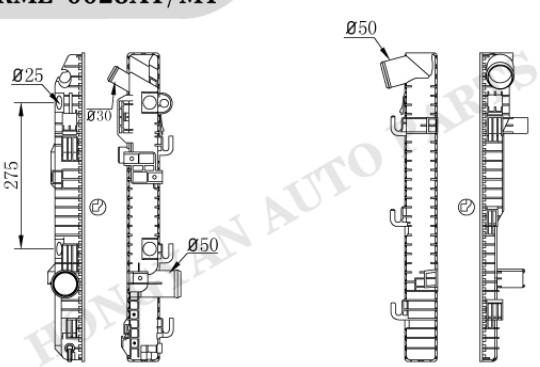

TRME-0022

Tank size :(R6.5×4.5×5.5×60.8×580.5)
OEM :
DPI :
NISSENS :
APPLICATION :

MERCEDES BENZ

TRME-0024AT/MT

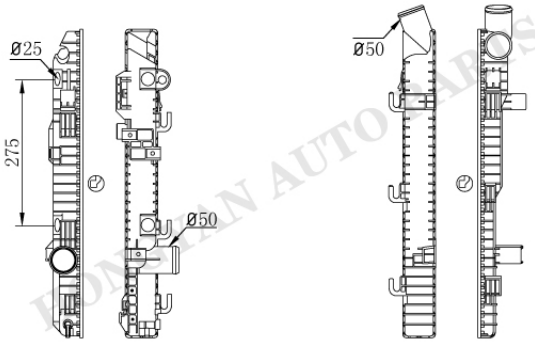

TRME-0025

Tank size :(R6.5×4.5×5.5×60.8×580.5)
OEM :
DPI :
NISSENS :
APPLICATION :

TRME-0026

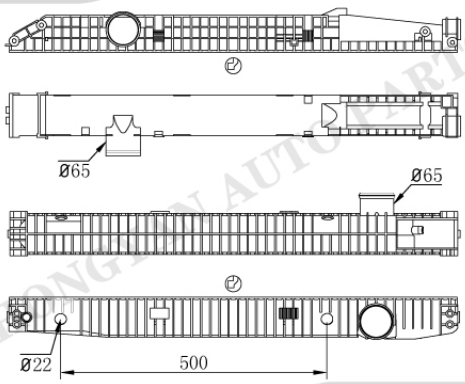

TRME-0002AT/MT

Tank size :(R8×4.5×5×76.5×842)
OEM :
DPI :
NISSENS :
APPLICATION :

Tank size :
OEM :
DPI :
NISSENS :
APPLICATION :

Tank size :
OEM :
DPI :
NISSENS :
APPLICATION :

HONGYAN AUTO PARTS

TRME-4

MERCEDES BENZ

	Tank size : OEM : DPI : NISSENS : APPLICATION :
	Tank size : OEM : DPI : NISSENS : APPLICATION :
	Tank size : OEM : DPI : NISSENS : APPLICATION :
	Tank size : OEM : DPI : NISSENS : APPLICATION :

HONGYAN AUTO PARTS

MACK

TRMK-0001

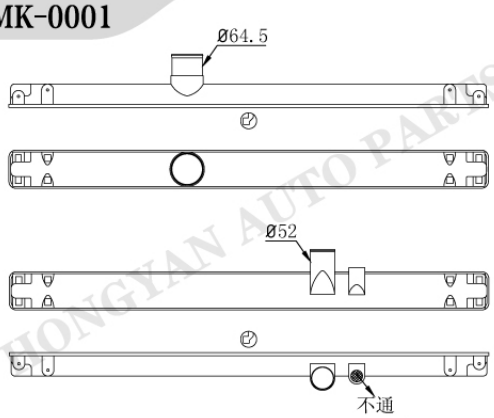

TRMK-0002

Tank size : (R15×5.8×7×81.5×1023.5)
OEM :20961530671 20961540849
DPI :
NISSENS :
APPLICATION :
MACK CH

TRMK-0003

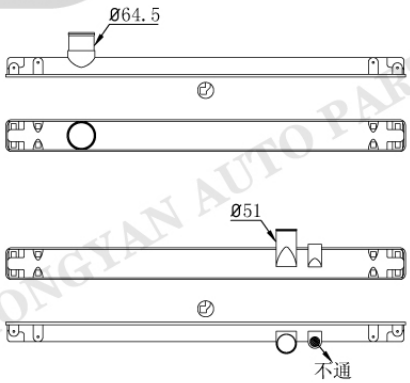

TRMK-0004

Tank size : (R15×5.8×7×81.5×895.5)
OEM :1220345 1220346
DPI :
NISSENS :
APPLICATION :
MACK RD/CV

Tank size :
OEM :
DPI :
NISSENS :
APPLICATION :

Tank size :
OEM :
DPI :
NISSENS :
APPLICATION :

HONGYAN AUTO PARTS

TRMK-1

TRPET

TRPET-0001

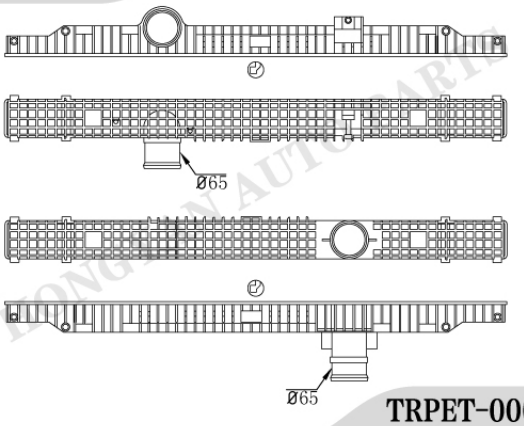

TRPET-0002

Tank size :(R7×5×5.5×72×942.2)
OEM :
DPI :
NISSENS :
APPLICATION :
PETERBILT

TRPET-0003

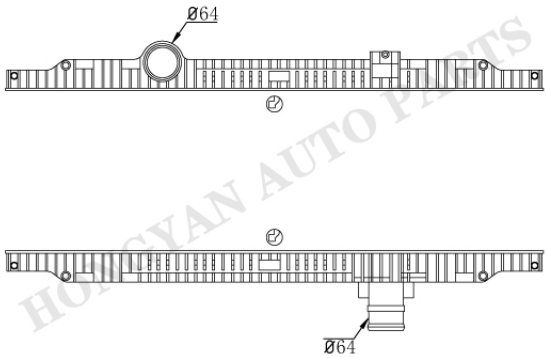

TRPET-0004

Tank size :(R7×5×5.5×72×1010)
OEM :
DPI :
NISSENS :
APPLICATION :
PETERBILT

Tank size :
OEM :
DPI :
NISSENS :
APPLICATION :

Tank size :
OEM :
DPI :
NISSENS :
APPLICATION :

HONGYAN AUTO PARTS

RVI

TRRVI-0001

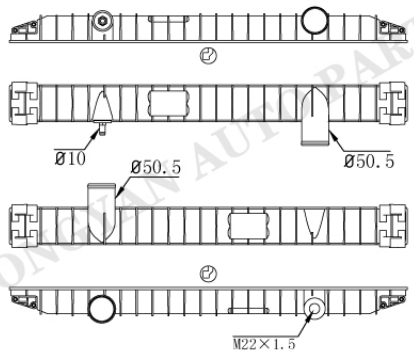

TRRVI-0002

Tank size :(R5×4.3×4.5×70×748)
OEM :5010230484/5 5010315636/8
DPI :
NISSENS :63775
APPLICATION :
96-05 RVI MAGUM

TRRVI-0003

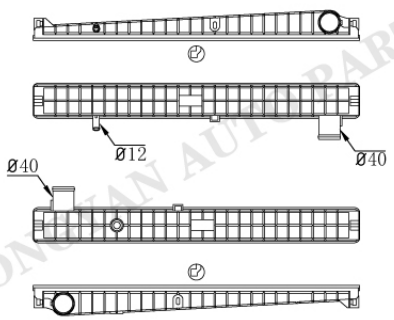

TRRVI-0004

Tank size :(R9.5×5×4.5×66×613)
OEM :7485000988
DPI :
NISSENS :6378750
APPLICATION :
04- RVI MASCOTT DXI

TRRVI-0005

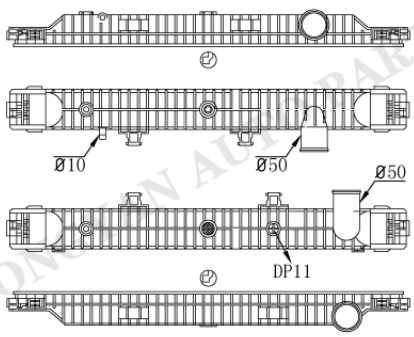

TRRVI-0006

Tank size :(R7×5×5.2×71.8×733)
OEM :
DPI :
NISSENS :
APPLICATION :
RVI

TRRVI-0007

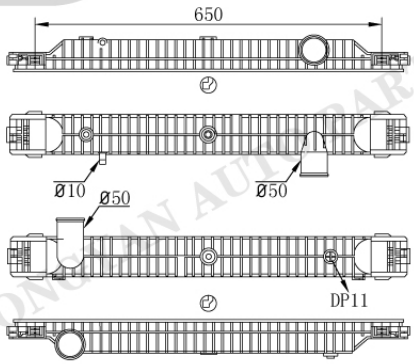

TRRVI-0008

Tank size :(R7×5×5.2×71.8×733)
OEM :501031584
DPI :
NISSENS :63787A
APPLICATION :
05- RVI PREMIUM

TRRVI-1

HONGYAN AUTO PARTS

TRRVI-0009

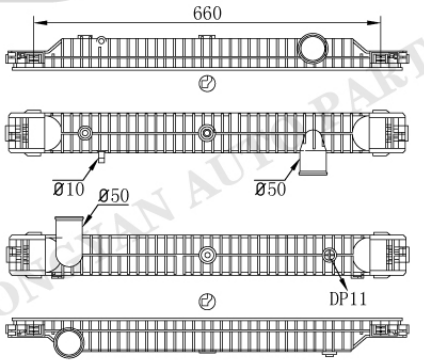

TRRVI-0008

Tank size :(R7×5×5.2×71.8×733)
OEM :
DPI :
NISSENS :
APPLICATION :
RVI

TRRVI-0010

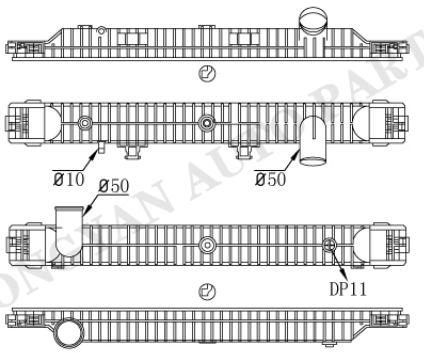

TRRVI-0008

Tank size :(R7×5×5.2×71.8×733)
OEM :
DPI :
NISSENS :
APPLICATION :
RVI

TRRVI-0011

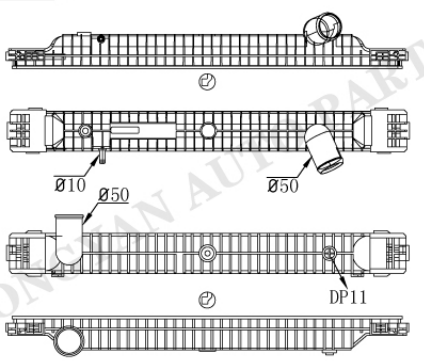

TRRVI-0008

Tank size :(R7×5×5.2×71.8×733)
OEM :
DPI :
NISSENS :
APPLICATION :
RVI

TRRVI-0012

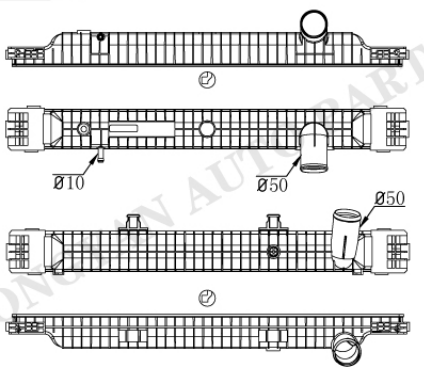

TRRVI-0013

Tank size :(R7×5×5.2×71.8×733)
OEM :
DPI :
NISSENS :
APPLICATION :
RVI

TRRVI-2

RVI

TRRVI-0014

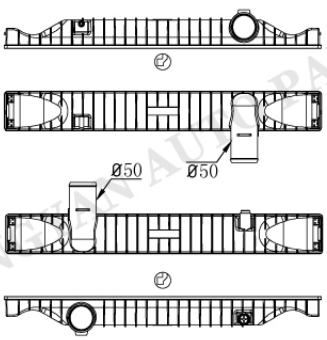

TRRVI-0015

Tank size : (R6×5.5×5×71.5×595)
OEM :
DPI :
NISSENS :
APPLICATION :
RENAULT

Tank size :
OEM :
DPI :
NISSENS :
APPLICATION :

Tank size :
OEM :
DPI :
NISSENS :
APPLICATION :

Tank size :
OEM :
DPI :
NISSENS :
APPLICATION :

HONGYAN AUTO PARTS

TRSC-0001

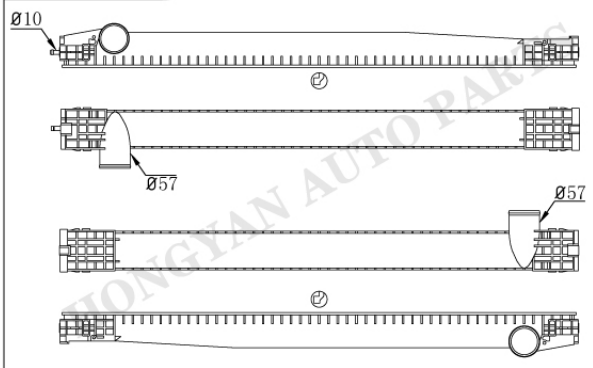

TRSC-0002

Tank size :(R8×5×4.8×72×965)
OEM :1327249
DPI :
NISSENS :64069A
APPLICATION :
95- SCANIA R114

TRSC-0003

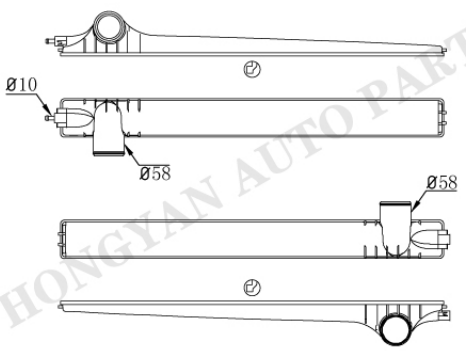

TRSC-0004

Tank size :(R7×5×5.5×72×719)
OEM :570473
DPI :
NISSENS :64068A 67288
APPLICATION :
SCANIA P94/P95/P124

TRSC-0005

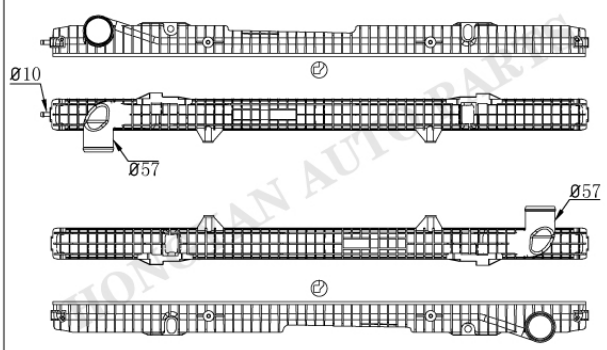

TRSC-0006

Tank size :(R8×5.4×5×59.5×1023)
OEM :1741588 1527653
DPI :
NISSENS :64067A
APPLICATION :
SCANIA R/T SERIES

TRSC-0007

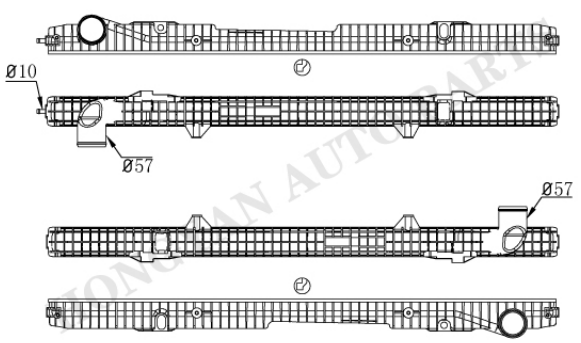

TRSC-0008

Tank size :(R8×5.4×5×59.5×953)
OEM :
DPI :
NISSENS :
APPLICATION :

SCANIA

TRSC-0009

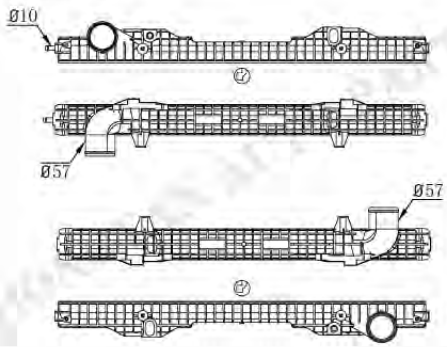

TRSC-0010

Tank size :(R8×5.4×5×59.5×710)
OEM :1491710 1770096
DPI :
NISSENS :67259A
APPLICATION :
04- SCANIA BUS/P SERIES

TRSC-0011

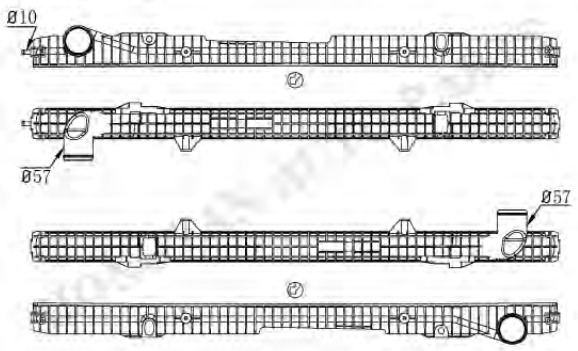

TRSC-0012

Tank size :(R8×5.4×5×59.5×1023)
OEM :1741588 1527653
DPI :
NISSENS :64067A
APPLICATION :
SCANIA R/T SERIES

TRSC-0013

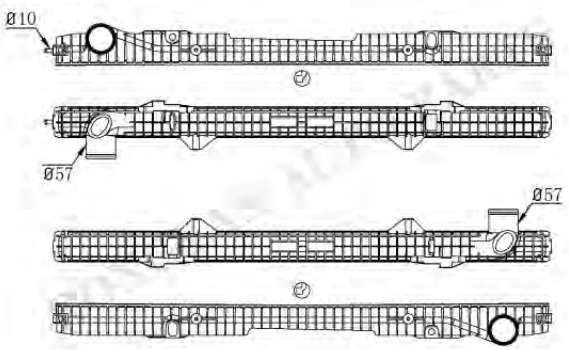

TRSC-0014

Tank size :(R8×5.4×5×59.5×953)
OEM :
DPI :
NISSENS :
APPLICATION :

TRSC-0015

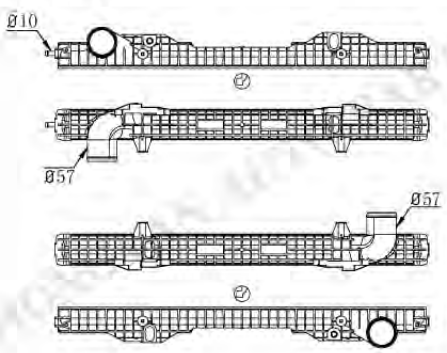

TRSC-0016

Tank size :(R8×5.4×5×59.5×710)
OEM :
DPI :
NISSENS :
APPLICATION :

TRSC-2

TRSC-0017

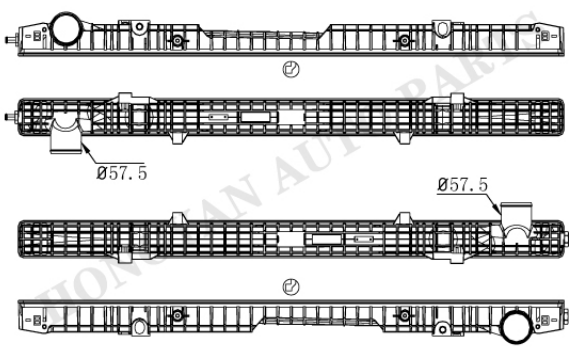

TRSC-0018

Tank size :(R10×5.5×5×67.5×1027.5)
OEM :1526653
DPI :
NISSENS :
APPLICATION :
05- SCANTA RSERIES

TRSC-0019

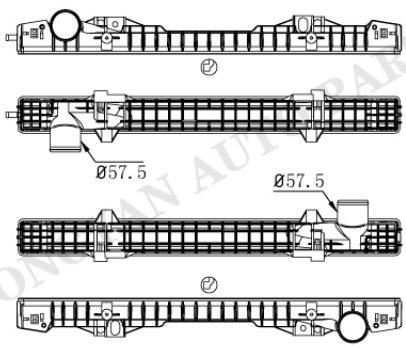

TRSC-0020

Tank size :(R10×5×4.5×67×719)
OEM :1491710 1766125 1784615
DPI :
NISSENS :
APPLICATION :
04-09 SCANTA DIESEL

Tank size :
OEM :
DPI :
NISSENS :
APPLICATION :

Tank size :
OEM :
DPI :
NISSENS :
APPLICATION :

HONGYAN AUTO PARTS

VOLVO

TRVO-0001

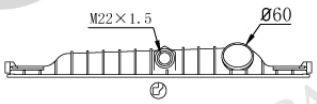

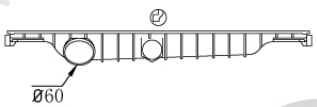

TRVO-0002

Tank size :(R5×5×4×70×568)
OEM :
DPI :
NISSENS :
APPLICATION :

TRVO-0003

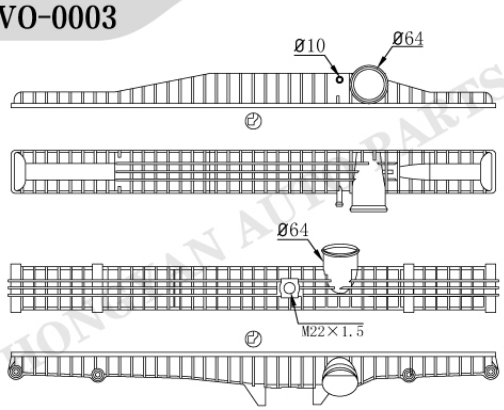

TRVO-0004

Tank size :(R9×5×7×81×911)
OEM :1676543 1676436
1276435 1665249
DPI :
NISSENS :
APPLICATION :
89-01 TERBERG FH

TRVO-0003

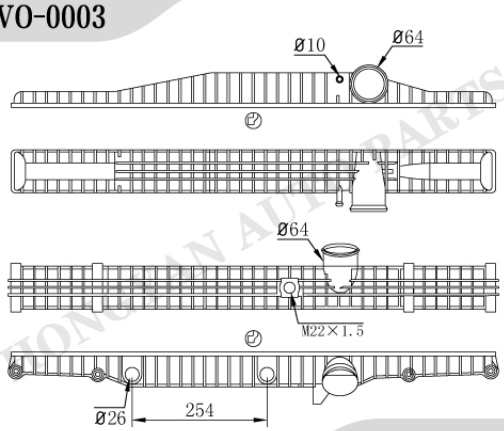

TRVO-0005AT/MT

Tank size :(R9×5×7×81×911)
OEM :1003579 20984815 20733351
DPI :
NISSENS :
APPLICATION :
CXP SERIES

TRVO-0006

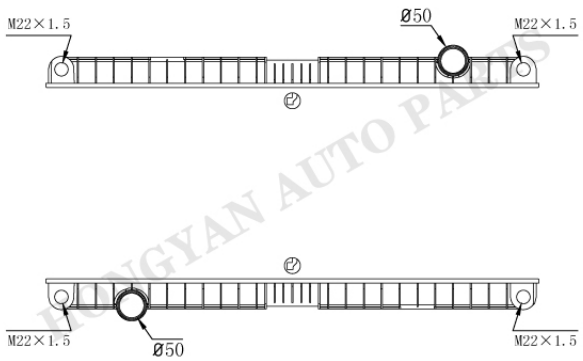

TRVO-0006

Tank size :(R5.5×5×6.5×70.5×827.5)
OEM :
DPI :
NISSENS :
APPLICATION :
VOLVO BUS

HONGYAN AUTO PARTS

TRVO-1

TRVO-0007

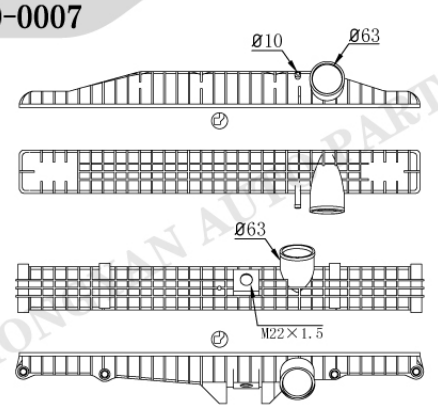

TRVO-0008

Tank size :(R8.5×5×6.5×81×752)
OEM :1665249 1676436 20460178
DPI :
NISSENS :
APPLICATION :
93-00 VOLVO F12

TRVO-0009

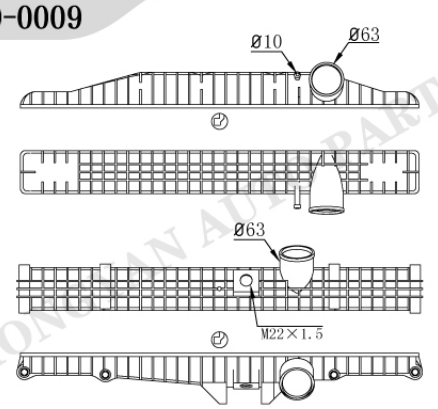

TRVO-0010

Tank size :(R5.5×3×7×77×748)
OEM :
DPI :
NISSENS :
APPLICATION :
93-00 VOLVO F12

TRVO-0011

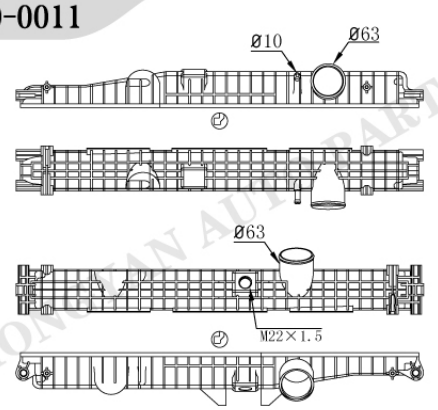

TRVO-0012

Tank size :(R5.5×3×7×77×748)
OEM :
DPI :
NISSENS :
APPLICATION :
12- VOLVO F12

TRVO-0013

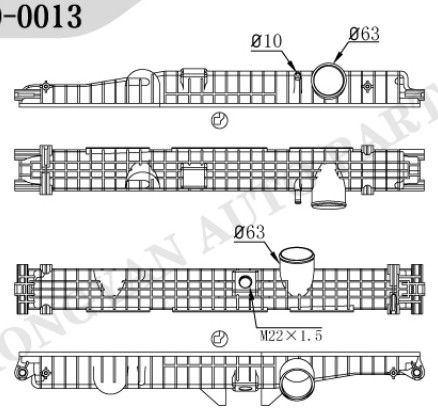

TRVO-0014

Tank size :(R8.5×5×6.5×81×752)
OEM :
DPI :
NISSENS :
APPLICATION :
12- VOLVO F12

HONGYAN AUTO PARTS

VOLVO

TRVO-0015

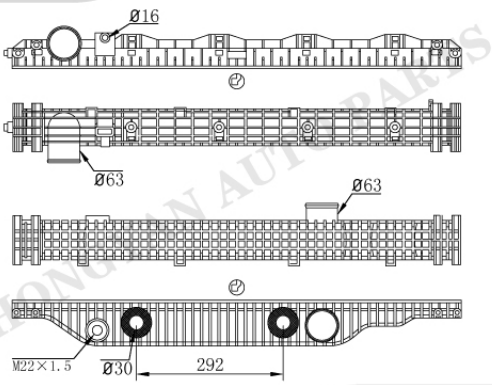

TRVO-0016AT/MT

Tank size :(R8×5×5.3×71.5×893)
OEM :
DPI :
NISSENS :
APPLICATION :
05-06 VOLVO VN-SERIES

TRVO-0017

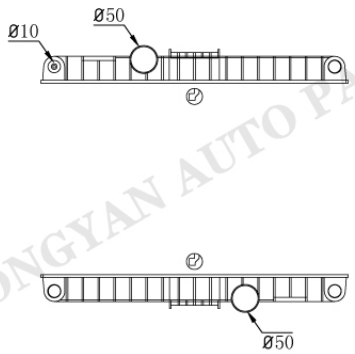

TRVO-0018

Tank size :(R5×70.6×578)
OEM :3018818 8112681/786
DPI :
NISSENS :
APPLICATION :
92- VOLVO B10M/B10B

TRVO-0015

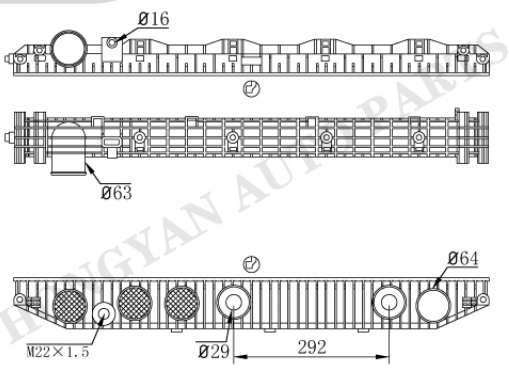

TRVO-0019AT/MT

Tank size :(R8×5×5.3×71.5×893)
OEM :
DPI :
NISSENS :
APPLICATION :
VOLVO VN-SERIES

TRVO-0015

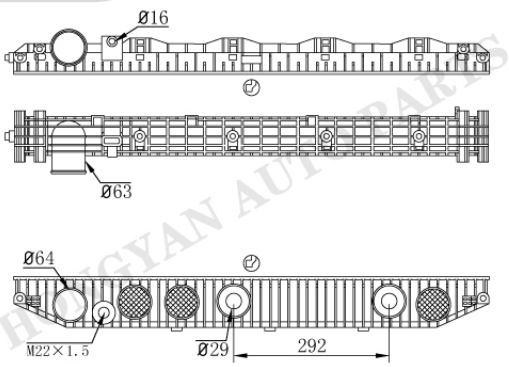

TRVO-0020AT/MT

Tank size :(R8×5×5.3×71.5×893)
OEM :
DPI :
NISSENS :
APPLICATION :
VOLVO VN-SERIES

TRVO-3

HONGYAN AUTO PARTS

TRVO-0021

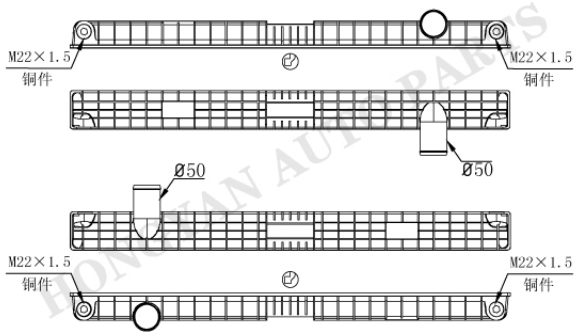

TRVO-0021

Tank size :(R5.5×5×6.5×70.5×828)
OEM :70320673 85000399
DPI :
NISSENS :
APPLICATION :
VOLVO BUS

TRVO-0022

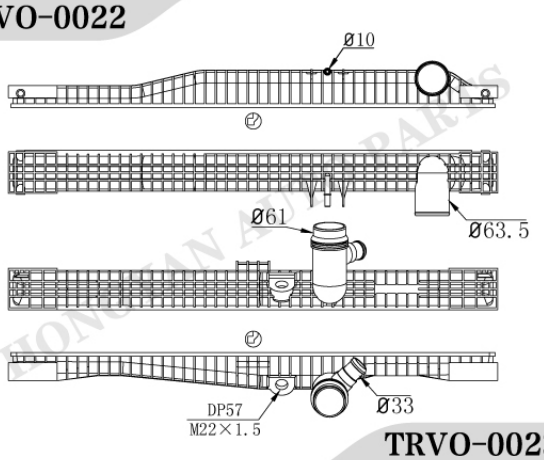

TRVO-0023

Tank size :(R10×4.5×7×70.5×911)
OEM :85013015 22062259
DPI :
NISSENS :
APPLICATION :
VOLVO BUS

TRVO-0022

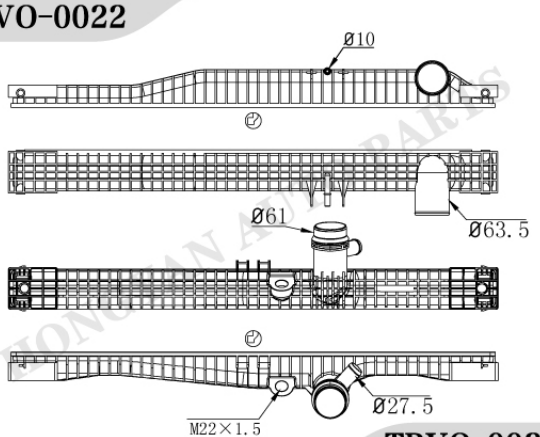

TRVO-0024

Tank size :(R10×4.5×7×70.5×911)
OEM :85013015 22062259
DPI :
NISSENS :
APPLICATION :
VOLVO BUS

Tank size :
OEM :
DPI :
NISSENS :
APPLICATION :

HONGYAN AUTO PARTS

TRUCK

TR-0001

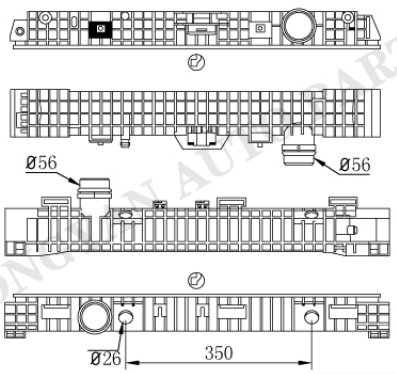

TR-0002AT/MT

Tank size :(R6×6.5×5×80.6×690.2)
OEM :
DPI :
NISSENS :
APPLICATION :

TR-0003

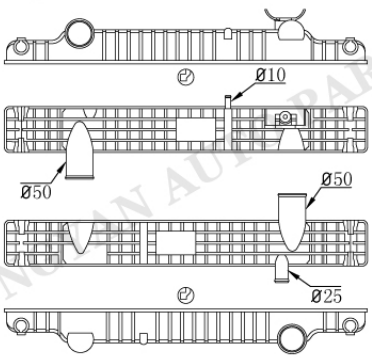

TR-0004

Tank size :(R6×6.6×6×86×682.6)
OEM :
DPI :
NISSENS :
APPLICATION :

TR-0005

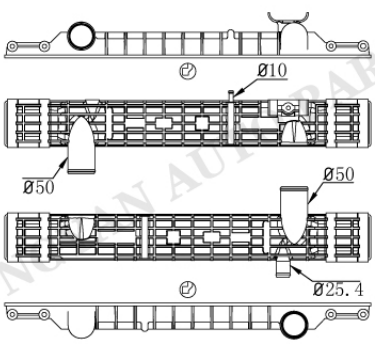

TR-0006

Tank size :(R5×4.7×6×87×688)
OEM :
DPI :
NISSENS :
APPLICATION :

TR-0007

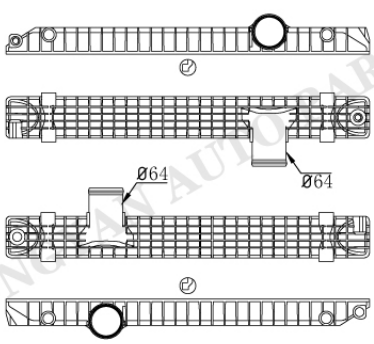

TR-0008

Tank size :(R9×5×5.5×78×682.5)
OEM :
DPI :
NISSENS :
APPLICATION :

TR-0009

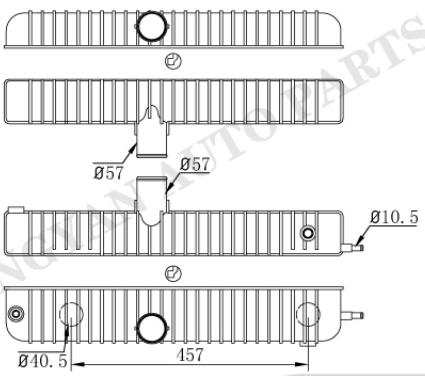

TR-0010AT/MT

Tank size :(R10×6×5.5×86×653.5)
OEM :
DPI :
NISSENS :
APPLICATION :

TR-0011

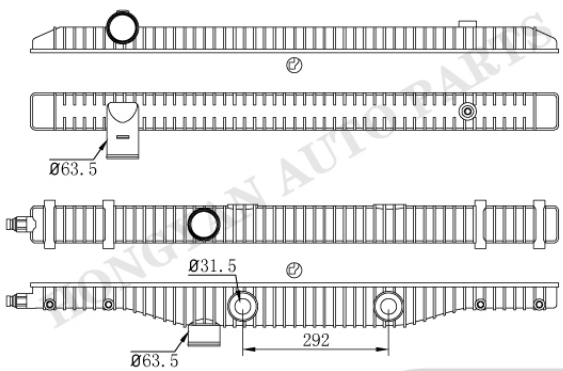

TR-0012AT/MT

Tank size :(R10×6×7.5×74×1056)
OEM :
DPI :
NISSENS :
APPLICATION :

TR-0013

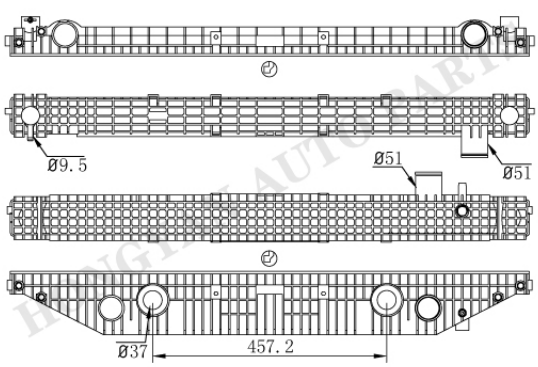

TR-0014AT/MT

Tank size :(R7×5.5×5×72.5×1014)
OEM :
DPI :
NISSENS :
APPLICATION :

TR-0013

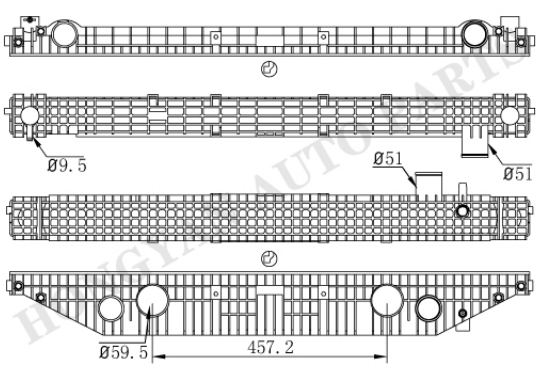

TR-0014-1AT

Tank size :(R7×5.5×5×72.5×1014)
OEM :
DPI :
NISSENS :
APPLICATION :

TRUCK

TR-0015

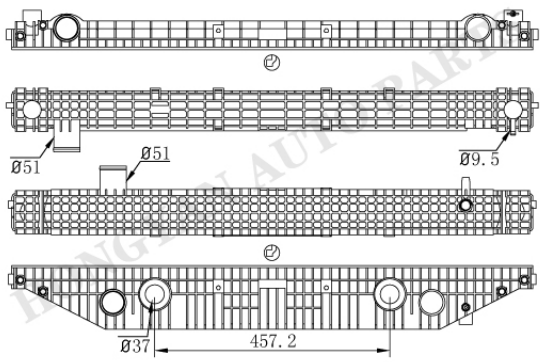

TR-0016AT/MT

Tank size :(R7×5.5×5×72.5×1014)
OEM :
DPI :
NISSENS :
APPLICATION :

TR-0015

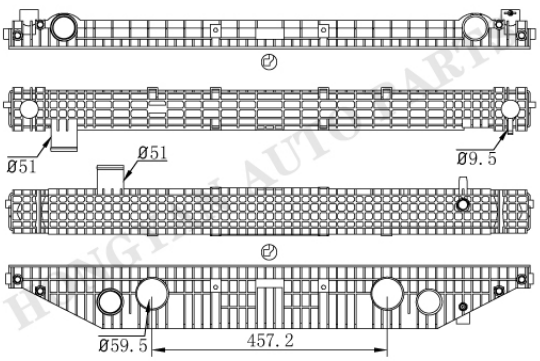

TR-0016-1AT

Tank size :(R7×5.5×5×72.5×1014)
OEM :
DPI :
NISSENS :
APPLICATION :

TR-0017

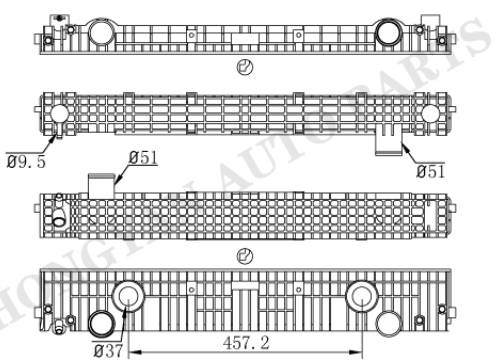

TR-0018AT/MT

Tank size :(R7×5.5×5×72.5×804)
OEM :
DPI :
NISSENS :
APPLICATION :

TR-0017

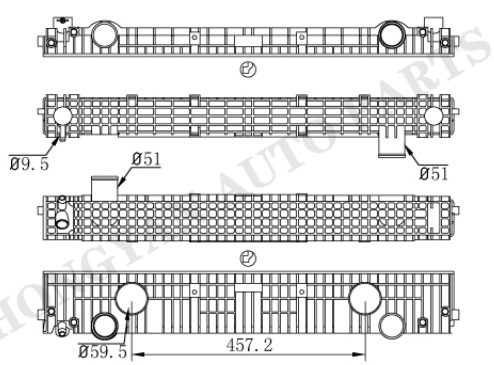

TR-0018-1AT

Tank size :(R7×5.5×5×72.5×804)
OEM :
DPI :
NISSENS :
APPLICATION :

TR-0019

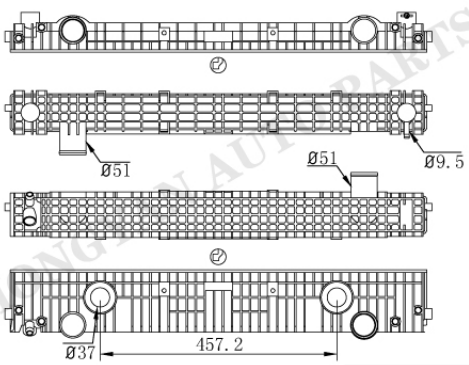

TR-0020AT/MT

Tank size :(R7×5.5×5×72.5×804)
OEM :
DPI :
NISSENS :
APPLICATION :

TR-0019

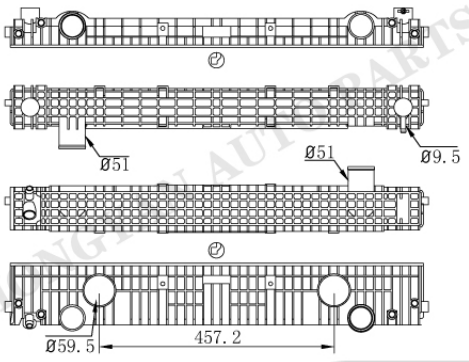

TR-0020-1AT

Tank size :(R7×5.5×5×72.5×804)
OEM :
DPI :
NISSENS :
APPLICATION :

TR-0021

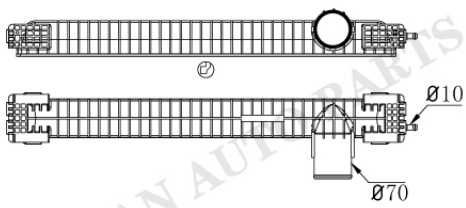

Tank size :(R7.5×5×5×73×714)
OEM :
DPI :
NISSENS :
APPLICATION :
TRUCK

TR-0023

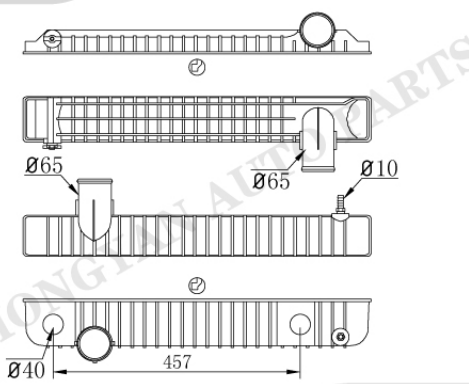

TR-0024AT/MT

Tank size :(R10×5.8×5.4×85.5×653)
OEM :
DPI :
NISSENS :
APPLICATION :
TRUCK

TRUCK

TR-0025

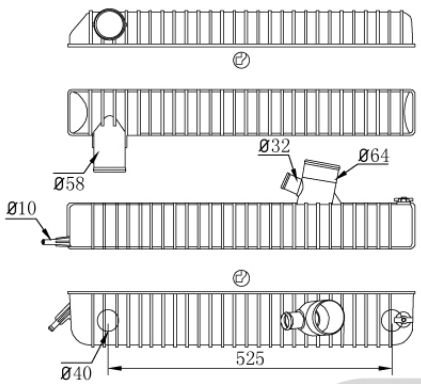

TR-0026AT/MT

Tank size :(R10×5.8×5.4×85.5×653)
OEM :
DPI :
NISSENS :
APPLICATION :
TRUCK

TR-0027

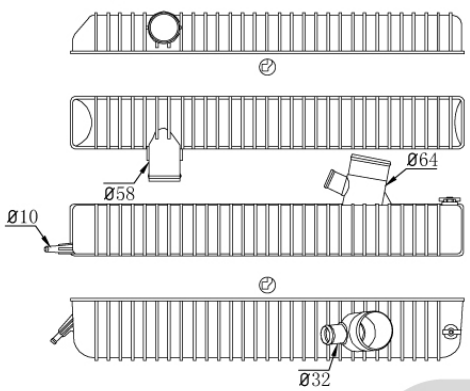

TR-0028

Tank size :(R10×5.5×5.4×85.5×740)
OEM :
DPI :
NISSENS :
APPLICATION :
TRUCK

Tank size :
OEM :
DPI :
NISSENS :
APPLICATION :

Tank size :
OEM :
DPI :
NISSENS :
APPLICATION :

	Tank size : OEM : DPI : NISSENS : APPLICATION :
	Tank size : OEM : DPI : NISSENS : APPLICATION :
	Tank size : OEM : DPI : NISSENS : APPLICATION :
	Tank size : OEM : DPI : NISSENS : APPLICATION :

HONGYAN AUTO PARTS

INTERCOOLER

INBM-0001

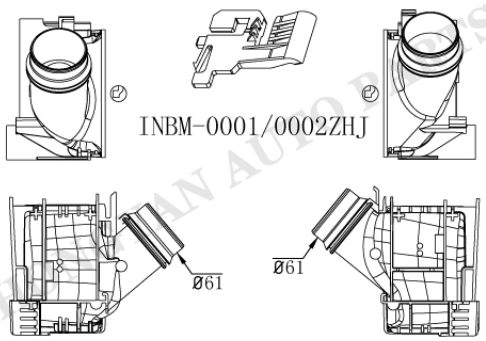

INBM-0002

Tank size :(R6×3.3×4×89.3×136.7)
OEM :
DPI :
NISSENS :96552
APPLICATION :
11- BMW 1 F20/F21
12- BMW 2 F22
11- BMW 3 F30/F31/F35/F80
13- BMW 4 F32/F33/F36/82

INBM-0003

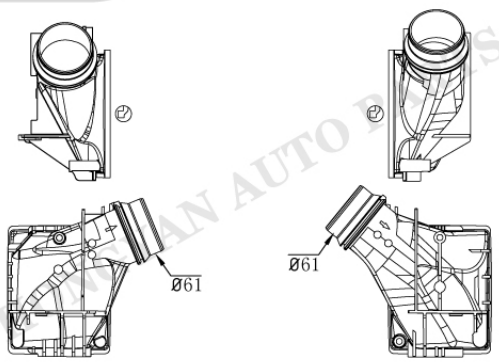

INBM-0004

Tank size :(R5.5×3.5×5.5×110×138)
OEM :
DPI :
NISSENS :
APPLICATION :
13- BMW 5 F18

INBM-0005

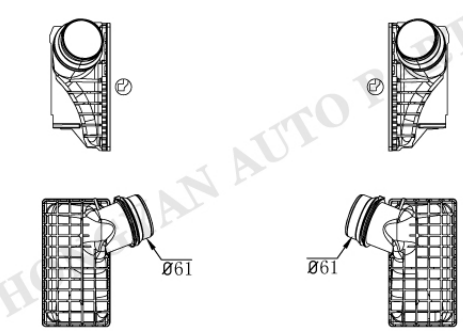

INBM-0006

Tank size :(R5.5×5×5.5×95×174)
OEM :
DPI :
NISSENS :
APPLICATION :
BMW 7 F02

INBM-0007

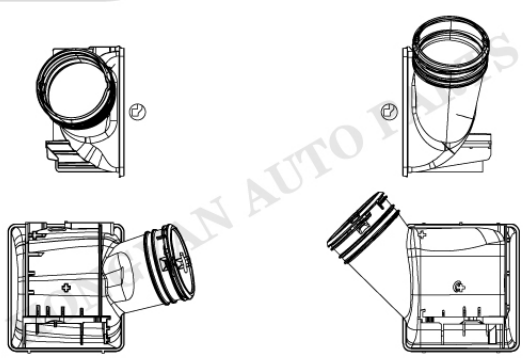

INBM-0008

Tank size :(R9×4.5×5.5×124.5×134)
OEM :
DPI :
NISSENS :
APPLICATION :
BMW X1 X2 E89 E90

INBM-1

INTERCOOLER

INBM-0009

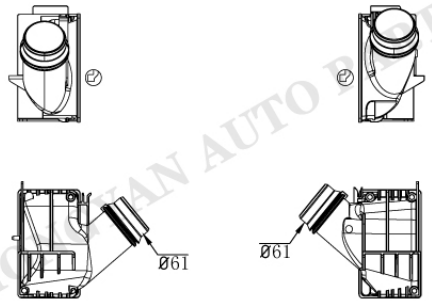

INBM-0010

Tank size :(R6×3.5×4×89×150.5)
OEM :
DPI :
NISSENS :
APPLICATION :
BMW X3 X4 F25

INBM-0011

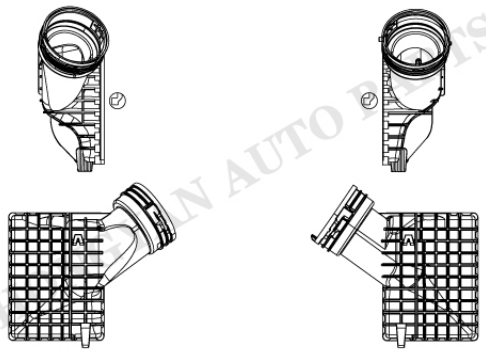

INBM-0012

Tank size :(R5.5×4×5.5×122.5×160.5)
OEM :
DPI :
NISSENS :
APPLICATION :
BMW X5 X6 E70 E71

INBM-0013

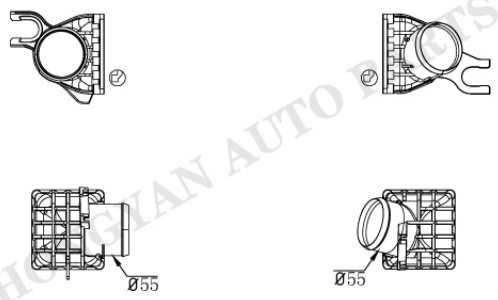

INBM-0014

Tank size :(R5.5×4×5.5×79×85.5)
OEM :
DPI :
NISSENS :
APPLICATION :
BMW MINI



Tank size :
OEM :
DPI :
NISSENS :
APPLICATION :

HONGYAN AUTO PARTS

INFA

INFA-0001

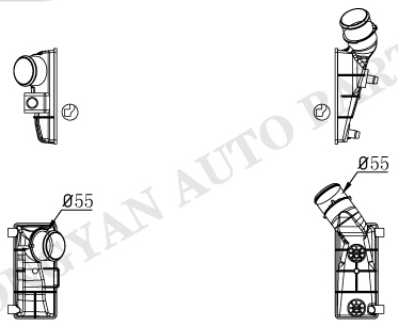

INFA-0002

Tank size :(R7.5×4.5×5×80.5×179.5)
OEM :46744880 60619007
DPI :
NISSENS :96698 96699
APPLICATION :
00-01 ALFA ROMEO 147
97-00 ALFA ROMEO 156
03-04 ALFA ROMEO GT

Tank size :
OEM :
DPI :
NISSENS :
APPLICATION :

Tank size :
OEM :
DPI :
NISSENS :
APPLICATION :

Tank size :
OEM :
DPI :
NISSENS :
APPLICATION :

HONGYAN AUTO PARTS

INFI-0001

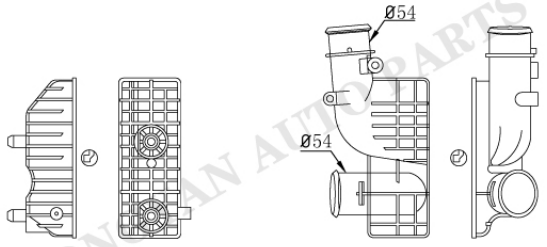

INFI-0002

Tank size :(R7×4.5×5×81×209)
OEM :0384E4 0384G8 1307012080
DPI :
NISSENS :96889
APPLICATION :
94-07 FIAT DUCATO
94-09 CITROEN JUMPER/RELAY
94-06 PEUGEOT BOXER

INFI-0003

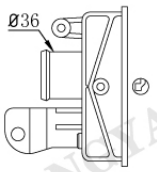

Tank size : (R8.5×4.5×5×59.5×121)
OEM :
DPI :
NISSENS :96600
APPLICATION :
05- FIAT PALIO

INFI-0004

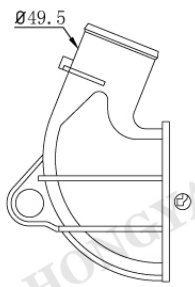

Tank size : (R10×4.5×5×71.5×104.4)
OEM :
DPI :
NISSENS :96736
APPLICATION :
01- FIAT DOBLO

Tank size :
OEM :
DPI :
NISSENS :
APPLICATION :

HONGYAN AUTO PARTS

FORD

INFO-0001

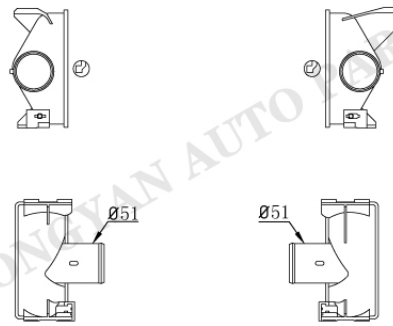

INFO-0002

Tank size : (R6.5×4.8×5.2×68.5×152)
OEM :
DPI :
NISSENS :
APPLICATION :
98-02 FORD RANGER 2.5TD

INFO-0003

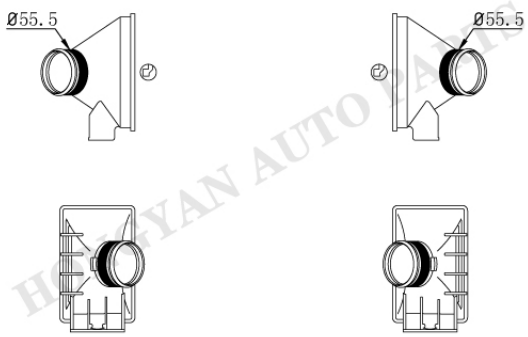

INFO-0004

Tank size : (R6.5×4.8×5.5×92×144)
OEM :
DPI :
NISSENS :96732
APPLICATION :
00- FORD TRANSIT 2.0TD

INFO-0005

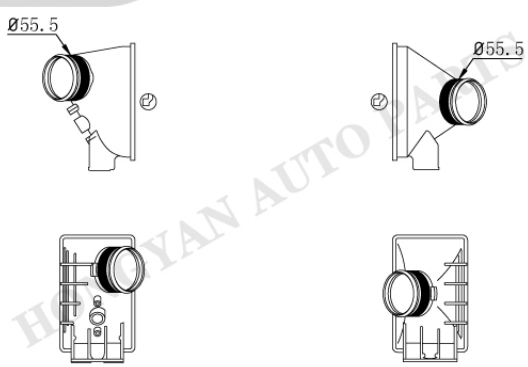

INFO-0004

Tank size : (R6.5×4.8×5.5×92×144)
OEM :1671445 4432117
DPI :
NISSENS :96642
APPLICATION :
00- FORD TRANSIT 2.0TD

INFO-0006

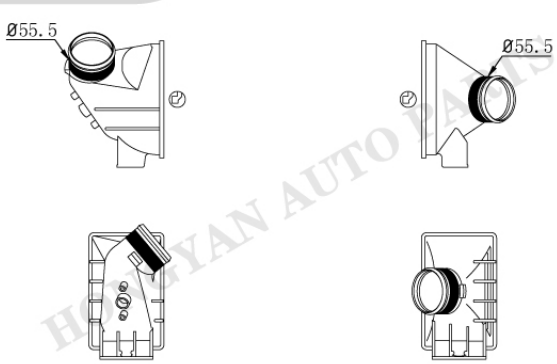

INFO-0004

Tank size :(R6.5×4.8×5.5×92×144)
OEM :1671443 4126928
DPI :
NISSENS :96733
APPLICATION :
00- FORD TRANSIT 2.0TD

INFO-1

HONGYAN AUTO PARTS

INFO-0007

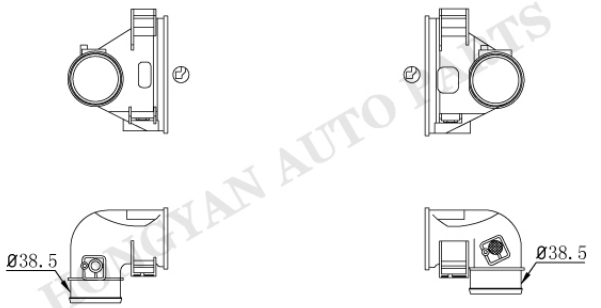

INFO-0008

Tank size :(R4×4×5×80.7×155.5)
OEM :1423959 1462995 1674066
DPI :
NISSENS :96561
APPLICATION :
05-15 FORD FOCUS
07-12 FORD MONDEO
06-11 FORD S-MAX
06-10 VOLVO S80/V70
11-15 LAND ROVER FRDDLANDER

INFO-0009

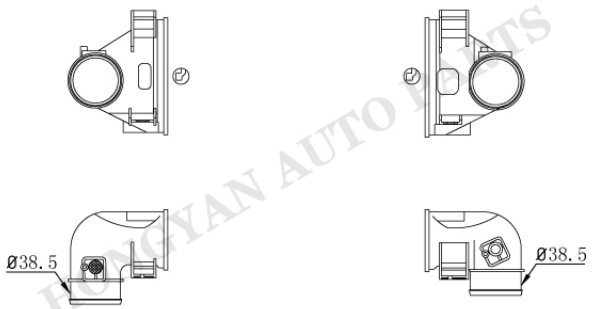

INFO-0010

Tank size :(R4×4×5×80.7×155.5)
OEM :
DPI :
NISSENS :
APPLICATION :
05-15 FORD FOCUS
07-12 FORD MONDEO
06-11 FORD S-MAX
06-10 VOLVO S80/V70
11-15 LAND ROVER FRDDLANDER

INFO-0011

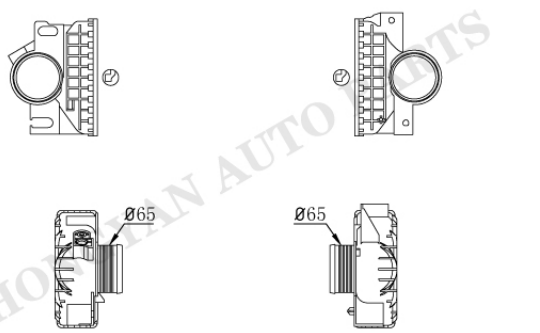

INFO-0012

Tank size :(R5.5×4×5.5×55×161)
OEM :
DPI :
NISSENS :
APPLICATION :
13- FORD FUSION 2.0L

INFO-0013

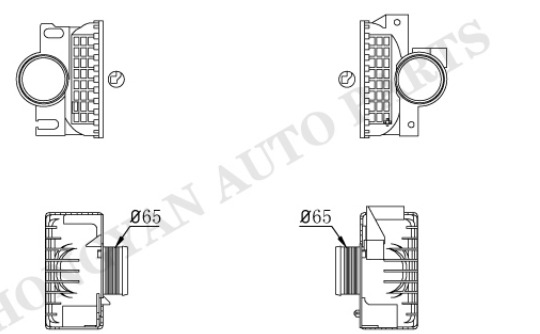

INFO-0014

Tank size :(R5.5×4×5.5×79×161)
OEM :
DPI :
NISSENS :
APPLICATION :
13- FORD FUSION 2.0L

HONGYAN AUTO PARTS

FORD

INFO-0015

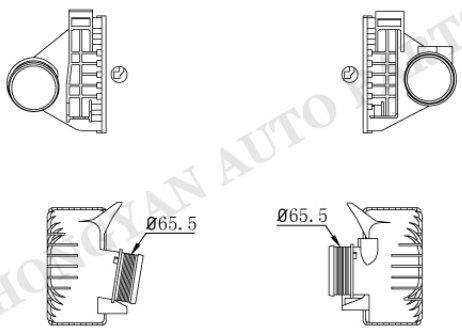

INFO-0016

Tank size : (R5.5×4×5.5×79×161)
OEM :
DPI :
NISSENS :
APPLICATION :
FORD ESCAPE 1.6L

INFO-0017

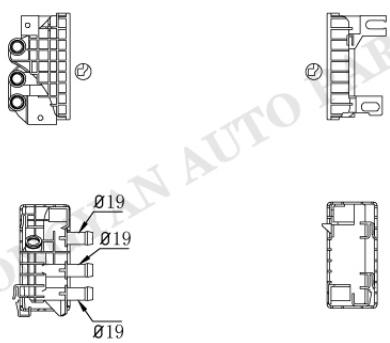

INFO-0018

Tank size : (R5.5×4×5.5×76×162.6)
OEM :
DPI :
NISSENS :
APPLICATION :

INFO-0019

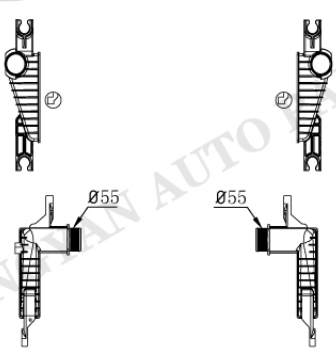

INFO-0020

Tank size : (R6×4×5×55.5×223.5)
OEM :
DPI :
NISSENS :
APPLICATION :
FORD PICK UP

INFO-0021

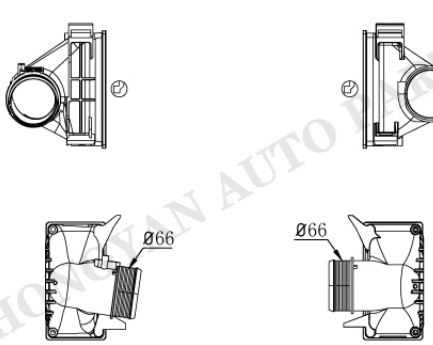

INFO-0022

Tank size : (R4.5×4×5×81×156)
OEM :
DPI :
NISSENS :
APPLICATION :

HONGYAN AUTO PARTS

INFO-0023

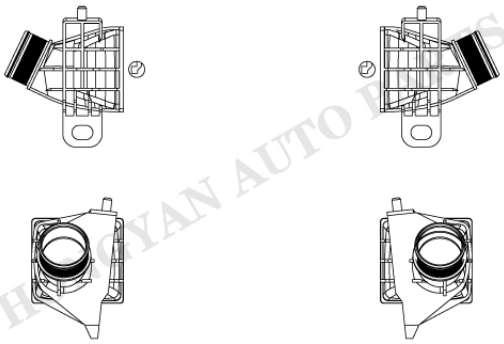

INFO-0024

Tank size :(R4×4×5×98×105)
OEM :1222890 1313503
DPI :
NISSENS :96702
APPLICATION :
00-03 FORD MONDEO

INFO-0025

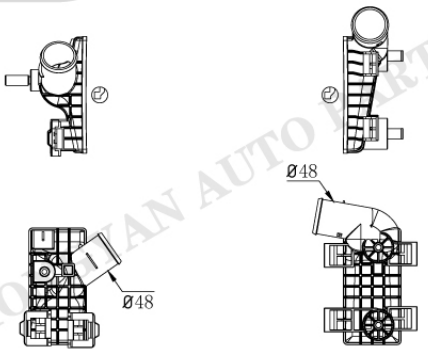

INFO-0026

Tank size : (R5.5×4×5.5×79.3×161)
OEM :CV6191440VC
DPI :
NISSENS :
APPLICATION :
FORD FOCUS 1.0LT

INFO-0027

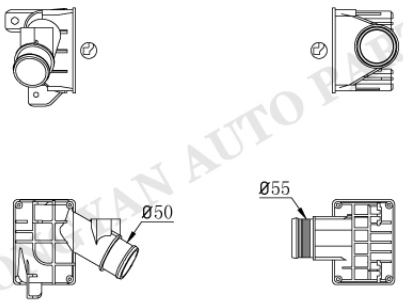

INFO-0028

Tank size :(R6×3.2×4×89×122)
OEM :
DPI :4401-1531
NISSENS :
APPLICATION :
12-14 EDGE 2.0 L

INFO-0029

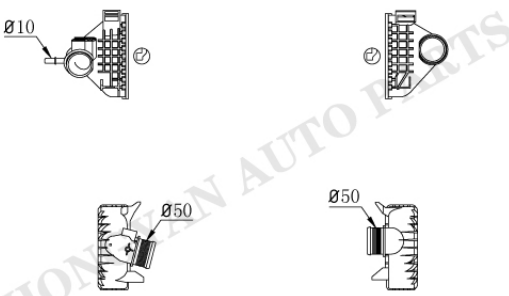

INFO-0030

Tank size :(R5.5×4×5.5×55×161)
OEM :1721228 1787935 1750001
DPI :
NISSENS :96492
APPLICATION :
10- C-MAX/FOCUSIII/KUGA/TRANSIT

HONGYAN AUTO PARTS

GENERAL MOTOR CORPORATION

INGM-0001

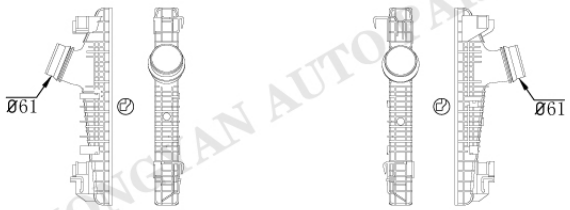

Tank size :(R4.5×3.6×5.6×44×369.5)
OEM :16451630 1302133
13267647
DPI :
NISSENS :96557
APPLICATION :
09- CHEVROLET CRUZE 1.7/2.0L

INGM-0002

INGM-0003

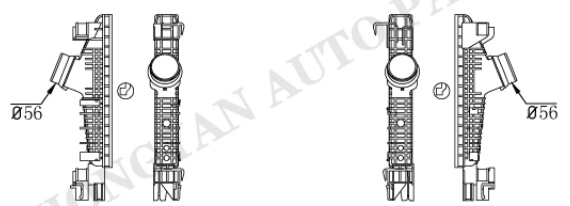

Tank size :(R4.5×3.6×5.6×44×287)
OEM :13330387 1302148
13311080
DPI :
NISSENS :96555
APPLICATION :
11- CHEVROLET CRUZE 1.4L

INGM-0004

INGM-0005



Tank size :(R4.5×3.6×5.6×44×287)
OEM :1302144
DPI :
NISSENS :96556
APPLICATION :
09- CHEVROLET CRUZE 1.4L

INGM-0006

INGM-0007

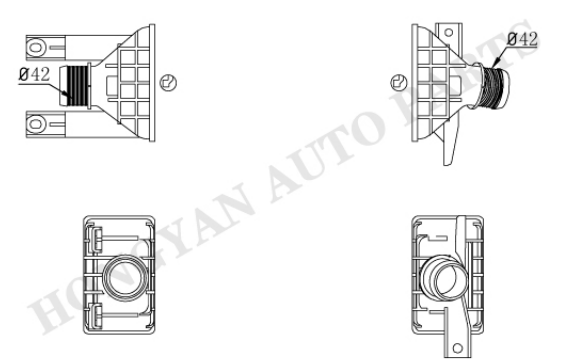

Tank size :(R5×4×5.7×76.5×126.5)
OEM :
DPI :
NISSENS :
APPLICATION :

INGM-0008

HONGYAN AUTO PARTS

GENERAL MOTOR CORPORATION

INGM-0009

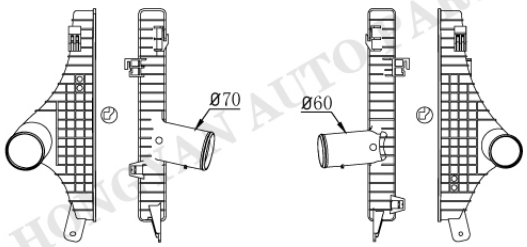

INGM-0010

Tank size :(R9×5×5×50×387.7)
OEM :
DPI :
NISSENS :
APPLICATION :

INGM-0011

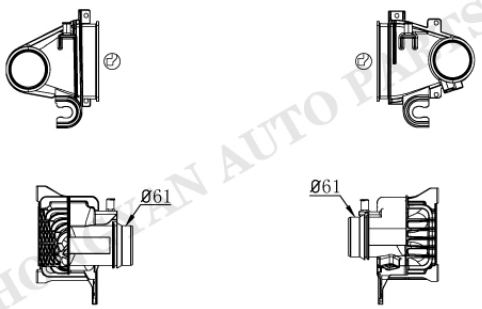

INGM-0012

Tank size :(R6×3.5×4×89.5×122.5)
OEM :
DPI :
NISSENS :
APPLICATION :
BULCK

INGM-0013



INGM-0014

Tank size :(R5×4×5.5×46.8×455)
OEM :
DPI :
NISSENS :
APPLICATION :
15- CADILAC XT5

Tank size :
OEM :
DPI :
NISSENS :
APPLICATION :

HONGYAN AUTO PARTS

HYUNDAI

INHY-0001

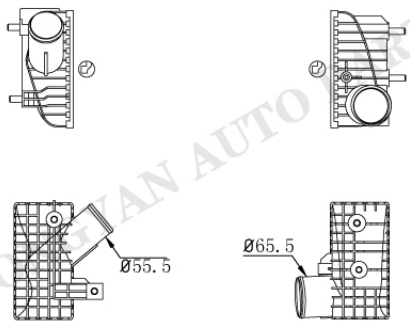

INHY-0002

Tank size : (R5.5×4×5.5×95.5×189)
OEM :
DPI :
NISSENS :
APPLICATION :

Tank size :
OEM :
DPI :
NISSENS :
APPLICATION :

Tank size :
OEM :
DPI :
NISSENS :
APPLICATION :

Tank size :
OEM :
DPI :
NISSENS :
APPLICATION :

HONGYAN AUTO PARTS

INIS-0001

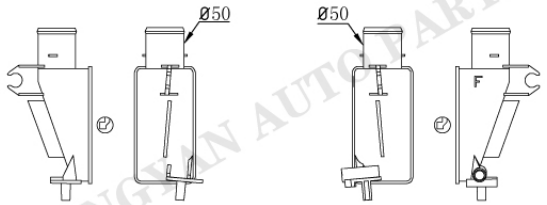

INIS-0002

Tank size :(R9×4.5×4×58.5×155)
OEM :8980906272
DPI :
NISSENS :
APPLICATION :
12- ISUZU D-MAX 2.5/3.0L

INIS-0003



INIS-0004

Tank size :(R9×5×4.5×80×155)
OEM :
DPI :
NISSENS :
APPLICATION :
12- ISUZU D-MAX

Tank size :
OEM :
DPI :
NISSENS :
APPLICATION :

Tank size :
OEM :
DPI :
NISSENS :
APPLICATION :

HONGYAN AUTO PARTS

IVECO

INIV-0001

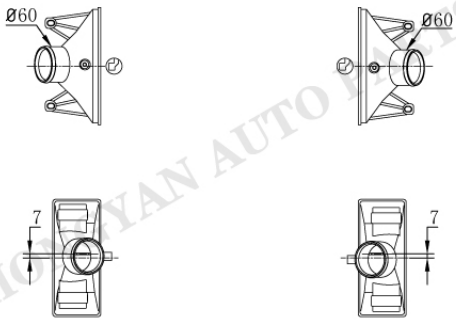

INIV-0002

Tank size :(R4.5×4×4.7×81×198)
OEM :
DPI :
NISSENS :
APPLICATION :
99- IVECO DAILY

Tank size :
OEM :
DPI :
NISSENS :
APPLICATION :

Tank size :
OEM :
DPI :
NISSENS :
APPLICATION :

Tank size :
OEM :
DPI :
NISSENS :
APPLICATION :

HONGYAN AUTO PARTS

INIV-1

MERCEDES BENZ

INME-0001

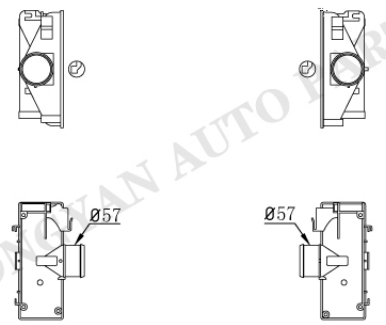

INME-0002

Tank size :(R4.5×4×4.8×81×212)
OEM :2E0145804 9065010101
DPI :
NISSENS :96628
APPLICATION :
06- MERCEDES BENZ SPRINTER

INME-0003

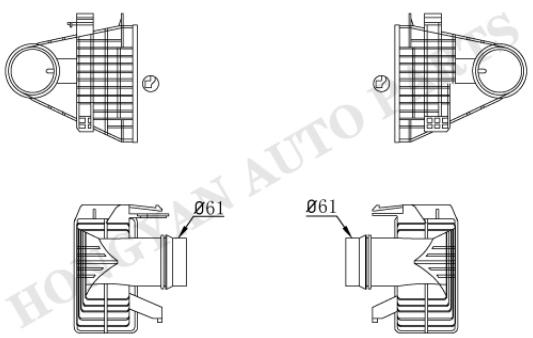

INME-0004

Tank size : (R7.5×4.5×5.5×80.5×149)
OEM :2045000200 A2045000200
DPI :
NISSENS :96534
APPLICATION :
08-15 METCEDES BENZ C180/C220/C320/C350
09-15 METCEDES BENZ E220/E250/E300/E350
08-15 METCEDES BENZ GLK200/GLK220/GLK250

INME-0005

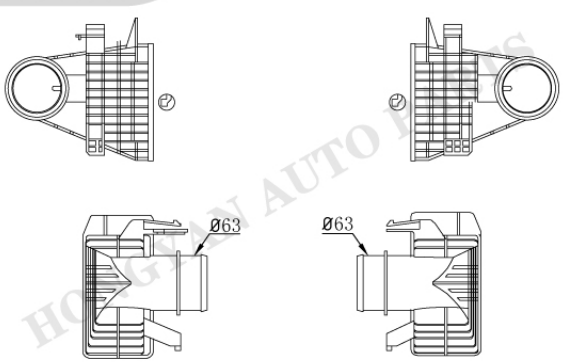

INME-0006

Tank size : (R7.5×4.5×5.5×80.5×134)
OEM :2045000300 A2045000300
DPI :
NISSENS :96597
APPLICATION :
08-12 MERCEDES BENZ C180/C220/320/C350
09-15 MERCEDES BENZ GLK320/GLK350

INME-0007

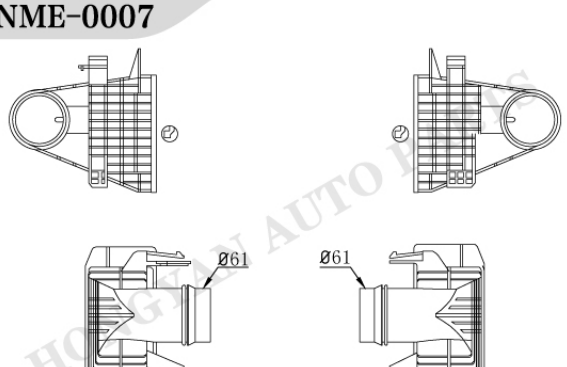

INME-0008

Tank size : (R7.5×4.5×5.5×80.5×134)
OEM :2045000000 A2045000000
DPI :
NISSENS :96598
APPLICATION :
07-15 MERCEDES BENZ C180/C200/C250
09-15 MERCEDES BENZ E200

MERCEDES BENZ

INME-0009

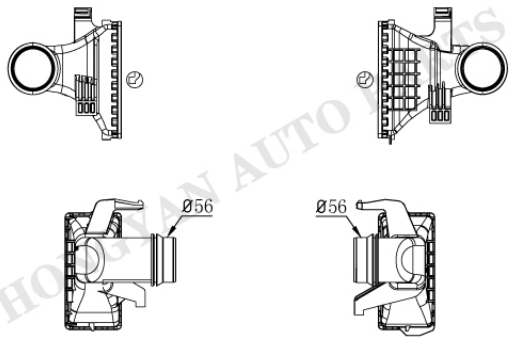

INME-0010

Tank size :(R5.5×4×5.5×73×145.5)
OEM :A2465000100
DPI :
NISSENS :
APPLICATION :
12- MERCEDES A-CLASS W176
12- MERCEDES B-CLASS W246

INME-0011

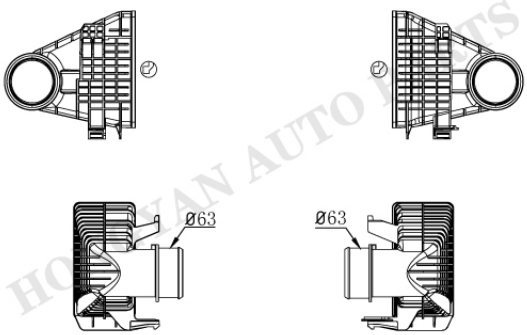

INME-0012

Tank size :(R7.5×4.5×5.5×80.5×149.5)
OEM :2045000300
DPI :
NISSENS :
APPLICATION :
07- MERCEDES C-CLASS W204

INME-0012



INME-0012

Tank size :(R10.5×4.5×5.4×80×209)
OEM :
DPI :
NISSENS :
APPLICATION :
BENZ SPPINTER

Tank size :
OEM :
DPI :
NISSENS :
APPLICATION :

HONGYAN AUTO PARTS

INME-2

INPE-0001

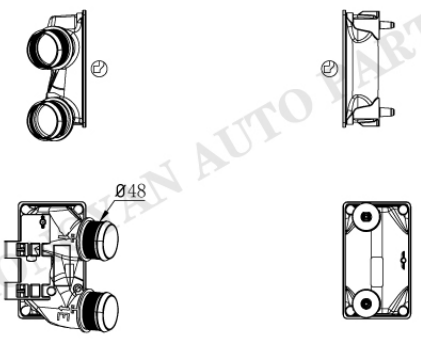

INPE-0002

Tank size :(R6×3.5×4×89×150.5)
OEM :
DPI :
NISSENS :
APPLICATION :
PEGUETO 307/308/408/508/2008/3008

INPE-0003

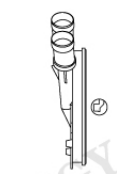

Tank size :(R5×4×5×48×159)
OEM :
DPI :
NISSENS :
APPLICATION :
PEGUETO 206

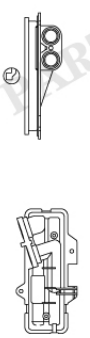

INPE-0006

Tank size :(R5.5×4.5×5×49×156)
OEM :6448J8
DPI :
NISSENS :71152
APPLICATION :
PEGUETO C5 1.8L

Tank size :
OEM :
DPI :
NISSENS :
APPLICATION :

HONGYAN AUTO PARTS

MERCEDES BENZ

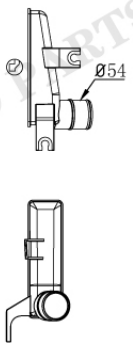

Tank size :(R10×4.5×4.5×68×222)
OEM :
DPI :
NISSENS :
APPLICATION :
MITSUBISHI L200

INMI-0002

INMI-0003

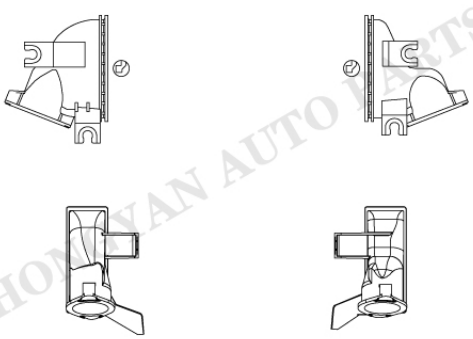

Tank size :(R4×5.5×4.5×63×161)
OEM :
DPI :
NISSENS :
APPLICATION :
13- INTERCOOLER PICK UP L200

INMI-0004

INMI-0005

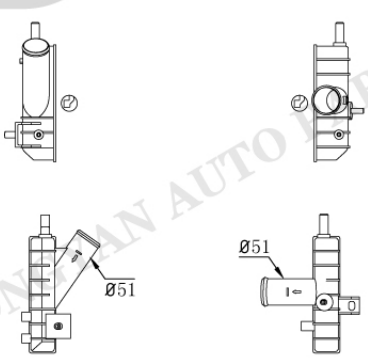

Tank size :(R4.5×4×5×52×226)
OEM :
DPI :
NISSENS :
APPLICATION :
INTERCOOLER FENGXING

INMI-0006

Tank size :
OEM :
DPI :
NISSENS :
APPLICATION :

HONGYAN AUTO PARTS

INMI-1

INNI-0001

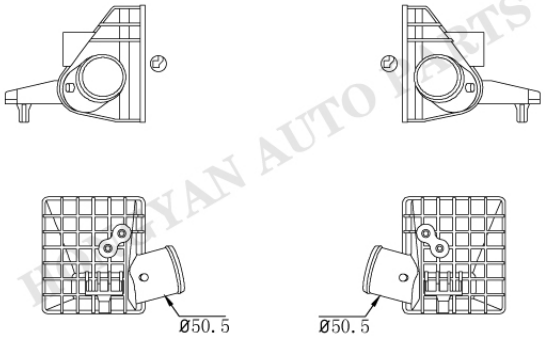

INNI-0002

Tank size :(R6.5×5×5×111×126.5)
OEM :
DPI :
NISSENS :
APPLICATION :

INNI-0003

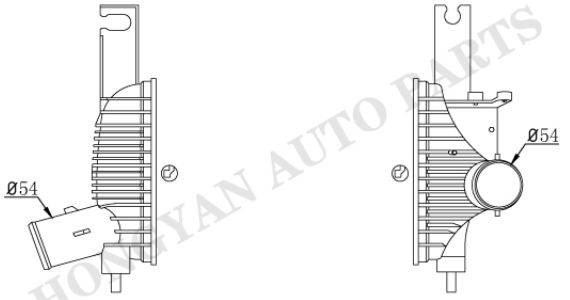

INNI-0004

Tank size :(R5×5×5.5×78.3×206)
OEM :
DPI :
NISSENS :
APPLICATION :
NISSAN

INNI-0005

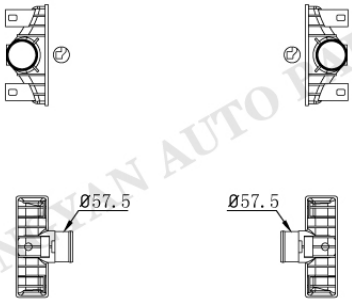

INNI-0006

Tank size :(R4.5×4.5×5.5×60×190.5)
OEM :9161147
DPI :
NISSENS :96890
APPLICATION :
02-03 NISSAN INTERSTAR
98-03 RENAULT MASTER

INNI-0007

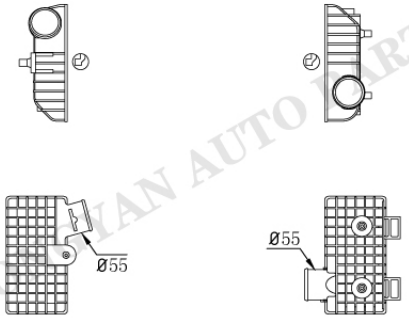

INNI-0008

Tank size :(R6.5×5×5×110.5×212)
OEM :
DPI :
NISSENS :
APPLICATION :

VOLKSWAGEN/AUDI

INVW-0001

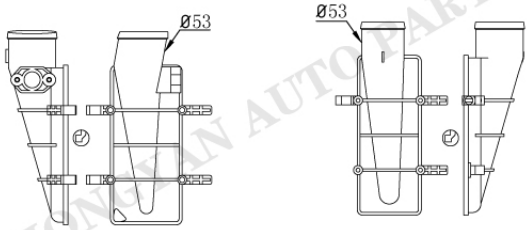

INVW-0002

Tank size :(R7×4.5×5×80.3×179)
OEM :058145805A/B
DPI :
NISSENS :96896
APPLICATION :
97-05 AUDI A6/S6 1.8L
94-01 AUDI A4/S4 1.9/2.8L
96-00 VOLKSWAGEN PASSAT 1.8/1.9L

INVW-0003

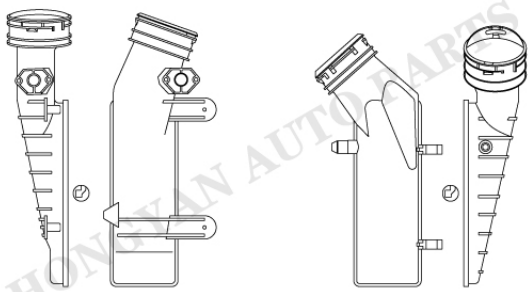

INVW-0004

Tank size : (R7×4.5×5.5×80.5×224)
OEM :3B0145805E/H 8D0145805D
DPI :
NISSENS :96731
APPLICATION :
00-05 VOLKSWAGEN PASSAT 1.8L
01-08 SKODA SUPERB 1.8L

INVW-0005

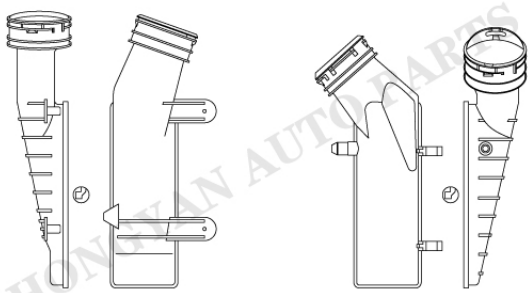

INVW-0004

Tank size : (R7×4.5×5.5×80.5×224)
OEM :
DPI :
NISSENS :96680
APPLICATION :
00-05 VOLKSWAGEN PASSAT 1.8L
01-08 SKODA SUPERB 1.8L

INVW-0006



INVW-0007

Tank size : (R4×4×5.5×81.5×198.5)
OEM :
DPI :
NISSENS :
APPLICATION :
96-01 AUDI A3 1.8L
98-01 VOLKSWAGEN BORA 1.8L
97-01 VOLKSWAGEN GOLF 1.8L
99-01 VOLKSWAGEN JETTA 1.8L

HONGYAN AUTO PARTS

VOLKSWAGEN/AUDI

INVW-0006



INVW-0008

Tank size :(R4×4×5.5×81.5×198.5)
OEM :1J0145805B/D/H
DPI :
NISSENS :96847
APPLICATION :
96-01 AUDI A3 1.8L
98-01 VOLKSWAGEN BORA 1.8L
97-01 VOLKSWAGEN GOLF 1.8L
99-01 VOLKSWAGEN JETTA 1.8L

INVW-0009



INVW-0010

Tank size :(R7×4.5×5×80.5×209)
OEM :4F0145805AA/D
4F0145805J/M/S
DPI :
NISSENS :96544
APPLICATION :
04-11 AUDI A6 2.0L

INVW-0011

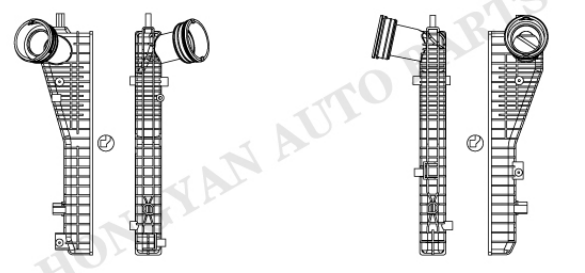

INVW-0012

Tank size :(R5.5×4×5.5×48.7×416.5)
OEM :1K0145803A/B/E/L/S/T
1K0145805G 3C0145805G/P
DPI :
NISSENS :96715
APPLICATION :
03-13 AUDI A3 2.0L
06-13 AUDI TT 2.0L
11-15 VOLKSWAGEN BEETLE 2.0L
03-15 VOLKSWAGEN GOLF 2.0L
05-15 VOLKSWAGEN PASSAT 2.0L

INVW-0013

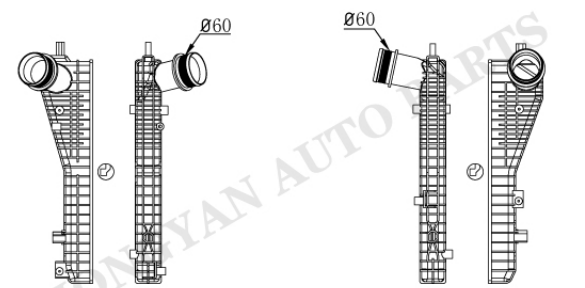

INVW-0014

Tank size :(R5.5×4×5.5×48.7×416.5)
OEM :3C0145805AD/K/N
DPI :
NISSENS :96575
APPLICATION :
09-15 VOLKSWAGEN CC 2.0L
05-15 VOLKSWAGEN PASSAT 2.0L
10-15 VOLKSWAGEN SHARAN 2.0L
08-15 VOLKSWAGEN TIGUAN 2.0L

VOLKSWAGEN/AUDI

INVW-0015

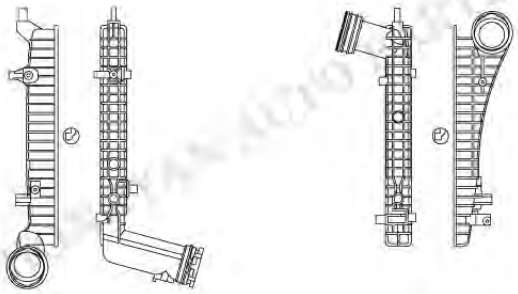

INVW-0016

Tank size :(R5.5×4×5.5×47.8×415)
OEM :1K0145803F/G/H/Q/R
3C0145803D/E/F/G
DPI :
NISSENS :96619
APPLICATION :
03-10 AUDI A3
03-09 VOLKSWAGEN GOLF
05-10 VOLKSWAGEN JETTA
05-10 VOLKSWAGEN PASSAT

INVW-0017

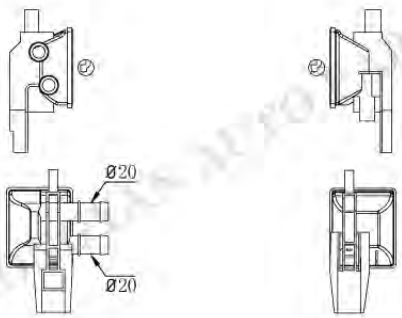

INVW-0018

Tank size :(R4.5×4×5.5×73.5×89)
OEM :6R0145805H
DPI :
NISSENS :65331
APPLICATION :
09- VOLKSWAGEN POLO

INVW-0019

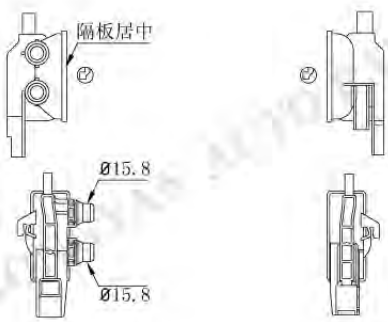

INVW-0020

Tank size :(R5×3×5×46×107)
OEM :5Q0121251EL
DPI :
NISSENS :96318
APPLICATION :
12- VOLKSEAGEN GOLF 1.2L

INVW-0019-1

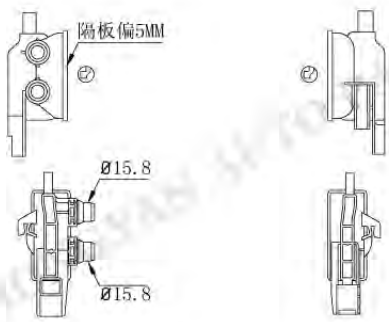

INVW-0020

Tank size :(R5×3×5×46×107)
OEM :5Q0121251EL
DPI :
NISSENS :96318
APPLICATION :
12- VOLKSEAGEN GOLF 1.2L

INVW-3

VOLKSWAGEN/AUDI

INVW-0021

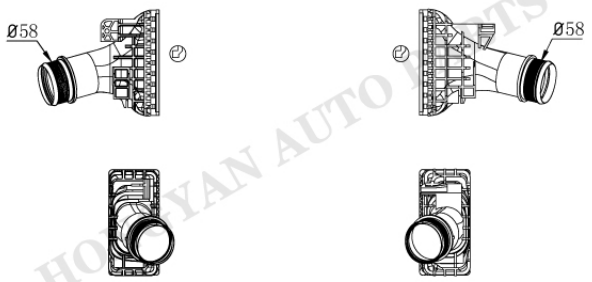

INVW-0022

Tank size :(R5×4.5×5.5×72.5×145.5)
OEM :
DPI :
NISSENS :
APPLICATION :
AUDI A4 A6 Q5 Q7

INVW-0023

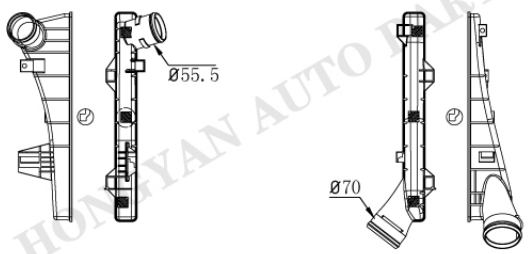

INVW-0024

Tank size :(R9×4.5×4.5×42×394)
OEM :
DPI :
NISSENS :
APPLICATION :

INVW-0025



INVW-0026

Tank size :(R5.5×4×5.5×47.5×366.5)
OEM :
DPI :
NISSENS :
APPLICATION :

Tank size :
OEM :
DPI :
NISSENS :
APPLICATION :

HONGYAN AUTO PARTS

INTA

INTA-0001

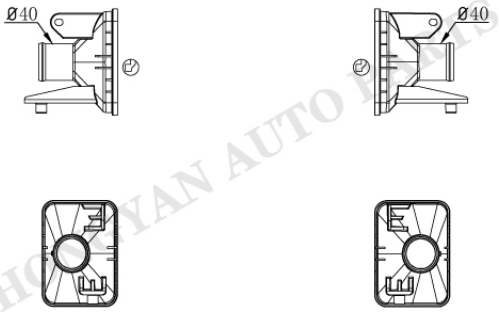

INTA-0002

Tank size :(R13.5×5×6×85×116.5)
OEM :
DPI :
NISSENS :
APPLICATION :
TATA

Tank size :
OEM :
DPI :
NISSENS :
APPLICATION :

Tank size :
OEM :
DPI :
NISSENS :
APPLICATION :

Tank size :
OEM :
DPI :
NISSENS :
APPLICATION :

HONGYAN AUTO PARTS



NINGBO YINZHOU HONG YAN AUTO PARTS FACTORY

ADD：No12-16 north of Dongbei Road,Dongqiao town
industry Zone,Yin zhou county,ningbo city
TEL：0086+574-83082968
Fax：0086+574-88043058
P.C.：315157
http://www.nbhongyan.com
Email:sales1@nbhongyan.com